New Middle School / High School

Seaside School District

1801 S. FRANKLIN STREET, SEASIDE, OR 97138

CONTENTS

architectural

		BP 1	BP 1 - PERMIT SET	BP 2
A0.03	CODE ANALYSIS - EXITING & ALLOWABLE AREA			•
A0.05	CODE ANALYSIS - EXITING			•
A0.07	AIR BARRIER DIAGRAM			•
A0.10	EXTERIOR WALL ASSEMBLIES			•
A1.11	SLAB PLAN LEVEL 1 - SECTOR A1			•
A1.12	SLAB PLAN LEVEL 1 - SECTOR B			•
A1.13	SLAB PLAN LEVEL 1 - SECTOR C			•
A1.21	SLAB PLAN LEVEL 2 - SECTOR A1 + A2			•
A1.22	SLAB PLAN LEVEL 2 - SECTOR B			•
A1.23	SLAB PLAN LEVEL 2 - SECTOR C			•
A2.01	OVERALL FLOOR PLAN - LEVEL 1			•
A2.02	OVERALL FLOOR PLAN - LEVEL 2			•
A2.03	OVERALL FLOOR PLAN - LEVEL 3			•
A2.11	FLOOR PLAN LEVEL 1 - SECTOR A1			•
A2.12	FLOOR PLAN LEVEL 1 - SECTOR B			•
A2.13	FLOOR PLAN LEVEL 1 - SECTOR C			•
A2.21	FLOOR PLAN LEVEL 2 - SECTOR A1+A2			•
A2.22	FLOOR PLAN LEVEL 2 - SECTOR B			•
A2.23	FLOOR PLAN LEVEL 2 - SECTOR C			•
A3.21	BUILDING SECTIONS - SECTOR A			•
A3.22	BUILDING SECTIONS - SECTOR B			•
A3.23	BUILDING SECTIONS - SECTORS B & C			•
A3.24	BUILDING SECTIONS - SECTOR C			•
A3.40	WALL SECTIONS - SECTOR A			•
A3.41	WALL SECTIONS - SECTOR A			•
A3.42	WALL SECTIONS - SECTOR A			•
A3.44	WALL SECTIONS - SECTOR B			•
A3.45	WALL SECTIONS - SECTOR B			•
A3.46	WALL SECTIONS - SECTOR B			•
A3.47	WALL SECTIONS - SECTOR C			•
A3.48	WALL SECTIONS - SECTOR C			•
A3.49	WALL SECTIONS - SECTOR C			•
A3.50	WALL SECTIONS - SECTOR C			•
A4.21	FINISH FLOOR PLAN LEVEL 1 - SECTOR A1			•
A4.22	FINISH FLOOR PLAN LEVEL 1 - SECTOR B			•
A4.23	FINISH FLOOR PLAN LEVEL 1 - SECTOR C			•
A4.24	FINISH FLOOR PLAN LEVEL 2 - SECTOR A1+A2			•
A4.25	FINISH FLOOR PLAN LEVEL 2 - SECTOR B			•
A4.26	FINISH FLOOR PLAN LEVEL 2 - SECTOR C			•
A8.20	FOUNDATION DETAILS			•
A8.22	FOUNDATION DETAILS			•
A8.24	FOUNDATION DETAILS			•
A8.26	FOUNDATION DETAILS			•
A9.20	INTERIOR SLAB DETAILS			•

Grand total: 44

structural

		BP 1	BP 1 - PERMIT SET	BP 2
S0.01	DRAWING INDEX AND LIST OF ABBREVIATIONS			•
S0.02	GENERAL STRUCTURAL NOTES			•
S0.03	GENERAL STRUCTURAL NOTES CONT.			•
S0.04	SPECIAL INSPECTION AND TESTING			•
S0.05	SPECIAL INSPECTION AND TESTING CONT.			•
S0.06	SPECIAL INSPECTION AND TESTING CONT.			•
S0.22	FLOOR LIVE LOAD PLAN - LEVEL 2			•
S0.23	FLOOR LIVE LOAD PLAN - LEVEL 3			•
S0.31	SNOW DRIFT LOAD PLAN - ROOF			•
S0.41	ROOF DIAPHRAGM ATTACHMENT PLAN			•
S2.01	OVERALL FOUNDATION PLAN - LEVEL 1			•
S2.02	OVERALL FRAMING PLAN - LEVEL 2			•
S2.03	OVERALL FRAMING PLAN - LEVEL 3			•
S2.04	OVERALL FRAMING PLAN - ROOF			•
S2.11	MAT FOUNDATION PLAN - SECTOR A			•
S2.11R	MAT FOUNDATION REINFORCING PLAN - SECTOR A			•
S2.11S	SLAB ON GRADE PLAN - SECTOR A			•
S2.12	MAT FOUNDATION PLAN - SECTOR B			•
S2.12R	MAT FOUNDATION REINFORCING PLAN - SECTOR B			•
S2.12S	SLAB ON GRADE PLAN - SECTOR B			•
S2.13	MAT FOUNDATION PLAN - SECTOR C			•
S2.13R	MAT FOUNDATION REINFORCING PLAN - SECTOR C			•
S2.13S	SLAB ON GRADE PLAN - SECTOR C			•
S2.21	FRAMING PLAN LEVEL 2 - SECTOR A			•
S2.22	FRAMING PLAN LEVEL 2 - SECTOR B			•
S2.23	FRAMING PLAN LEVEL 2 - SECTOR C			•
S2.31	FRAMING PLAN LEVEL 3 - SECTOR A			•
S2.32	FRAMING PLAN LEVEL 3 - SECTOR B			•
S2.33	FRAMING PLAN LEVEL 3 - SECTOR C			•
S2.41	FRAMING PLAN ROOF - SECTOR A			•
S2.42	FRAMING PLAN ROOF - SECTOR B			•
S2.43	FRAMING PLAN ROOF - SECTOR C			•
S3.01	BRACED FRAME ELEVATIONS			•
S3.02	BRACED FRAME ELEVATIONS			•
S3.10	BRACED FRAME DETAILS			•
S3.11	BRACED FRAME DETAILS			•
S3.21	CMU WALL ELEVATIONS - SECTOR A			•
S3.22	CMU WALL ELEVATIONS - SECTOR A			•
S3.23	CMU WALL ELEVATIONS - SECTOR A			•
S3.24	CMU WALL ELEVATIONS - SECTOR C			•
S3.25	CMU WALL ELEVATIONS - SECTOR C			•
S3.26	CMU WALL ELEVATIONS - SECTOR C			•
S5.01	CONCRETE DETAILS			•
S5.02	CONCRETE DETAILS			•
S6.01	STEEL DETAILS			•
S6.02	STEEL DETAILS			•
S6.03	STEEL DETAILS			•
S6.04	STEEL DETAILS			•
S6.05	STEEL DETAILS			•
S6.10	STEEL DETAILS			•
S7.01	CMU DETAILS			•
S.702	CMU DETAILS			•

Grand total: 52

plumbing

		BP 1	BP 1 - PERMIT SET	BP 2
P0.01U	SYMBOLS LISTS AND GENERAL NOTES - PLUMBING			•
P0.02U	SCHEDULES - PLUMBING			•
P0.03U	CALCULATIONS - PLUMBING			•
P1.01U	FLOOR PLAN LEVEL 1 - BELOW MAT SLAB - SECTOR A1 - PLUMBING			•
P1.02U	FLOOR PLAN LEVEL 1 - BELOW MAT SLAB - SECTOR B - PLUMBING			•
P1.03U	FLOOR PLAN LEVEL 1 - BELOW SLAB - SECTOR C - PLUMBING			•
P1.01	FLOOR PLAN LEVEL 1 BELOW SLAB - SECTOR A1 - PLUMBING			•
P1.02	FLOOR PLAN LEVEL 1 BELOW SLAB - SECTOR B - PLUMBING			•
P1.03	FLOOR PLAN LEVEL 1 BELOW SLAB - SECTOR C - PLUMBING			•
P1.21	FLOOR PLAN LEVEL 2 - BELOW SLAB - SECTOR A2 - PLUMBING			•
P1.23	FLOOR PLAN LEVEL 2 - BELOW SLAB - SECTOR C - PLUMBING			•
P4.01U	ENGLARGED FLOOR PLAN - BELOW SLAB - SECTOR B - PLUMBING			•
P4.02U	ENLARGED FLOOR PLANS - BELOW SLAB - SECTORS A AND B - PLUMBING			•
P4.03U	ENLARGED FLOOR PLANS - BELOW SLAB - SECTOR C - PLUMBING			•
P5.01U	DETAILS - PLUMBING			•

Grand total: 15

electrical

		BP 1	BP 1 - PERMIT SET	BP 2
E0.01U	SYMBOLS LISTS AND GENERAL NOTES - ELECTRICAL	•	•	•
E3.11U	UNDERGROUND FLOOR PLAN LEVEL 1 - SECTOR A1 - POWER			•
E3.12U	UNDERGROUND FLOOR PLAN LEVEL 1 - SECTOR B - POWER			•
E3.13U	UNDERGROUND FLOOR PLAN LEVEL 1 - SECTOR C - POWER			•
E3.21U	UNDERGROUND FLOOR PLAN - SECTOR A2 - POWER			•
E5.01	SINGLE LINE DIAGRAMS - ELECTRICAL	•	•	•
E5.02	SINGLE LINE DIAGRAMS - ELECTRICAL	•	•	•
E5.03	SINGLE LINE DIAGRAMS - ELECTRICAL	•	•	•
E7.01	DETAILS - ELECTRICAL			•

Grand total: 9

technology

		BP 1	BP 1 - PERMIT SET	BP 2
T0.01U	UNDERGROUND SYMBOLS LISTS AND GENERAL NOTES - TECHNOLOGY			•
T2.11U	UNDERGROUND FLOOR PLAN - SECTOR A1 - TECHNOLOGY			•
T2.12U	UNDERGROUND FLOOR PLAN - SECTOR B - TECHNOLOGY			•
T2.13U	UNDERGROUND FLOOR PLAN - SECTOR C - TECHNOLOGY			•
T3.01U	UNDERGROUND ENLARGED PLANS - TECHNOLOGY			•

Grand total: 5

av

		BP 1	BP 1 - PERMIT SET	BP 2
AV0.1	LEGENDS			•
AV0.2	CABLES AND CONNECTIONS			•
AV1.0	CONDUIT RISER			•
AV1.1	CAFE/STAGE AV SYSTEMS FLOOR PLANS			•
AV1.2	MS/HS GYM AV SYSTEMS FLOOR PLANS			•
AV2.1	CAFE/STAGE AV SYSTEMS CEILING PLAN			•
AV2.2	MS/HS GYM AV SYSTEMS CEILING PLAN			•
AV3.1	CAFE/STAGE AV SYSTEMS SECTIONS & ELEVATIONS			•
AV3.2	MS/HS GYM AV SYSTEMS SECTIONS & ELEVATIONS			•

Grand total: 9

owner
Seaside School District
1801 S Franklin St.
Seaside, OR 97138
t: 503-738-5591

architect
BRIC Architecture Inc.
1233 NW Northrup Street, Suite 100
Portland, Oregon 97209
t: (503) 595 4900

project manager
Day CPM
12745 SW Beaverdam Road #120
Beaverton, Oregon 97005
t: (503) 641-4100

civil engineer
KPFF Consulting Engineers
111 SW 5th Avenue, Suite 2500
Portland, Oregon 97204
t: (503) 542- 3960

landscape architect
Cameron McCarthy
160 E Broadway
Eugene, OR 97401
t: (541) 485-7385

structural engineer
KPFF Consulting Engineers
111 SW 5th Avenue, Suite 2500
Portland, Oregon 97204
t: (503) 227-3251

food service
Halliday Associates
656 NW Norwood Street
Camas, Washington 98607
t: (360) 834-6657

mechanical engineer
Interface Engineering
100 SW Main Street, Suite 1600
Portland, Oregon 97204
t: (503) 382-2266

electrical engineer
Interface Engineering
100 SW Main Street, Suite 1600
Portland, Oregon 97204
t: (503) 382-2266

technology
Interface Engineering
100 SW Main Street, Suite 1600
Portland, Oregon 97204
t: (503) 382 2615

acoustics
BRC Acoustics
1932 1st Avenue, Suite 620
Seattle, Washington 98101
t: (206) 270 8910

BR|IC
ARCHITECTURE, INC.

ARCHITECTURAL ABBREVIATIONS

∠	ANGLE	(E)	EXISTING	INSUL	INSULATION	PL	PROPERTY LINE
&	AND	EA	EACH	INT	INTERIOR	PLAS	PLASTER
AB	ANCHOR BOLT	EF	EXHAUST FAN			PLYWD	PLYWOOD
ACT	ACOUSTICAL CEILING TILE	EJ	EXPANSION JOINT	JAN	JANITOR	PSF	PER SQUARE FOOT
ADD	ADDENDUM	EL	ELEVATION	JT	JOINT	PT	PRESSURE TREATED
ADJ	ADJACENT	ELEC	ELECTRICAL	JST	JOIST	PVMT	PAVEMENT
AESS	ARCHITECTURAL EXPOSED STRUCTURAL STEEL	EOS	EDGE OF SLAB				
		ENGR	ENGINEER	L	LENGTH	R	RADIUS
AFF	ABOVE FINISH FLOOR	EQ	EQUAL	LAV	LAVATORY	RD	ROOF DRAIN
ALS	AREA LIGHT STANDARD	EQUIP	EQUIPMENT	LB	LAG BOLT	REF	REFERENCE
ALUM	ALUMINUM	ES	EACH SIDE	LKR	LOCKER	REFR	REFRIGERATOR
ANOD	ANODIZED	EW	EACH WAY	LS	LANDSCAPING	REQ'D	REQUIRED
		EXP	EXPANSION	LVR	LOUVER	REV	REVISE OR REVISION
BD	BOARD	EXT	EXTERIOR			RM	ROOM
BLDG	BUILDING			MATL	MATERIAL	RO	ROUGH OPENING
BLKG	BLOCKING	FA	FIRE ALARM	MB	MARKERBOARD	RCP	REFLECTED CEILING PLAN
BM	BENCH MARK	FD	FLOOR DRAIN	MAX	MAXIMUM		
BOT	BOTTOM	FDN	FOUNDATION	MECH	MECHANICAL	SAHTS	SELF ADHERED HIGH TEMPERATURE SHEET
BTWN	BETWEEN	FE	FIRE EXTINGUISHER	MED	MEDIUM		
		FEC	FIRE EXTINGUISHER CABINET	MEZZ	MEZZANINE	SAM	SELF-ADHERED MEMBRANE
C	CHANNEL	FECB	FIRE EXTINGUISHER CABINET W/ BLANKET	MFR	MANUFACTURER	SC	SOLID CORE
CB	CATCH BASIN			MIN	MINIMUM	SECT	SECTION
CCTV	CLOSED CIRCUIT TV	FF	FINISH FLOOR	MIR	MIRROR	SF	SQUARE FOOT
CG	CORNER GUARD	FIN	FINISH	MISC	MISCELLANEOUS	SHTG	SHEATHING
CIP	CAST IN PLACE CONCRETE	FL	FLOOR	MTD	MOUNTED	SHWR	SHOWER
CLG	CEILING	FO	FACE OF	MS	MIDDLE SCHOOL	SHT	SHEET
CLR	CLEAR	FOC	FACE OF CONCRETE	MTL	METAL	SIM	SIMILAR
CJ	CONTROL JOINT	FOF	FACE OF FINISH			SJ	SEISMIC JOINT
CMU	CONCRETE MASONRY UNIT	FOM	FACE OF MASONRY	(N)	NEW	SM	SHEET METAL
CONT	CONTINUOUS	FOS	FACE OF STUD	NA	NOT APPLICABLE	SQ	SQUARE
CORR	CORRIDOR	FRT	FIRE RETARDANT TREATED	NIC	NOT IN CONTRACT	SS	STAINLESS STEEL
CR	CLASSROOM	FTG	FOOTING	NOM	NOMINAL	STD	STANDARD
CSJ	CONSTRUCTION JOINT	FURR	FURRING	NS	NELSON STUD	STF	STOREFRONT
CSMT	CASEMENT			NTS	NOT TO SCALE	STL	STEEL
CT	CERAMIC TILE	GA	GAUGE/GAGE			STOR	STORAGE
℄	CENTER	GALV	GALVANIZED	OA	OVERALL	STRUCT	STRUCTUAL
CTR	CENTERLINE	GB	GRAB BAR	OC	ON CENTER	SUSP	SUSPENDED
CW	CURTAIN WALL	GC	GENERAL CONTRACTOR	OD	OVERFLOW DRAIN		
		GL	GLASS	OD	OUTSIDE DIAMETER	T/M	TO MATCH
DBL	DOUBLE	GND	GROUND	OFCI	OWNER FURNISHED CONTRACTOR INSTALLED	T	TEMPERED GLAZING
DTL	DETAIL	GVP	GYPSUM VENEER PLASTER			TC	TOP OF CURB
DF	DRINKING FOUNTAIN	GWB	GYPSUM WALL BOARD	OFOI	OWNER FURNISED OWNER INSTALLED	TEL	TELEPHONE
DIA	DIAMETER					T&G	TONGUE AND GROOVE
DIAG	DIAGONAL	HB	HOSE BIBB	OH	OVERHEAD	THK	THICK
DIM	DIMENSION	HC	HANDICAP	OPNG	OPENING	TO	TOP OF
DISP	DISPENSER	HM	HOLLOW METAL	OPP	OPPOSITE	TOD	TOP OF DECK
DN	DOWN	HPC	HIGH PERFORMANCE COATING	OS	OUTSIDE	TOS	TOP OF STRUCTURE
DP	DAMPROOFING	HVAC	HEATING, VENTILATION AND AIR CONDITIONING			TJ	TOOL JOINT
DR	DOOR					TP	TOILET PAPER
DS	DOWNSPOUT	HS	HIGH SCHOOL			TS	TUBE STEEL
DWG	DRAWING	HW	HOT WATER			TYP	TYPICAL

UNFIN	UNFINISHED		
UNO	UNLESS NOTED OTHERWISE		
VB	VAPOR BARRIER		
VERT	VERTICAL		
VEST	VESTIBULE		
VFY	VERIFY		
W/	WITH		
W/O	WITHOUT		
WC	WATER CLOSET		
WD	WOOD		
WF	WIDE FLANGE		
WH	WATER HEATER		
WP	WATERPROOFING		
WRB	WATER-RESISTIVE BARRIER		
WT	WEIGHT		

SYMBOLS

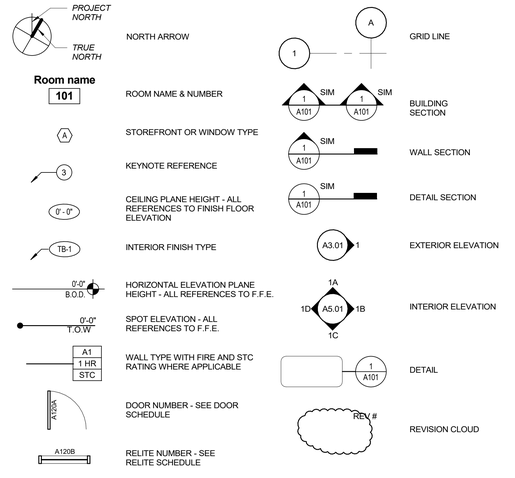

VICINITY MAP

2000 Spruce Drive, Seaside, Oregon 97138

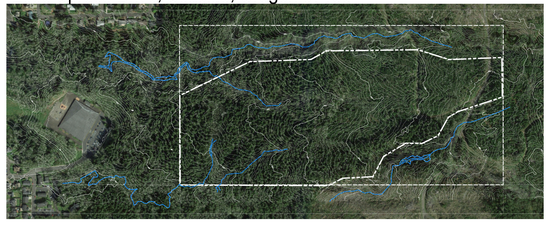

BP2 PERMIT SET

VOLUME 1 OF 1

New Middle School / High School
BP2 PERMIT SET
6/15/2018
Project #17007

C:\BRIC Projects\17007 SSD-MSHS_christie.steme.rvt

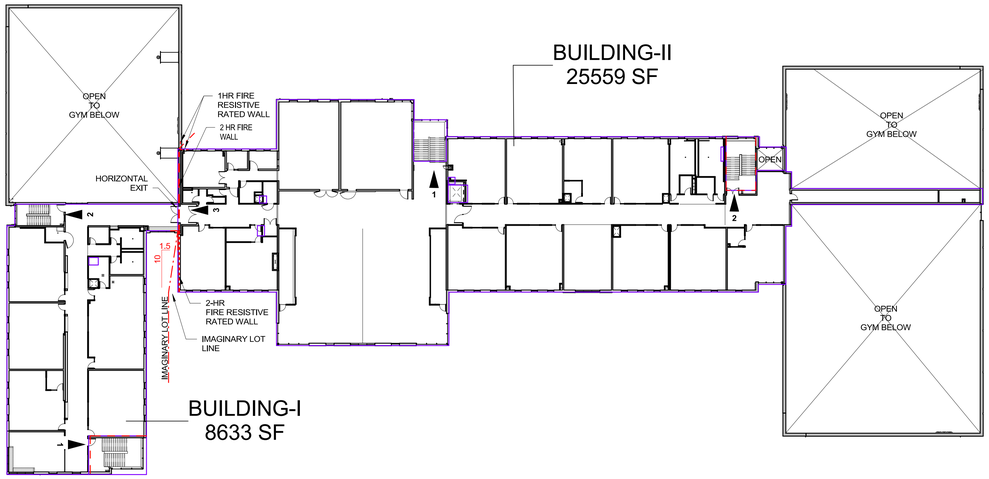

THIRD FLOOR ANALYSIS PLAN (3)

SCALE: 1" = 30'-0"

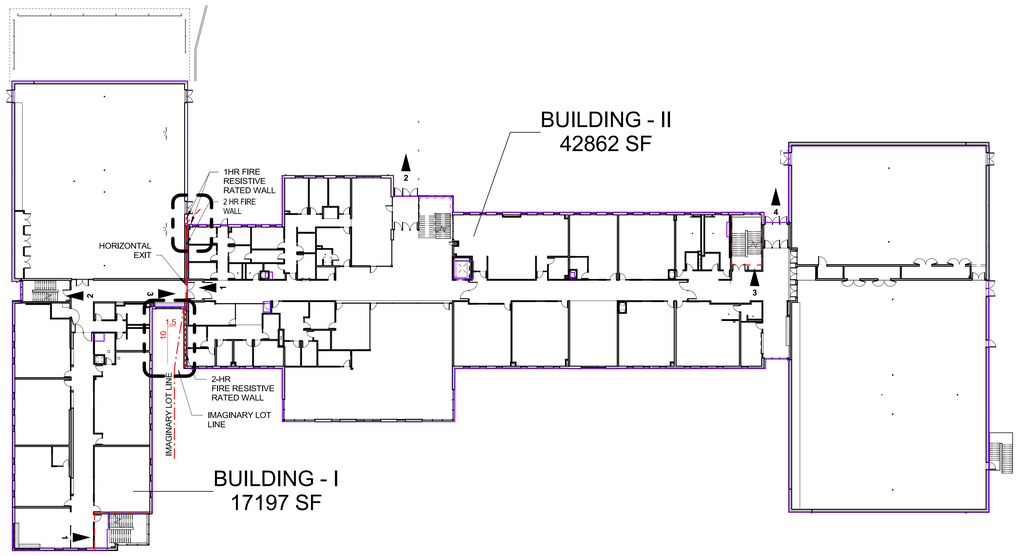

SECOND FLOOR AREA ANALYSIS PLAN (2)

SCALE: 1" = 30'-0"

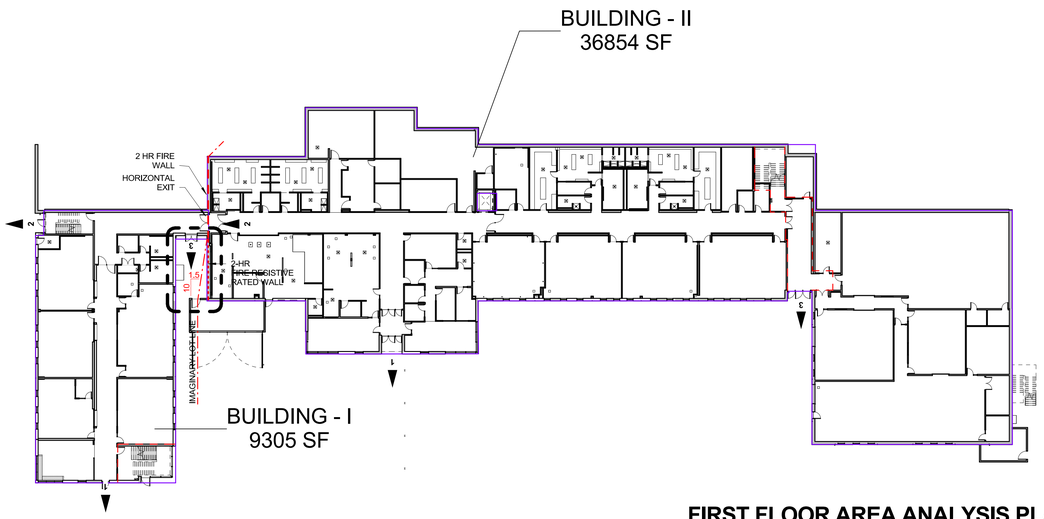

FIRST FLOOR AREA ANALYSIS PLAN (1)

SCALE: 1" = 30'-0"

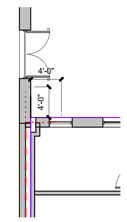

Fire Wall Detail (5)

SCALE: 1/8" = 1'-0"

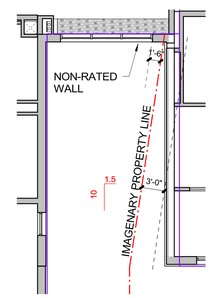

Fire Wall Detail (6)

SCALE: 1/8" = 1'-0"

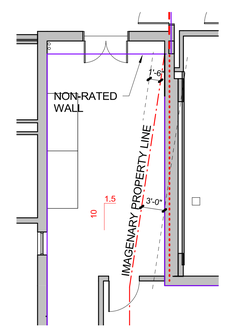

Fire Wall Detail (4)

SCALE: 1/8" = 1'-0"

LEGEND:

	2-HR FIRE WALL ASSEMBLY - 90 MINUTE RATED OPENINGS
	1-HR FIRE BARRIER ASSEMBLY - 60 MINUTE RATED OPENINGS
	2-HR FIRE RESISTIVE RATING
	IMAGINARY LOT LINE
	INCIDENTAL USE AREA PER 508.2 - PARTITIONS SHALL EXTEND TO FLOOR CEILING OR ROOF ASSEMBLY TO PREVENT THE PASSAGE OF SMOKE AND ALL DOORS SHALL BE SELF-CLOSING. AUTOMATED SPRINKLERS SYSTEM IS PROVIDE PER 508.2 IN LIEU OF ONE HOUR PROTECTIONS.
	FIRE -RETARDANT TREATED ROOF DECK FOR A DISTANCE OF 4'-0" ON EACH SIDE OF FIRE WALL WITH NO OPENINGS IN ROOF DECK (OSSC 2007 SECTION 705.5, EXCEPTION 4.4.3)
◄ ×	BUILDING EXIT

ALLOWABLE AREA ANALYSIS:

BUILDING I - MS CLASSROOM WING + MS GYMNASIUM

SUMMARY:
BUILDING IS MULTI-STORY COMBUSTIBLE CONSTRUCTION, IT HAS AN AUTOMATIC SPRINKLER SYSTEM THROUGHOUT PER OSSC SECTION 903.3.1.1.

USE & OCCUPANCY:
EDUCATIONAL GROUP E
CONSISTING OF CLASSROOMS AND GYMNASIUM

CONSTRUCTION TYPE:
TYPE II-B PER OSSC TABLE 503

ALLOWABLE NUMBER OF STORIES:
2 STORIES (PER TABLE 503) + 1 STORY (SPRINKLER SYSTEM - PER OSSC 504.2) = 3 STORIES

ALLOWABLE AREA:
14,500 SF PER OSSC TABLE 503

AREA MODIFICATION: (PER OSSC SECTION 506)

LEVEL 1 CALCULATION

$$I_f = \left[\frac{F}{P} - 0.25\right]\frac{W}{30} = 100\left[\frac{290}{435} - 0.25\right]\frac{30}{30} = .42$$

F = 290 FT
P = 435 FT
W = 30

I_s = 200 PERCENT (PER 506.3)

$$A_a = A_t + \left[\frac{A_t}{100} I_f\right] + \left[\frac{A_t}{100} I_s\right] = 14{,}500 + \left[\frac{(14{,}500)(.42)}{100}\right] + \left[\frac{(14{,}500)(200)}{100}\right]$$

A_a = 14,500 + 6,090 + 29,000 = 49,590 SF

LEVEL 2 + 3 CALCULATION

$$I_f = \left[\frac{F}{P} - 0.25\right]\frac{W}{30} = 100\left[\frac{550}{635} - 0.25\right]\frac{30}{30} = .62$$

F = 550
P = 635
W = 30

I_s = 200 PERCENT (PER 506.3)

$$A_a = A_t + \left[\frac{A_t}{100} I_f\right] + \left[\frac{A_t}{100} I_s\right] = 14{,}500 + \left[\frac{(14{,}500)(.62)}{100}\right] + \left[\frac{(14{,}500)(200)}{100}\right]$$

A_a = 14,500 + 8,990 + 29,000 = 52,490 SF

TOTAL ALLOWABLE AREA PER FLOOR:
LEVEL 1 = 49,590 SF
LEVEL 2 + 3 = 53,345 SF

TOTAL ACTUAL AREA:
FIRST FLOOR: 9,305 SF < 49,590 SF = OK
SECOND FLOOR: 17,197 SF < 52,490 SF = OK
THIRD FLOOR: 8,633 SF < 52,490 SF = OK

(ACTUAL IS LESS THAN ALLOWABLE, THEREFORE, BUILDING 'I' AREA IS OK)

BUILDING II - HS GYMNASIUMS, LOCKER ROOMS, HS CLASSROOMS, LIBRARY, ADMIN., AND EATING

SUMMARY:
BUILDING IS MULTI- STORY COMBUSTIBLE CONSTRUCTION, IT HAS AN AUTOMATIC SPRINKLER SYSTEM THROUGHOUT PER OSSC SECTION 903.2.2

USE & OCCUPANCY:
EDUCATIONAL GROUP E
CONSISTING OF GYMNASIUMS, LOCKER ROOMS, CLASSROOMS, LIBRARY, ADMIN., AND EATING

CONSTRUCTION TYPE:
TYPE II-B PER OSSC TABLE 503

ALLOWABLE NUMBER OF STORIES:
2 STORIES (PER OSSC TABLE 503) + 1 STORY (SPRINKLER SYSTEM - PER
504.2) = 3 STORIES

ALLOWABLE AREA:
14,500 SF PER OSSC TABLE 503

AREA MODIFICATION: (PER OSSC SECTION 506)

LEVEL 1 CALCULATION

$$I_f = \left[\frac{F}{P} - 0.25\right]\frac{W}{30} = 100\left[\frac{620}{1{,}175} - 0.25\right]\frac{33}{30} = .28$$

F = 620
P = 1,175
W = 30

I_s = 300 PERCENT (PER 506.3)

$$A_a = A_t + \left[\frac{A_t}{100} I_f\right] + \left[\frac{A_t}{100} I_s\right] = 14500 + \left[\frac{(14{,}500)(.28)}{100}\right] + \left[\frac{(14{,}500)(300)}{100}\right]$$

A_a = 14,500 + 4,060 + 29,000 = 47,560 SF

LEVEL 2 + 3 CALCULATION

$$I_f = \left[\frac{F}{P} - 0.25\right]\frac{W}{30} = 100\left[\frac{1{,}127}{1{,}293} - 0.25\right]\frac{31}{30} = .68$$

F = 1180
P = 1270
W = 30

I_s = 200 PERCENT (PER 506.3)

$$A_a = A_t + \left[\frac{A_t}{100} I_f\right] + \left[\frac{A_t}{100} I_s\right] = 14500 + \left[\frac{(14{,}500)(.68)}{100}\right] + \left[\frac{(14{,}500)(200)}{100}\right]$$

A_a = 14,500 + 9,845 + 29,000 = 53,345 SF

TOTAL ALLOWABLE AREA PER FLOOR:
LEVEL 1 = 47,560 SF
LEVEL 2 + 3 = 53,345 SF

TOTAL ACTUAL AREA:
FIRST FLOOR: 36,854 SF < 47,560 SF = OK
SECOND FLOOR: 42,862 SF < 53,345 SF = OK
THIRD FLOOR: 25,559 SF < 53,345 SF = OK

(ACTUAL IS LESS THAN ALLOWABLE, THEREFORE, BUILDING 'II' AREA IS OK)

BRIC ARCHITECTURE, INC.
1233 NW NORTHRUP STREET, SUITE 100
PORTLAND, OR 97209 T 503.595.4900

New Middle School / High School
Seaside School District
1801 S. FRANKLIN STREET, SEASIDE, OR 97138
t: 503-738-5591

REGISTERED ARCHITECT 3473 DANIEL J. HESS PORTLAND, OREGON STATE OF OREGON

Digitally signed by Daniel J. Hess
DN: C=US, O=BRIC Architecture, Inc., CN=Daniel J. Hess, E=dan@bricarch.com
Date: 2018.06.15 16:17:00 -08'00'

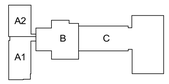

key plan

phase	BP2 PERMIT SET
date	6/15/2018
revisions	
project #	17007

CODE ANALYSIS - EXITING & ALLOWABLE AREA

A0.03

6/15/2018 4:26:37 PM
C:\BRIC Projects\17007 SSD-MSHS_christie.sterne.rvt

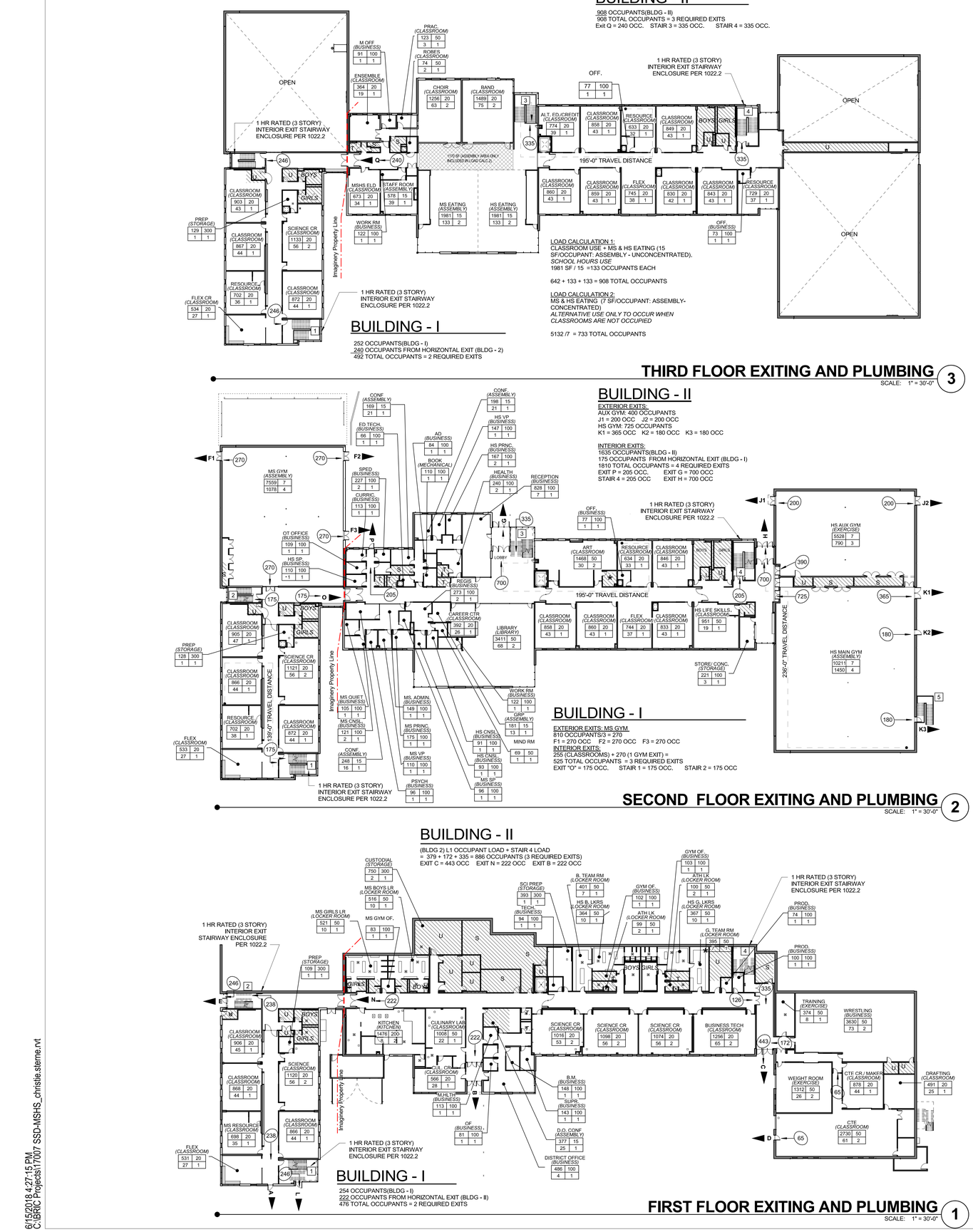

LEGEND:

PLUMBING FIXTURE COUNT

DAYTIME USE

ASSEMBLY AREAS ARE OCCUPIED, DURING SCHOOL HOURS, BY STUDENTS AND STAFF WHO ARE ALREADY TAKEN INTO ACCOUNT WITH THE GROUP E TOTALS, ADDITIONAL FIXTURES FOR THESE ASSEMBLY SPACES FOR DAYTIME USE IS CONSIDERED REDUNDANT. SEE THE CALCULATIONS BELOW FOR AFTER-HOURS USE.

TOTAL OCCUPANTS OF GROUP E:
AREA [CLASSROOM ONLY] = 39,383 PER TABLE 29A (GROUP E, 20SF PER OCCUPANT), 39,383 SF/20SF = 1,969 OCCUPANTS

AREA [NON-CLASSROOM ONLY] = 8,084 PER TABLE 29A (GROUP E, 50SF PER OCCUPANT), 8,084 SF/50SF = 162 OCCUPANTS

1,969 + 162 = 2,131/2 = 1,065 FOR EACH GENDER

TOTAL OCCUPANTS FOR SPACES UNDER GROUP B CLASSIFICATION:
AREA [OFFICE ONLY] = 8,966 (OCCUPANT LOAD, 100SF PER OCCUPANT), 8,966 SF/100SF = 90 OCCUPANTS

AREA [KITCHEN ONLY] = 1,684 (OCCUPANT LOAD, 200SF PER OCCUPANT), 1,684 SF/200SF = 8 OCCUPANTS

90 + 8 = 98/2 = 49 FOR EACH GENDER

GROUP E	WATER CLOSETS		LAVATORIES		DF'S
	MALE	FEMALE	MALE	FEMALE	
FIXTURES REQUIRED (STUDENT USE)	1065@1:50	1065@1:50	1065@1:50	1065@1:50	1 PER FLOOR
	21	21	21	21	---
GROUP B					
	49@1:25	49@1:25	49@1:40	49@1:40	
	2	2	1	1	
TOTAL REQUIRED	**23**	**23**	**22**	**22**	
PROVIDED			20	20	---
WATER CLOSETS	12	27			
URINALS	14	N/A			
UNISEX	2	2	2	2	
TOTAL PROVIDED	**26**	**29**	**22**	**22**	
			DRINKING FOUNTAINS		5

AFTER-HOURS USE

FIXTURE CALCULATIONS FOR AREAS USED OUTSIDE OF REGULAR SCHOOL HOURS ARE TO INCLUDE THE GYMNASIUMS, EATING SPACES & LIBRARY WHEN CLASSROOMS & OFFICES ARE NOT USED OR OCCUPIED. (EXAMPLE: PTA EVENTS, ALL ASSEMBLY SPACES ARE IN USE AND ALL RESTROOMS ARE ACCESSIBLE)

TOTAL OCCUPANTS FOR SPACES USED AFTER HOURS:

AREA 1 [GYMNASIUMS] = 23,339 (OCCUPANT LOAD, 7 PER OCCUPANT), 23,339 SF/7 = 3,334 OCCUPANTS

AREA 2 [LIBRARY] = 3,390 (OCCUPANT LOAD, 50SF PER OCCUPANT), 3,400 SF/50 = 68 OCCUPANTS

3334+68 = 3400/2 =1700 FOR EACH GENDER
MALE: 1697/1/25 = 14 WC REQ'D
FEMALE: 1697/65 = 27 WC REQ'D

AREA 3 [EATING - UNCONCENTRATED] = 4,092 (OCCUPANT LOAD, 15SF PER OCCUPANT),
4,020 SF/15 = 268 OCCUPANTS /2 = 134 PER GENDER
MALE: 134/75 = 2 REQ'D
FEMALE: 134/75 = 2 REQ'D

GROUP A	WATER CLOSETS		LAVATORIES		DF'S
	MALE	FEMALE	MALE	FEMALE	
			1830@1:200	1830@1:200	
FIXTURES REQUIRED	**16**	**29**	**10**	**10**	1 PER FLOOR
PROVIDED			20	20	
WATER CLOSETS	12	27			
URINALS	14	N/A			
UNISEX	2	2	2	2	
TOTAL PROVIDED	**29**	**29***	**22**	**22**	
			DRINKING FOUNTAINS		5

GENERAL NOTES:

UNISEX RESTROOMS SPLIT EQUALLY M/F TO MEET THE WATER CLOSET REQUIREMENTS.

ALL FIXTURE COUNTS EXCLUDE UNISEX TOILETS WITHIN LOCKED SPACES (I.E. LIFE SKILLS, NURSE'S OFFICE, DISTRICT OFFICE)

LEGEND:

	2-HR FIRE WALL ASSEMBLY - 90 MINUTE RATED OPENINGS
	1-HR FIRE BARRIER ASSEMBLY - 60 MINUTE RATED OPENINGS
	2-HR FIRE RESISTIVE RATING
	IMAGINARY LOT LINE
ROOM NAME (Code Definition) 980 20 / 49 1	AREA (SF) - OCC. LOAD FACTOR - TABLE 1004.1.2 - OCCUPANTS - # OF EXITS REQUIRED * (CUMULATIVE EXITS)
#	NUMBER OF OCCUPANTS WITH DIRECTION OF TRAVEL
*	ACCESSORY USE TO PRIMARY ADJACENT ROOM - OCCUPANTS NOT COUNTED FOR EXITING
U	UTILITY AND/OR CUSTODIAL ROOM - ACCESSORY USE TO PRIMARY ADJACENT ROOM - OCC. NOT COUNTED FOR EXITING
S	STORAGE ROOM - ACCESSORY USE TO PRIMARY ADJACENT ROOM - OCCUPANTS NOT COUNTED FOR EXITING
T	TOILET ROOM - ACCESSORY USE TO PRIMARY ADJACENT ROOM - OCCUPANTS NOT COUNTED FOR EXITING
XX'	PATH OF EGRESS TO AN EXIT - [TRAVEL DISTANCE NOTED IN (XX') EQUALS TOTAL DISTANCE FOR ROUTE] - MAXIMUM DISTANCE OF 250' ALLOWED PER TABLE 1015.1
	EXIT SIGN LOCATIONS (ARROWS INDICATE DIRECTIONAL EXIT SIGN)
x	EXIT AND EXIT TYPE AS DESCRIBED BELOW
SH - 1HR	FIRE RATED SHAFT - 1 HR (PER 713.4 LESS THAN 4-STORIES)
SH - 2HR	FIRE RATED SHAFT - 2 HR (PER 713.4 MORE THAN 4-STORIES)

EXIT WIDTH TABLE

EXIT	OCCUPANT LOAD	REQUIRED WIDTH (INCHES)*	PROVIDED WIDTH (INCHES)	NOTES
A	238	36	36	LARGEST LOAD LEVEL 2 = **STAIR 1**
B	222	34	108	
C	443	67	120	LARGEST LOAD (LEVEL1 / **STAIR 4)**
D	65	10	32	1/2 CTE CR, 1/2 CTE, OF, 1/2 DRAFTING
E	249	38	38	
F1	270	41	60	1/4 MS GYMNASIUM
F2	270	41	60	1/4 MS GYMNASIUM
F3	270	41	60	1/4 MS GYMNASIUM
G	700	105	120	MAIN EXIT
H	700	105	120	MAIN EXIT
J1	200	30	60	1/4 AUX HS GYM
J2	200	30	60	1/4 AUX HS GYM
K1	365	55	60	
K2	180	27	32	
K3	180	27	32	
L	246	37	40	STAIR 1 = LARGEST LOAD FROM L3
N	222	34	60	HORIZONTAL EXIT
O	175	27	60	HORIZONTAL EXIT
P	210	32	34	
Q	240	36	60	HORIZONTAL EXIT

REQUIRED EGRESS SYSTEM WIDTH WITH SPRINKLER SYSTEM (PER OSSC 1005.3.1 & 1005.3.2) REQUIRED WIDTH AT OTHER EGRESS COMPONENTS= OCC. LOAD X 0.15 = MIN. WIDTH

STAIR WIDTH TABLE

STAIR #	OCCUPANT LOAD	REQUIRED WIDTH (INCHES)*	PROVIDED WIDTH (INCHES)	NOTES
1	246	50	78	LARGEST LOAD AT LEVEL 3
2	246	50	52	LARGEST LOAD AT LEVEL 3
3	335	67	86	LARGEST LOAD AT LEVEL 3
4	335	67	78	LARGEST LOAD FROM LEVEL 3
5	180	36	56	

REQUIRED WIDTH WITH SPRINKLER SYSTEM PER OSSC SECTION 1005.3.1 (ASSUMED OCCUPANT LOAD X 0.20 = MINIMUM WIDTH - STAIR

BRIC ARCHITECTURE, INC.
1233 NW NORTHRUP STREET, SUITE 100
PORTLAND, OR 97209 T 503 595 4900

New Middle School / High School
Seaside School District
1801 S. FRANKLIN STREET, SEASIDE, OR 97138
t: 503-738-5591

REGISTERED ARCHITECT 3473 DANIEL J. HESS PORTLAND, OREGON STATE OF OREGON

Digitally signed by Daniel J. Hess
DN: C=US, O=Oregon, ou=Not Yet Determined, cn=Daniel J. Hess, A=Architect, RLC=3473
Date: 2015.05.19 16:29:15-07'00'

Daniel J. Hess

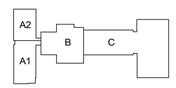

key plan

phase	BP2 PERMIT SET
date	6/15/2018
revisions	
project #	17007

CODE ANALYSIS - EXITING

A0.05

6/15/2018 4:27:15 PM
C:\BRIC Projects\17007 SSD-MSHS_christie.sterne.rvt

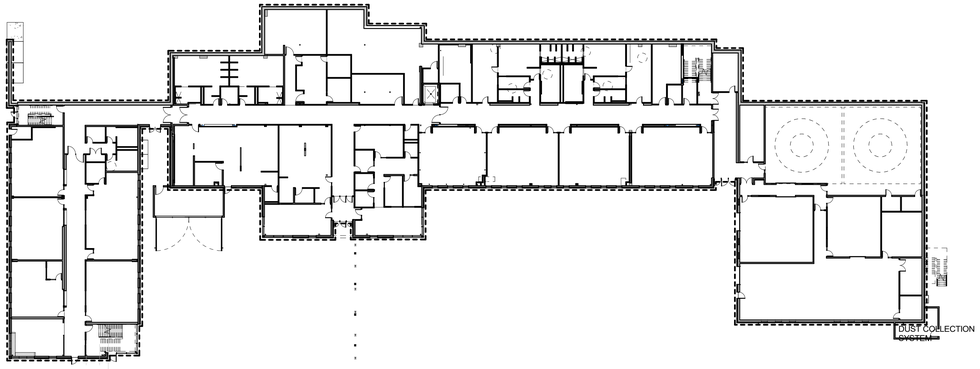

FIRST FLOOR PLAN OVERALL-AIR BARRIER 1
SCALE: 1/32" = 1'-0"

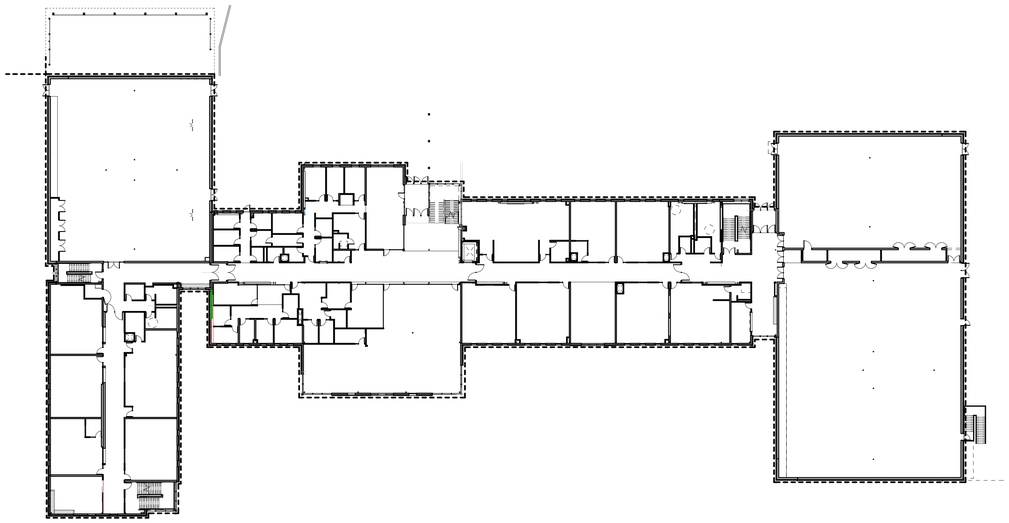

SECOND FLOOR PLAN OVERALL-AIR BARRIER 2
SCALE: 1/32" = 1'-0"

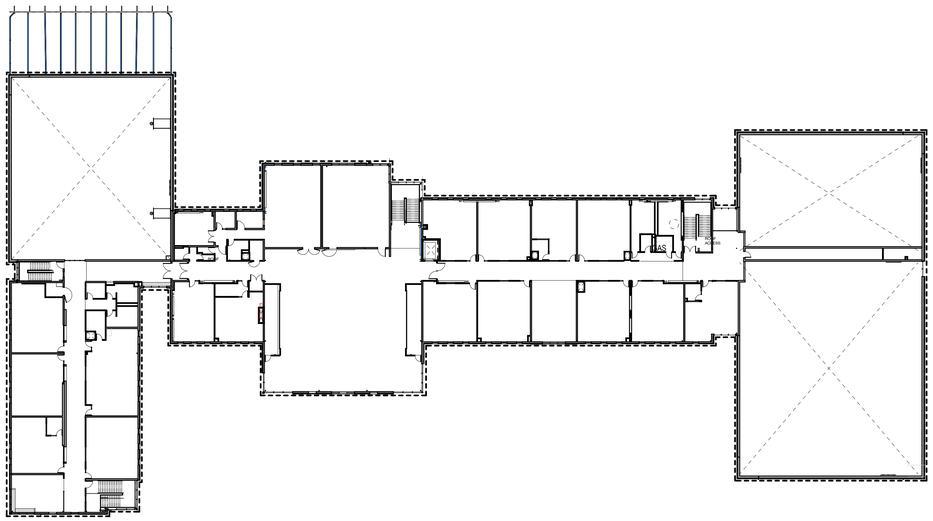

THIRD FLOOR PLAN OVERALL-AIR BARRIER 3
SCALE: 1/32" = 1'-0"

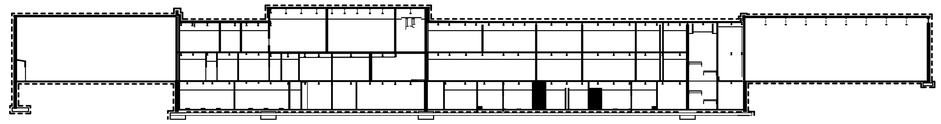

OVERALL BUILDING SECTION-AIR BARRIER 4
SCALE: 1/32" = 1'-0"

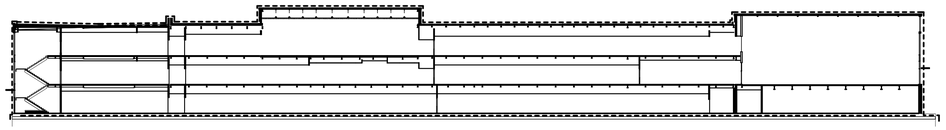

OVERALL BUILDING SECTION-AIR BARRIER 5
SCALE: NTS

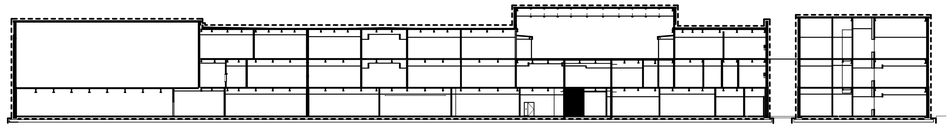

OVERALL BUILDING SECTION-AIR BARRIER 6
SCALE: 1/32" = 1'-0"

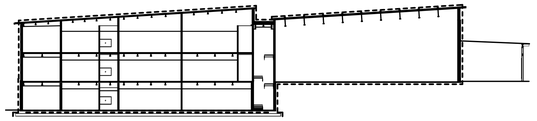

BUILDING SECTION-A-AIR BARRIER 7
SCALE: 1/32" = 1'-0"

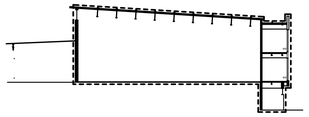

BUILDING SECTION-A-AIR BARRIER 8
SCALE: 1/32" = 1'-0"

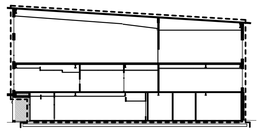

BUILDING SECTION-B-AIR BARRIER 9
SCALE: 1/32" = 1'-0"

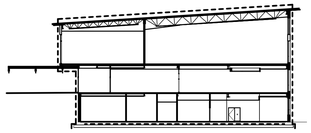

BUILDING SECTION-B-AIR BARRIER 10
SCALE: 1/32" = 1'-0"

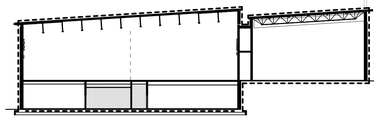

BUILDING SECTION-C-AIR BARRIER 11
SCALE: 1/32" = 1'-0"

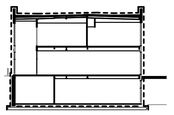

BUILDING SECTION-C-AIR BARRIER 12
SCALE: 1/32" = 1'-0"

LEGEND

AIR BARRIER AT EXTERIOR FACES

NOTE:
NO VAPOR BARRIER OCCURS BELOW MAT FOUNDATION

BR|IC
ARCHITECTURE, INC.
1233 NW NORTHRUP STREET, SUITE 100
PORTLAND, OR 97209 T 503.595.4900

New Middle School / High School
Seaside School District
1801 S. FRANKLIN STREET, SEASIDE, OR 97138
t: 503-738-5591

NOT FOR CONSTRUCTION

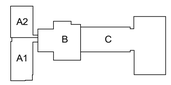

key plan

phase	BP2 PERMIT SET
date	6/15/2018
revisions	
project #	17007

AIR BARRIER DIAGRAM

A0.07

6/15/2018 5:23:23 PM
C:\BRIC Projects\17007 SSD-MSHS_christie.sterne.rvt

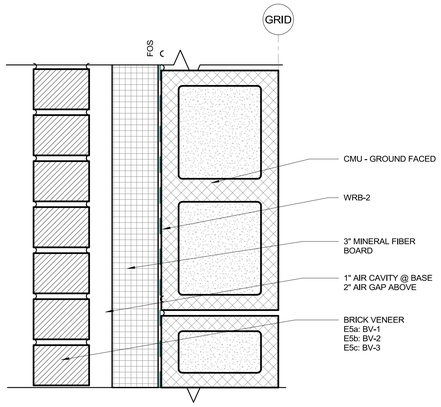

WALL TYPE E9 (6)
SCALE: 3" = 1'-0"

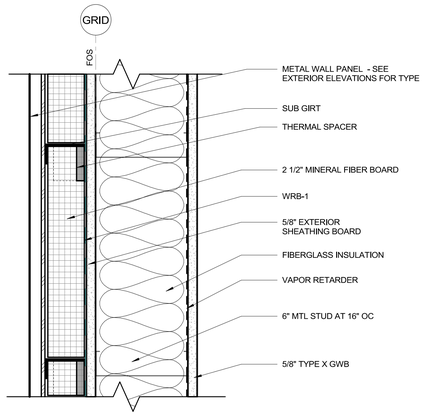

WALL TYPE E6 (10)
SCALE: 3" = 1'-0"

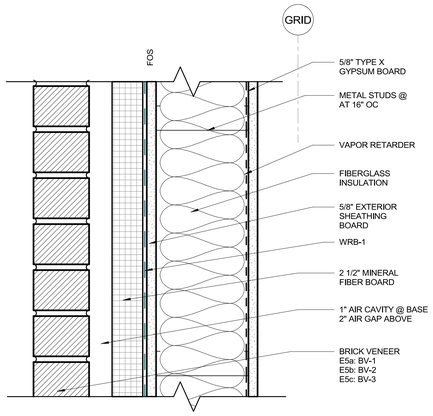

WALL TYPE E5 (7)
SCALE: 3" = 1'-0"

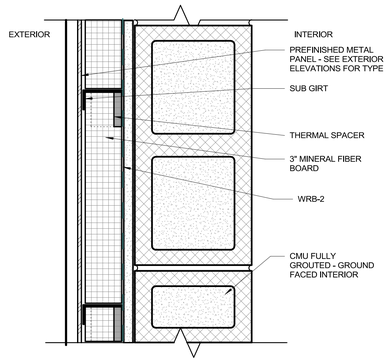

WALL TYPE E4 (5)
SCALE: 3" = 1'-0"

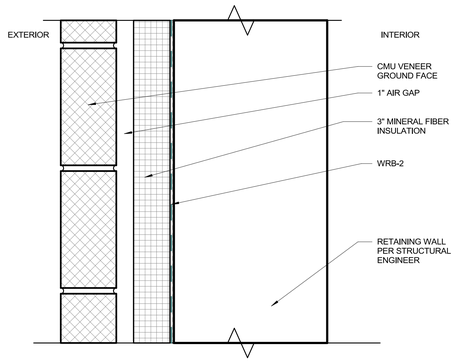

WALL TYPE 3 (4)
SCALE: 3" = 1'-0"

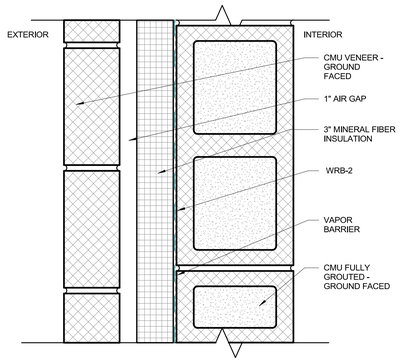

WALL TYPE E2 (3)
SCALE: 3" = 1'-0"

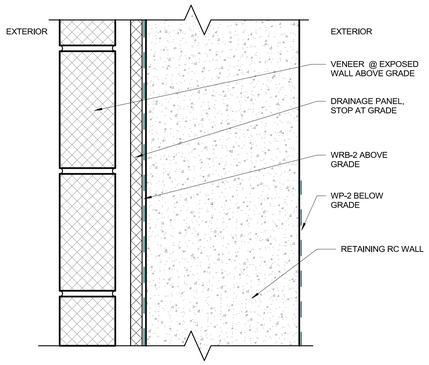

WALL TYPE E1b (2)
SCALE: 3" = 1'-0"

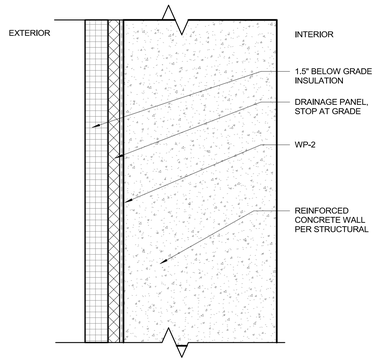

WALL TYPE E1 (1)
SCALE: 3" = 1'-0"

6/15/2018 3:31:02 PM
C:\BRIC Projects\17007 SSD-MSHS_christie.sterne.rvt

BRIC ARCHITECTURE, INC.
1233 NW NORTHRUP STREET, SUITE 100
PORTLAND, OR 97209 T 503.595.4900

New Middle School / High School
Seaside School District
1801 S. FRANKLIN STREET, SEASIDE, OR 97138
t: 503-738-5591

REGISTERED ARCHITECT
3473
DANIEL J. HESS
PORTLAND, OREGON
STATE OF OREGON

Daniel J. Hess

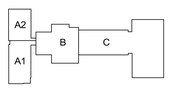

key plan

phase	BP2 PERMIT SET
date	6/15/2018
revisions	
project #	17007

EXTERIOR WALL ASSEMBLIES

A0.10

KEYNOTES

A1.01 FACE OF CONCRETE SLAB, TYP.
A1.02 EXTERIOR FACE OF RETAINING WALL, TYP.
A1.03 TURNDOWN EDGE, TYP.
A1.13 12" H. CONCRETE PLINTH; TAPER UNDER STAIR.

SLAB PLAN NOTES

1 DIMENSIONS SHOWN ARE TO FACE OF SLAB, CENTERLINE OF COLUMN OR GRID LINE UNLESS NOTED OTHERWISE.
2 BEARING WALLS PER STRUCTURAL
3 SLAB SLOPES AT WALKING SURFACES TO MEET 2009 ICC A117.1
4 SLOPES TO DRAINS TO BE MIN. 2%, AND COMPLY WITH 2009 ICC A117.1
5 VERIFY WIDTH AND DEPTH OF RECESSED FLOORS FOR ELEVATOR PITS, WALK-IN FREEZERS/COOLERS, FLOOR SINKS, AND SPECIAL FLOOR ASSEMBLIES WITH MANUFACTURER.
6 DIMENSIONS TO WALLS AND OPENINGS TO BE INDICATED ON DIMENSIONED DRAWINGS.

LEGEND

WALL, SEE STRUCTURAL DWGS.
TOP OF SLAB
FD FLOOR DRAIN, SLOPE TO DRAIN
SD SHOWER DRAIN RECESS
FS FLOOR SINK RECESS
TD TRENCH DRAIN RECESS
COLUMNS, SEE STRUCTURAL

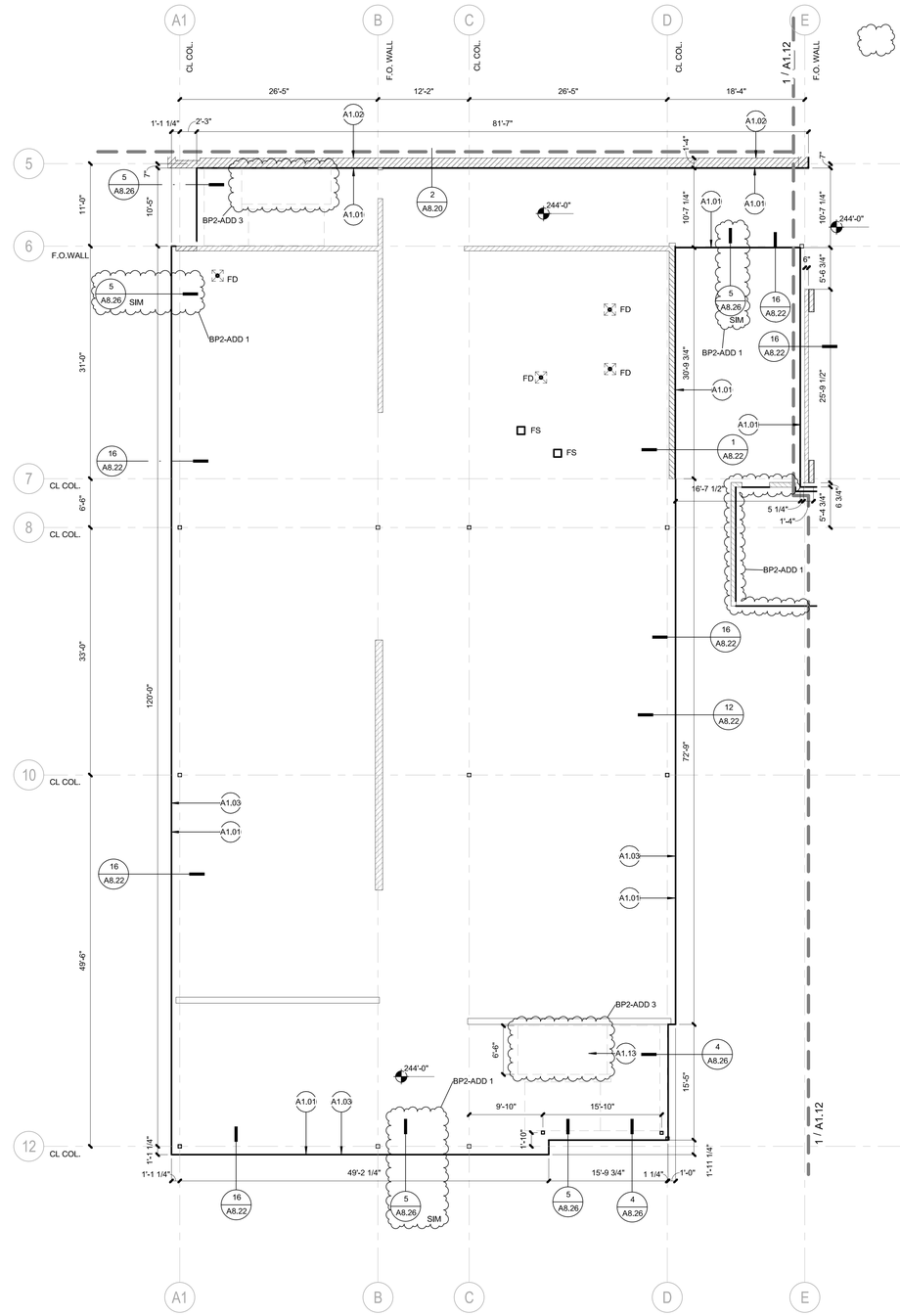

FIRST FLOOR SLAB PLAN - SECTOR A1

SCALE: 1/8" = 1'-0"

1

BRIC ARCHITECTURE, INC.
1233 NW NORTHRUP STREET, SUITE 100
PORTLAND, OR 97209 T 503 595 4900

New Middle School / High School
Seaside School District
1801 S. FRANKLIN STREET, SEASIDE, OR 97138
t: 503-738-5591

REGISTERED ARCHITECT
3473
DANIEL J. HESS
PORTLAND, OREGON
STATE OF OREGON

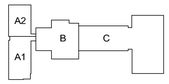

key plan

package	BP2-PERMIT SET
issue date	06/15/2018
revisions	
07/05/2018	BP2-ADD 1
07/16/2018	BP2-ADD 3

project # 17007

SLAB PLAN LEVEL 1 - SECTOR A1

A1.11

7/16/2018 1:32:36 PM
C:\BRIC Projects\17007 SSD-MSHS_christie.sterne.rvt

KEYNOTES

A1.01 FACE OF CONCRETE SLAB, TYP.
A1.02 EXTERIOR FACE OF RETAINING WALL, TYP.
A1.03 TURNDOWN EDGE, TYP.
A1.08 DEPRESS SLAB @ SHOWERS FOR MED SET & TILE; RECESS TRENCH DRAINS. PER MANUFACTURER'S SPECS. TYP.
A1.10 4" H. CONCRETE CURB
A1.14 DROPPED SLAB FOR FLOOR SINKS. CONFIRM SIZE AND DEPTH WITH MANUFACTURER.

SLAB PLAN NOTES

1 DIMENSIONS SHOWN ARE TO FACE OF SLAB, CENTERLINE OF COLUMN OR GRID LINE UNLESS NOTED OTHERWISE.
2 BEARING WALLS PER STRUCTURAL
3 SLAB SLOPES AT WALKING SURFACES TO MEET 2009 ICC A117.1
4 SLOPES TO DRAINS TO BE MIN. 2%, AND COMPLY WITH 2009 ICC A117.1
5 VERIFY WIDTH AND DEPTH OF RECESSED FLOORS FOR ELEVATOR PITS, WALK-IN FREEZERS/COOLERS, FLOOR SINKS, AND SPECIAL FLOOR ASSEMBLIES WITH MANUFACTURER.
6 DIMENSIONS TO WALLS AND OPENINGS TO BE INDICATED ON DIMENSIONED DRAWINGS.

LEGEND

WALL, SEE STRUCTURAL DWGS.
TOP OF SLAB
FD FLOOR DRAIN, SLOPE TO DRAIN
SD SHOWER DRAIN RECESS
FS FLOOR SINK RECESS
TD TRENCH DRAIN RECESS
COLUMNS, SEE STRUCTURAL

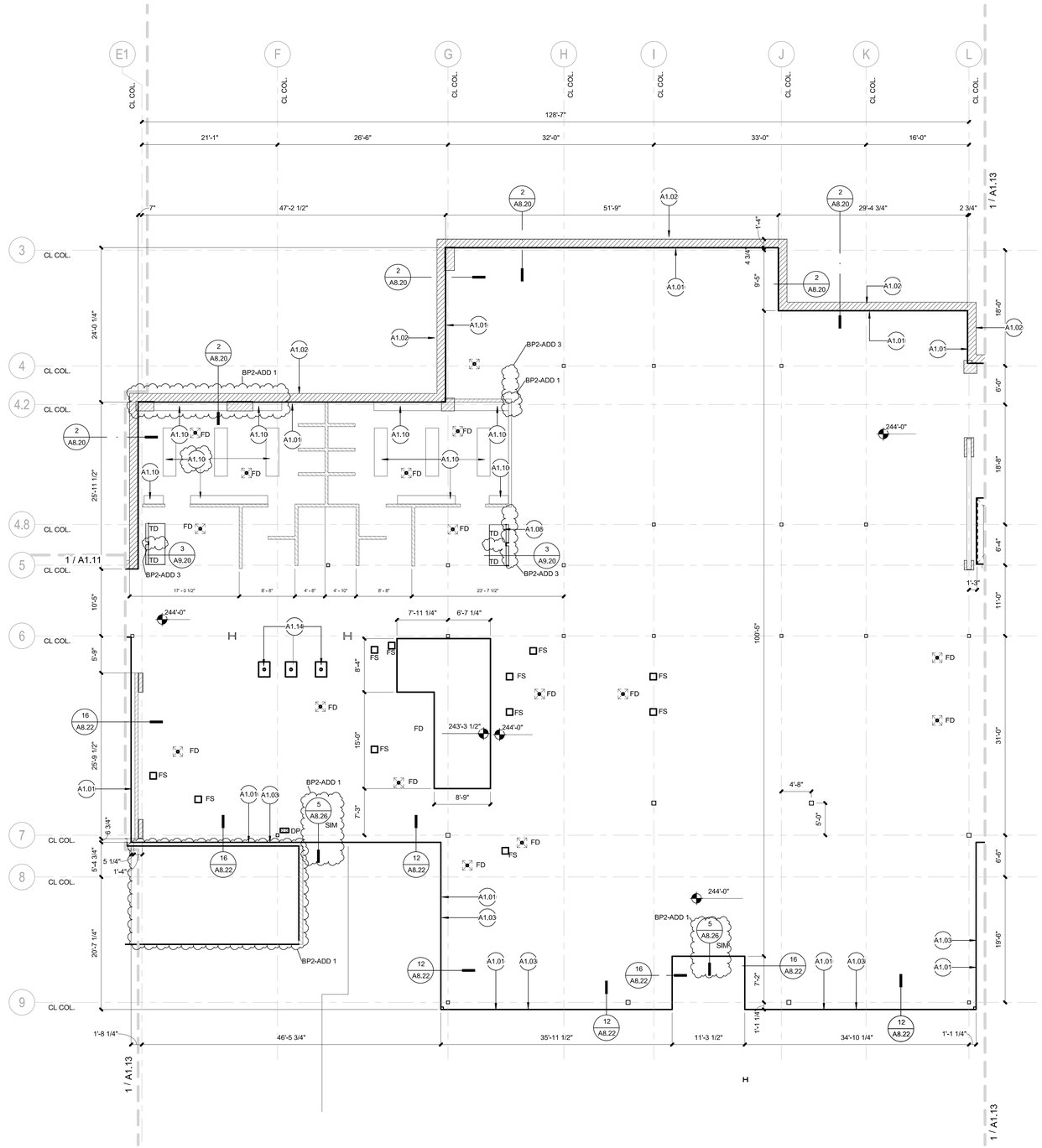

FIRST FLOOR SLAB PLAN - SECTOR B

SCALE: 1/8" = 1'-0"

1

BRIC ARCHITECTURE, INC.
1233 NW NORTHRUP STREET, SUITE 100
PORTLAND, OR 97209 T 503.595.4900

New Middle School / High School
Seaside School District
1801 S. FRANKLIN STREET, SEASIDE, OR 97138
t: 503-738-5591

REGISTERED ARCHITECT 3473 DANIEL J. HESS PORTLAND, OREGON STATE OF OREGON

Daniel J. Hess

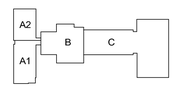

key plan

package	BP2-PERMIT SET
issue date	06/15/2018
revisions	
07/05/2018	BP2-ADD 1
07/16/2018	BP2-ADD 3
project #	17007

SLAB PLAN LEVEL 1 - SECTOR B

A1.12

7/16/2018 1:32:40 PM
C:\BRIC Projects\17007 SSD-MSHS_christie.sterne.rvt

KEYNOTES

A1.01 FACE OF CONCRETE SLAB, TYP.
A1.02 EXTERIOR FACE OF RETAINING WALL, TYP.
A1.03 TURNDOWN EDGE, TYP.
A1.07 STORMWATER DRAINPIPE. OVERFLOW TO DAYLIGHT ABOVE SLAB
A1.08 DEPRESS SLAB @ SHOWERS FOR MED SET & TILE; RECESS TRENCH DRAINS. PER MANUFACTURER'S SPECS. TYP.
A1.10 4" H. CONCRETE CURB
A1.11 18" H CONCRETE BENCH. SEE DETAIL.
A1.14 DROPPED SLAB FOR FLOOR SINKS. CONFIRM SIZE AND DEPTH WITH MANUFACTURER.
A1.15 SUMP PUMP PER MANUFACTURER'S SPECS.
A1.16 JACK HOLE, PER MANFACTURERS SPECIFICATIONS
A1.18 FLOOR BOXES, TYP.

SLAB PLAN NOTES

1 DIMENSIONS SHOWN ARE TO FACE OF SLAB, CENTERLINE OF COLUMN OR GRID LINE UNLESS NOTED OTHERWISE.
2 BEARING WALLS PER STRUCTURAL
3 SLAB SLOPES AT WALKING SURFACES TO MEET 2009 ICC A117.1
4 SLOPES TO DRAINS TO BE MIN. 2%, AND COMPLY WITH 2009 ICC A117.1
5 VERIFY WIDTH AND DEPTH OF RECESSED FLOORS FOR ELEVATOR PITS, WALK-IN FREEZERS/COOLERS, FLOOR SINKS, AND SPECIAL FLOOR ASSEMBLIES WITH MANUFACTURER.
6 DIMENSIONS TO WALLS AND OPENINGS TO BE INDICATED ON DIMENSIONED DRAWINGS.

LEGEND

WALL, SEE STRUCTURAL DWGS.
TOP OF SLAB
FD FLOOR DRAIN, SLOPE TO DRAIN
SD SHOWER DRAIN RECESS
FS FLOOR SINK RECESS
TD TRENCH DRAIN RECESS
COLUMNS, SEE STRUCTURAL

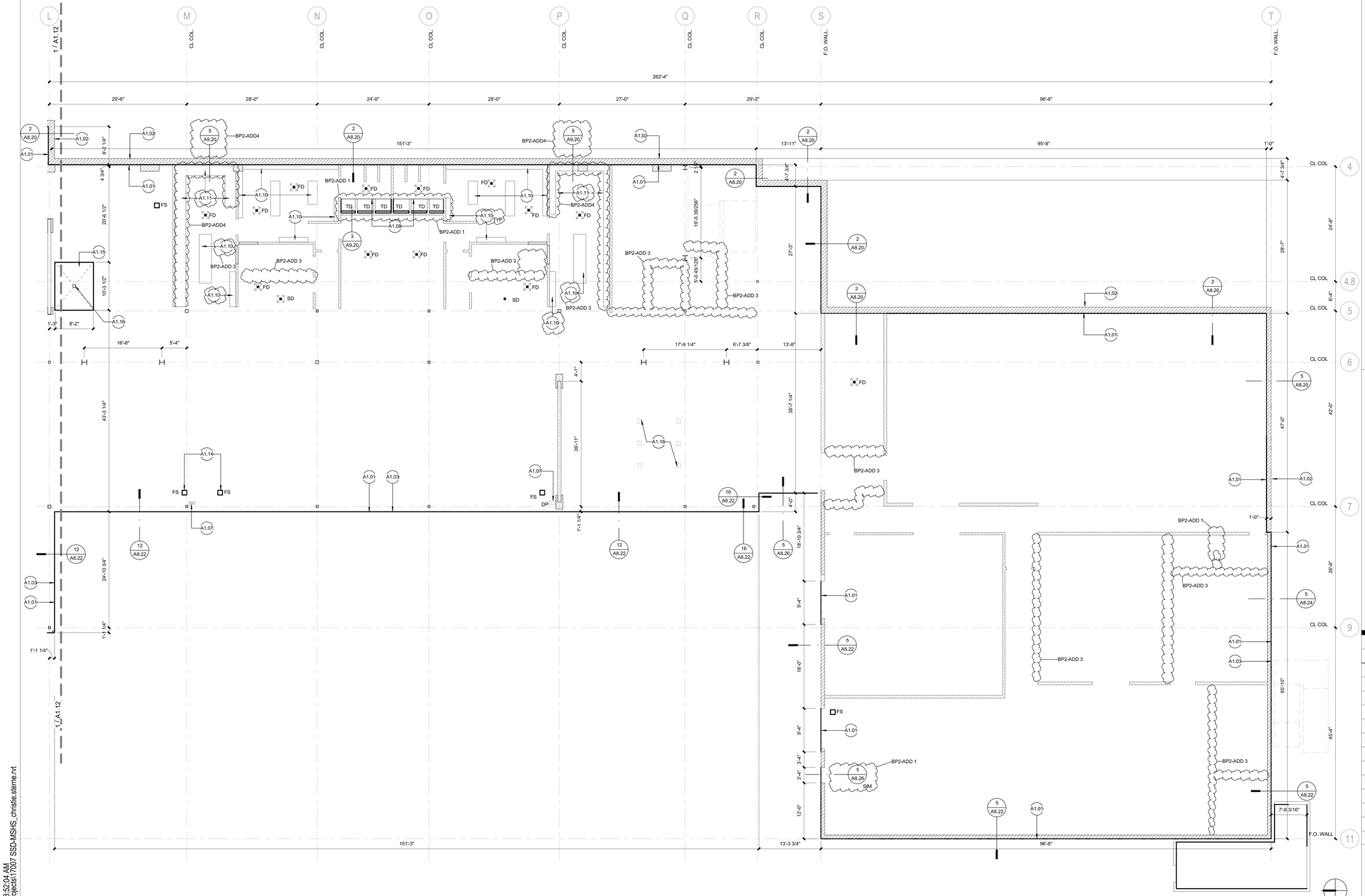

FIRST FLOOR SLAB PLAN - SECTOR C

SCALE: 1/8" = 1'-0"

BRIC ARCHITECTURE, INC.
1233 NW NORTHRUP STREET, SUITE 100
PORTLAND, OR 97209 T 503.595.4900

New Middle School / High School
Seaside School District
1801 S. FRANKLIN STREET, SEASIDE, OR 97138
t: 503-738-5591

REGISTERED ARCHITECT 3473 DANIEL J. HESS PORTLAND, OREGON STATE OF OREGON

Daniel J. Hess

key plan

package	BP2-PERMIT SET
issue date	06/15/2018
revisions	
07/05/2018	BP2-ADD 1
07/16/2018	BP2-ADD 3
7/20/2018	BP2-ADD4
project #	17007

SLAB PLAN LEVEL 1 - SECTOR C

A1.13

7/20/2018 8:52:04 AM
C:\BRIC Projects\17007 SSD-MSHS_christie.sterne.rvt

KEYNOTES

A1.01 FACE OF CONCRETE SLAB, TYP.
A1.03 TURNDOWN EDGE, TYP.
A1.09 AREA TO RECEIVE TOPPING SCREED TO F.F.L.
A1.12 VOLLEYBALL EMBEDS

SLAB PLAN NOTES

1 DIMENSIONS SHOWN ARE TO FACE OF SLAB, CENTERLINE OF COLUMN OR GRID LINE UNLESS NOTED OTHERWISE.
2 BEARING WALLS PER STRUCTURAL
3 SLAB SLOPES AT WALKING SURFACES TO MEET 2009 ICC A117.1
4 SLOPES TO DRAINS TO BE MIN. 2%, AND COMPLY WITH 2009 ICC A117.1
5 VERIFY WIDTH AND DEPTH OF RECESSED FLOORS FOR ELEVATOR PITS, WALK-IN FREEZERS/COOLERS, FLOOR SINKS, AND SPECIAL FLOOR ASSEMBLIES WITH MANUFACTURER.
6 DIMENSIONS TO WALLS AND OPENINGS TO BE INDICATED ON DIMENSIONED DRAWINGS.

LEGEND

WALL, SEE STRUCTURAL DWGS.
TOP OF SLAB
FD FLOOR DRAIN, SLOPE TO DRAIN
SD SHOWER DRAIN RECESS
FS FLOOR SINK RECESS
TD TRENCH DRAIN RECESS
COLUMNS, SEE STRUCTURAL

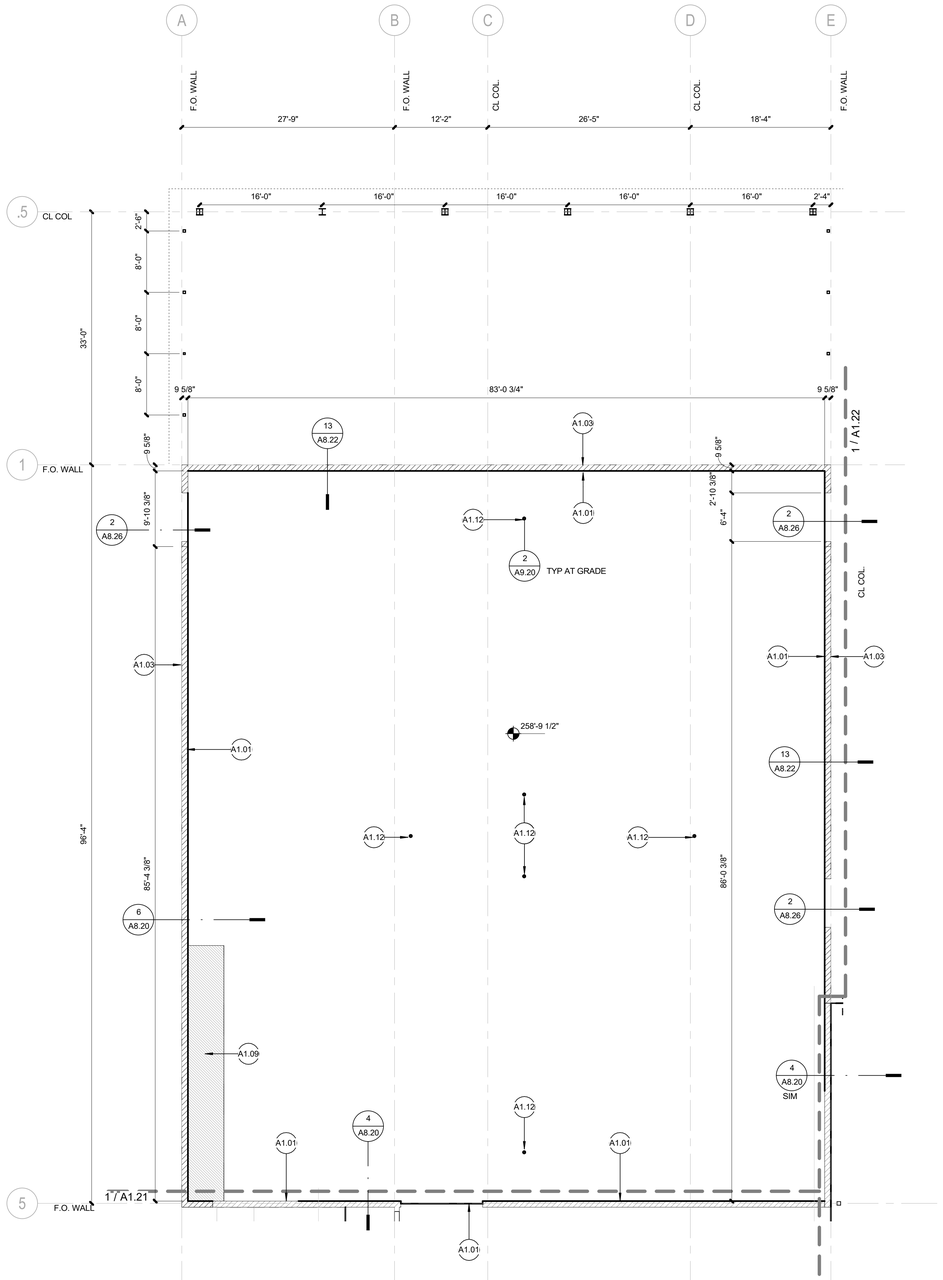

SECOND FLOOR SLAB PLAN - SECTOR A2 (2)
SCALE: 1/8" = 1'-0"

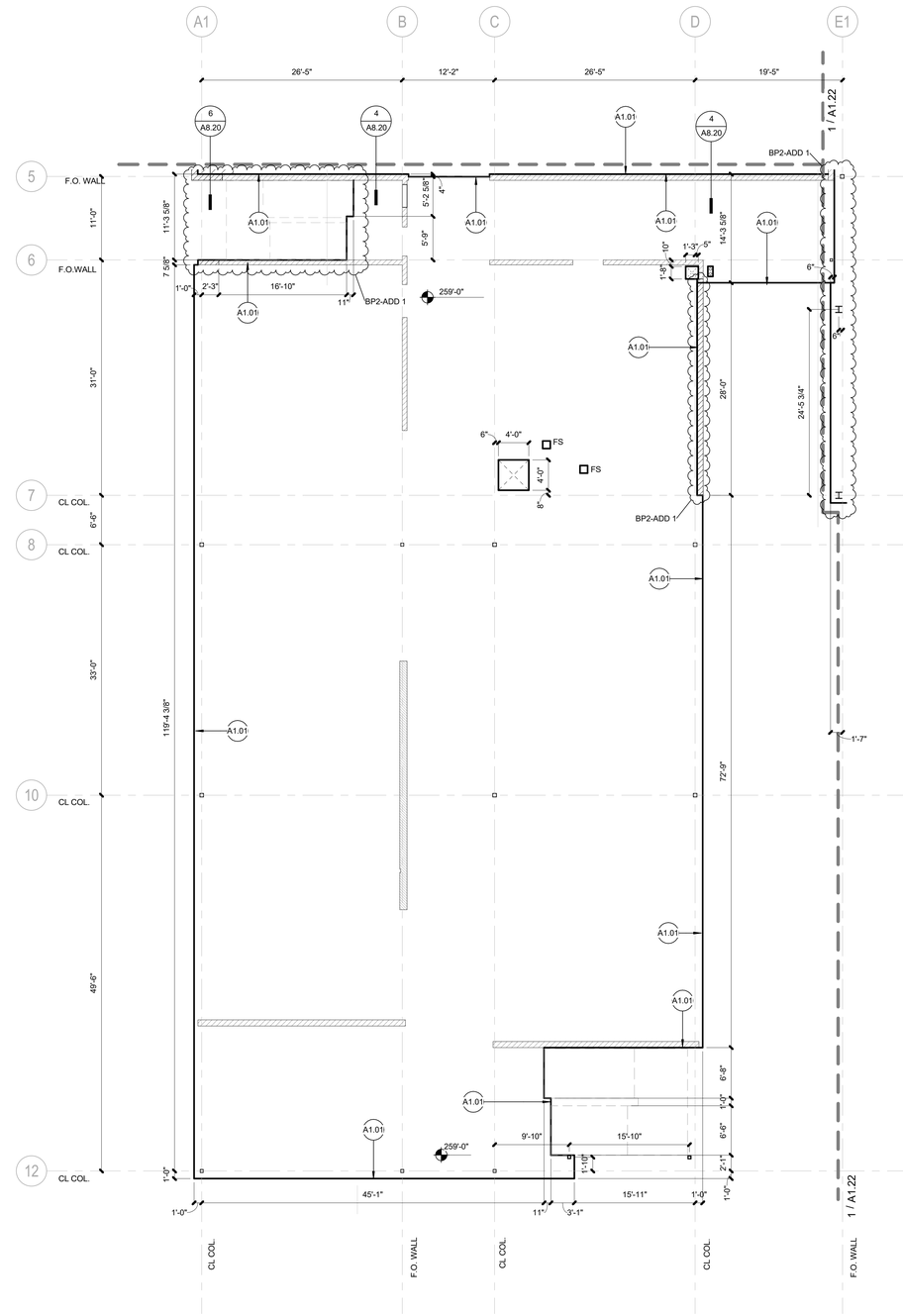

SECOND FLOOR SLAB PLAN - SECTOR A1 (1)
SCALE: 1/8" = 1'-0"

BRIC ARCHITECTURE, INC.
1233 NW NORTHRUP STREET, SUITE 100
PORTLAND, OR 97209 T 503 595 4900

New Middle School / High School
Seaside School District
1801 S. FRANKLIN STREET, SEASIDE, OR 97138
t: 503-738-5591

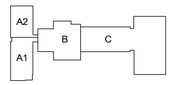

key plan

package	BP2-PERMIT SET
issue date	06/15/2018
revisions	
07/05/2018	BP2-ADD 1
project #	17007

SLAB PLAN LEVEL 2 - SECTOR A1 + A2

A1.21

7/5/2018 11:45:03 AM
C:\BRIC Projects\17007 SSD-MSHS_nick.sackos.rvt

KEYNOTES

A1.01 FACE OF CONCRETE SLAB, TYP.
A1.02 EXTERIOR FACE OF RETAINING WALL, TYP.
A1.03 TURNDOWN EDGE, TYP.
A1.07 STORMWATER DRAINPIPE. OVERFLOW TO DAYLIGHT ABOVE SLAB
A1.17 SHAFT PENETRATION

SLAB PLAN NOTES

1 DIMENSIONS SHOWN ARE TO FACE OF SLAB, CENTERLINE OF COLUMN OR GRID LINE UNLESS NOTED OTHERWISE.
2 BEARING WALLS PER STRUCTURAL
3 SLAB SLOPES AT WALKING SURFACES TO MEET 2009 ICC A117.1
4 SLOPES TO DRAINS TO BE MIN. 2%, AND COMPLY WITH 2009 ICC A117.1
5 VERIFY WIDTH AND DEPTH OF RECESSED FLOORS FOR ELEVATOR PITS, WALK-IN FREEZERS/COOLERS, FLOOR SINKS, AND SPECIAL FLOOR ASSEMBLIES WITH MANUFACTURER.
6 DIMENSIONS TO WALLS AND OPENINGS TO BE INDICATED ON DIMENSIONED DRAWINGS.

LEGEND

WALL, SEE STRUCTURAL DWGS.
TOP OF SLAB
FD FLOOR DRAIN, SLOPE TO DRAIN
SD SHOWER DRAIN RECESS
FS FLOOR SINK RECESS
TD TRENCH DRAIN RECESS
COLUMNS, SEE STRUCTURAL

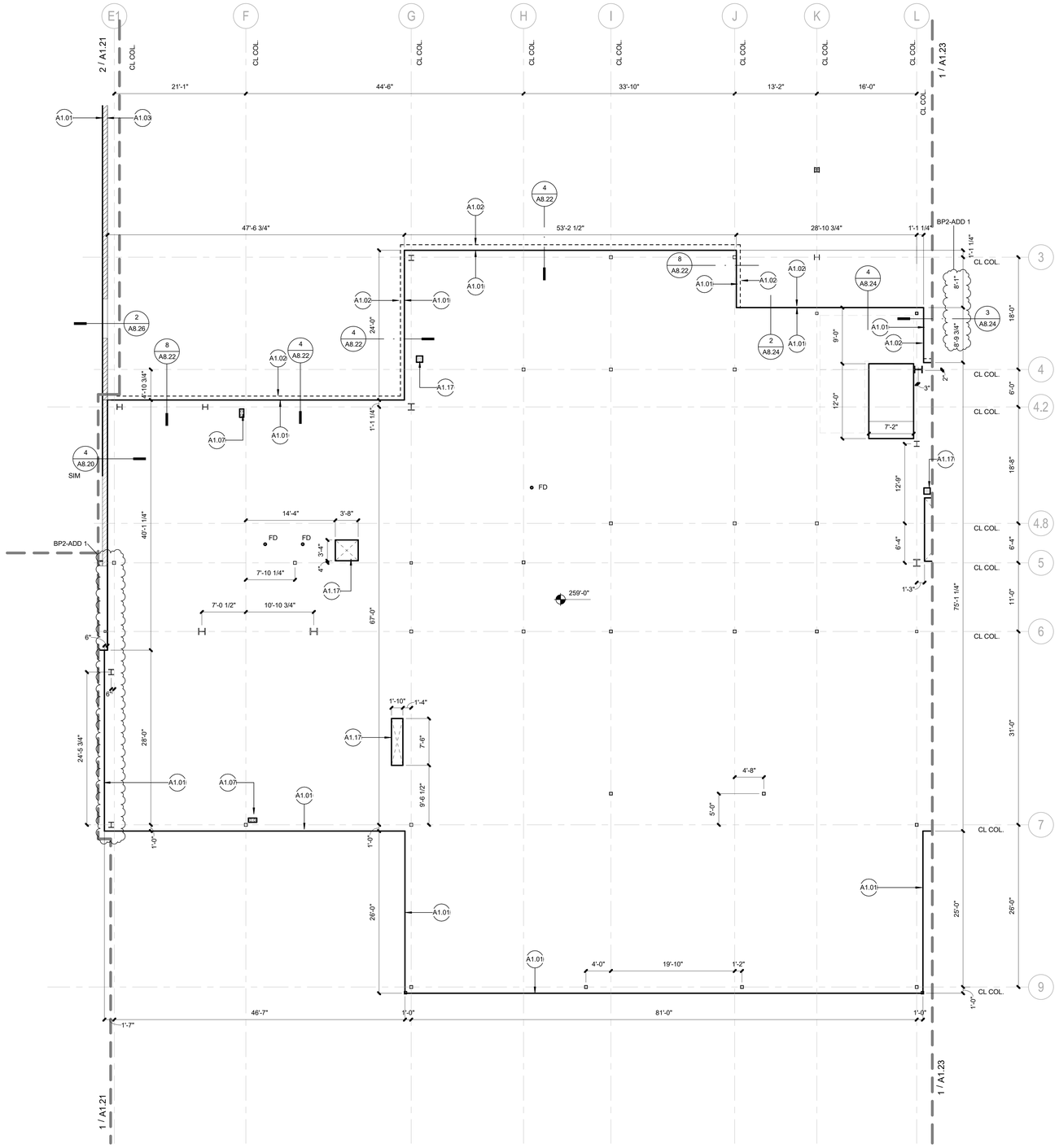

SECOND FLOOR SLAB PLAN - SECTOR B

SCALE: 1/8" = 1'-0"

1

BRIC ARCHITECTURE, INC.
1233 NW NORTHRUP STREET, SUITE 100
PORTLAND, OR 97209 T 503 595 4900

New Middle School / High School
Seaside School District
1801 S. FRANKLIN STREET, SEASIDE, OR 97138
t: 503-738-5591

REGISTERED ARCHITECT
3473
DANIEL J. ROSS
STATE OF OREGON

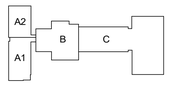

key plan

package	BP2-PERMIT SET
issue date	06/15/2018
revisions	
07/05/2018	BP2-ADD 1

project # 17007

SLAB PLAN LEVEL 2 - SECTOR B

A1.22

7/5/2018 11:45:04 AM
C:\BRIC Projects\17007 SSD-MSHS_nick.sackos.rvt

KEYNOTES

A1.01 FACE OF CONCRETE SLAB, TYP.
A1.02 EXTERIOR FACE OF RETAINING WALL, TYP.
A1.03 TURNDOWN EDGE, TYP.
A1.07 STORMWATER DRAINPIPE. OVERFLOW TO DAYLIGHT ABOVE SLAB
A1.09 AREA TO RECEIVE TOPPING SCREED TO F.F.L.
A1.12 VOLLEYBALL EMBEDS
A1.17 SHAFT PENETRATION

SLAB PLAN NOTES

1 DIMENSIONS SHOWN ARE TO FACE OF SLAB, CENTERLINE OF COLUMN OR GRID LINE UNLESS NOTED OTHERWISE.
2 BEARING WALLS PER STRUCTURAL
3 SLAB SLOPES AT WALKING SURFACES TO MEET 2009 ICC A117.1
4 SLOPES TO DRAINS TO BE MIN. 2%, AND COMPLY WITH 2009 ICC A117.1
5 VERIFY WIDTH AND DEPTH OF RECESSED FLOORS FOR ELEVATOR PITS, WALK-IN FREEZERS/COOLERS, FLOOR SINKS, AND SPECIAL FLOOR ASSEMBLIES WITH MANUFACTURER.
6 DIMENSIONS TO WALLS AND OPENINGS TO BE INDICATED ON DIMENSIONED DRAWINGS.

LEGEND

WALL, SEE STRUCTURAL DWGS.
TOP OF SLAB
FD FLOOR DRAIN, SLOPE TO DRAIN
SD SHOWER DRAIN RECESS
FS FLOOR SINK RECESS
TD TRENCH DRAIN RECESS
COLUMNS, SEE STRUCTURAL

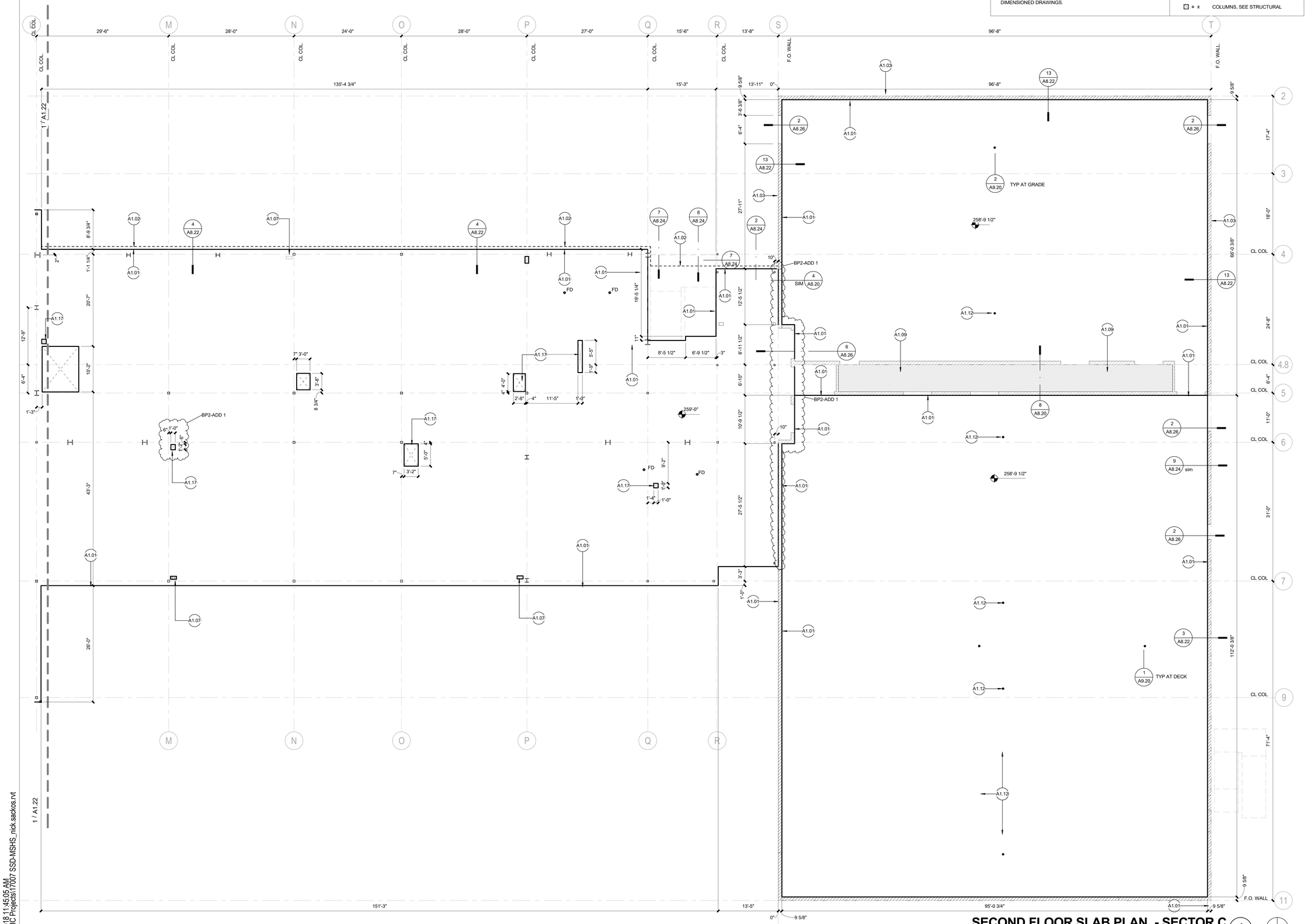

SECOND FLOOR SLAB PLAN - SECTOR C

SCALE: 1/8" = 1'-0"

7/5/2018 11:45:05 AM
C:\BRIC Projects\17007 SSD-MSHS_nick.sackos.rvt

BRIC ARCHITECTURE, INC.
1233 NW NORTHRUP STREET, SUITE 100
PORTLAND, OR 97209 T 503.595.4900

New Middle School / High School
Seaside School District
1801 S. FRANKLIN STREET, SEASIDE, OR 97138
t: 503-738-5591

key plan

package	BP2-PERMIT SET
issue date	06/15/2018
revisions	
07/05/2018	BP2-ADD 1

project # 17007

SLAB PLAN LEVEL 2 - SECTOR C

A1.23

GENERAL NOTES: FLOOR PLAN

1. UNLESS NOTED OTHERWISE, ENTIRE WALL ASSEMBLY OF FIRE RATED AND STC RATED WALLS SHALL EXTEND TO UNDERSIDE OF ROOF OR FLOOR DECK ABOVE.
2. SEE INTERIOR ELEVATIONS FOR LOCATION AND EXTENT OF APPLIED WALL FINISHES.
3. SOUND BATT INSULATION TO EXTEND FULL HEIGHT OF WALL ASSEMBLIES UNLESS NOTED OTHERWISE.
4. SEE STRUCTURAL DRAWINGS FOR WALL STUD SPACING.
5. PROVIDE MOISTURE RESISTANT GYPSUM BOARD ON ALL WALLS OF TOILET ROOMS, KITCHEN AREAS AND BEHIND DRINKING FOUNTAINS.
6. PROVIDE TILE BACKER BOARD BEHIND ALL CERAMIC TILE APPLICATIONS.
7. ASSEMBLIES FOR FIRE RATED WALLS SHALL EXTEND FROM STRUCTURAL FLOOR TO UNDERSIDE OF FLOOR OR ROOF ABOVE UNLESS SPECIFICALLY NOTED OTHERWISE. ALL OPENINGS SHALL BE PROTECTED AS REQUIRED BY CODE.
8. AT FIREWALLS AND SMOKE BARRIERS ABOVE ACCESSIBLE CEILINGS, PROVIDE IDENTIFICATION SIGNAGE, SPACED AT NOT MORE THAN 30 FEET MEASURED HORIZONTALLY, INDICATING "FIRE AND/OR SMOKE BARRIER - PROTECT ALL OPENINGS".

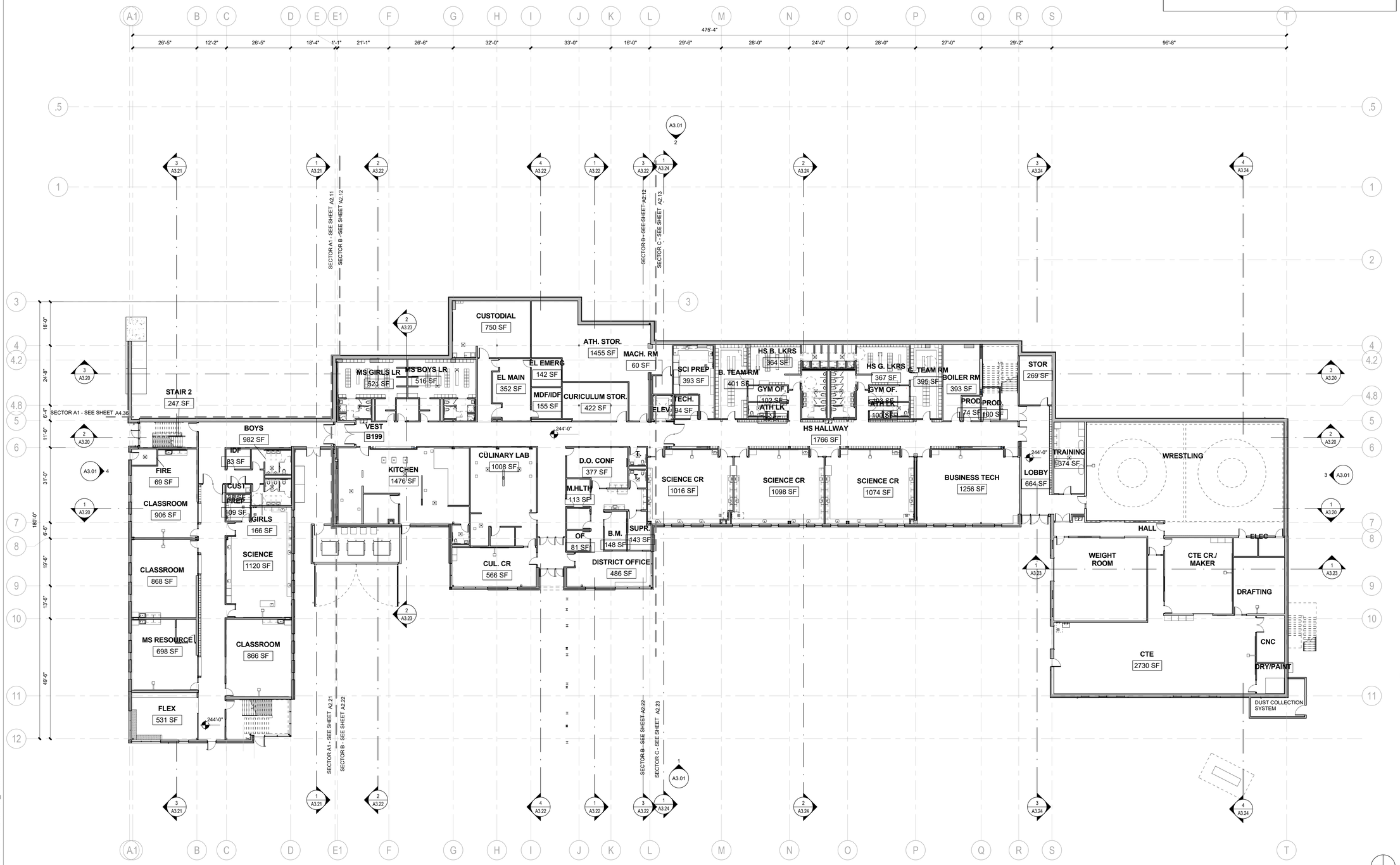

FIRST FLOOR PLAN OVERALL

SCALE: 1/16" = 1'-0"

1

BRIC ARCHITECTURE, INC.

1233 NW NORTHRUP STREET, SUITE 100
PORTLAND, OR 97209 T 503.595.4900

New Middle School / High School

Seaside School District

1801 S. FRANKLIN STREET, SEASIDE, OR 97138
t: 503-738-5591

NOT FOR CONSTRUCTION

key plan

phase	BP2 PERMIT SET
date	6/15/2018
revisions	
project #	17007

OVERALL FLOOR PLAN - LEVEL 1

A2.01

6/15/2018 5:23:27 PM
C:\BRIC Projects\17007 SSD-MSHS_christie.sterne.rvt

GENERAL NOTES: FLOOR PLAN

1. UNLESS NOTED OTHERWISE, ENTIRE WALL ASSEMBLY OF FIRE RATED AND STC RATED WALLS SHALL EXTEND TO UNDERSIDE OF ROOF OR FLOOR DECK ABOVE.
2. SEE INTERIOR ELEVATIONS FOR LOCATION AND EXTENT OF APPLIED WALL FINISHES.
3. SOUND BATT INSULATION TO EXTEND FULL HEIGHT OF WALL ASSEMBLIES UNLESS NOTED OTHERWISE.
4. SEE STRUCTURAL DRAWINGS FOR WALL STUD SPACING.
5. PROVIDE MOISTURE RESISTANT GYPSUM BOARD ON ALL WALLS OF TOILET ROOMS, KITCHEN AREAS AND BEHIND DRINKING FOUNTAINS.
6. PROVIDE TILE BACKER BOARD BEHIND ALL CERAMIC TILE APPLICATIONS.
7. ASSEMBLIES FOR FIRE RATED WALLS SHALL EXTEND FROM STRUCTURAL FLOOR TO UNDERSIDE OF FLOOR OR ROOF ABOVE UNLESS SPECIFICALLY NOTED OTHERWISE. ALL OPENINGS SHALL BE PROTECTED AS REQUIRED BY CODE.
8. AT FIREWALLS AND SMOKE BARRIERS ABOVE ACCESSIBLE CEILINGS, PROVIDE IDENTIFICATION SIGNAGE, SPACED AT NOT MORE THAN 30 FEET MEASURED HORIZONTALLY, INDICATING "FIRE AND/OR SMOKE BARRIER - PROTECT ALL OPENINGS".

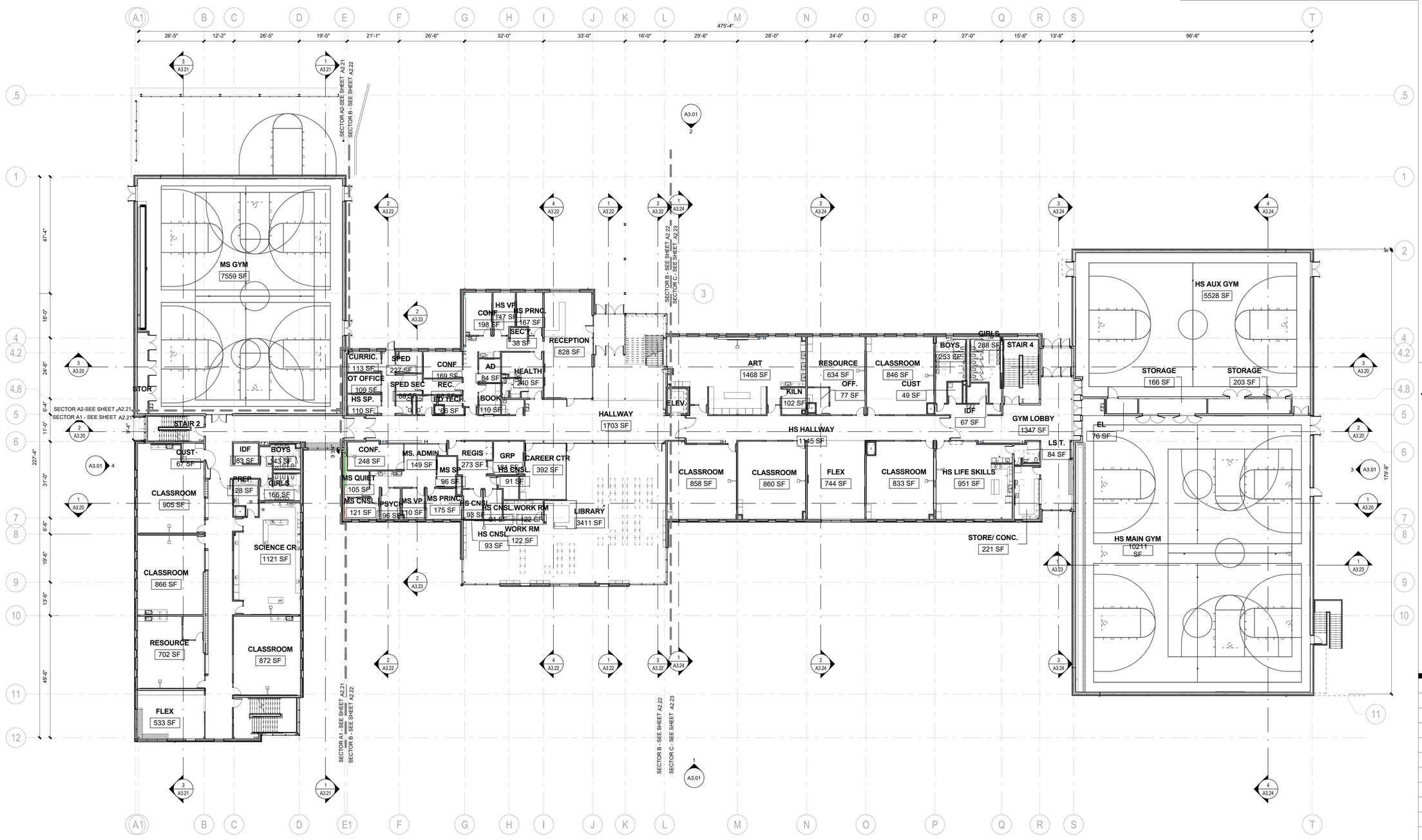

SECOND FLOOR PLAN OVERALL

SCALE: 1/16" = 1'-0"

1

BR|IC ARCHITECTURE, INC.
1233 NW NORTHRUP STREET, SUITE 100
PORTLAND, OR 97209 T 503.595.4900

New Middle School / High School
Seaside School District
1801 S. FRANKLIN STREET, SEASIDE, OR 97138
t: 503-738-5591

NOT FOR CONSTRUCTION

key plan

phase	BP2 PERMIT SET
date	6/15/2018
revisions	
project #	17007

OVERALL FLOOR PLAN - LEVEL 2

A2.02

6/15/2018 5:23:32 PM
C:\BRIC Projects\17007 SSD-MSHS_christie.sterne.rvt

GENERAL NOTES: FLOOR PLAN

1. UNLESS NOTED OTHERWISE, ENTIRE WALL ASSEMBLY OF FIRE RATED AND STC RATED WALLS SHALL EXTEND TO UNDERSIDE OF ROOF OR FLOOR DECK ABOVE.
2. SEE INTERIOR ELEVATIONS FOR LOCATION AND EXTENT OF APPLIED WALL FINISHES.
3. SOUND BATT INSULATION TO EXTEND FULL HEIGHT OF WALL ASSEMBLIES UNLESS NOTED OTHERWISE.
4. SEE STRUCTURAL DRAWINGS FOR WALL STUD SPACING.
5. PROVIDE MOISTURE RESISTANT GYPSUM BOARD ON ALL WALLS OF TOILET ROOMS, KITCHEN AREAS AND BEHIND DRINKING FOUNTAINS.
6. PROVIDE TILE BACKER BOARD BEHIND ALL CERAMIC TILE APPLICATIONS.
7. ASSEMBLIES FOR FIRE RATED WALLS SHALL EXTEND FROM STRUCTURAL FLOOR TO UNDERSIDE OF FLOOR OR ROOF ABOVE UNLESS SPECIFICALLY NOTED OTHERWISE. ALL OPENINGS SHALL BE PROTECTED AS REQUIRED BY CODE.
8. AT FIREWALLS AND SMOKE BARRIERS ABOVE ACCESSIBLE CEILINGS, PROVIDE IDENTIFICATION SIGNAGE, SPACED AT NOT MORE THAN 30 FEET MEASURED HORIZONTALLY, INDICATING "FIRE AND/OR SMOKE BARRIER - PROTECT ALL OPENINGS".

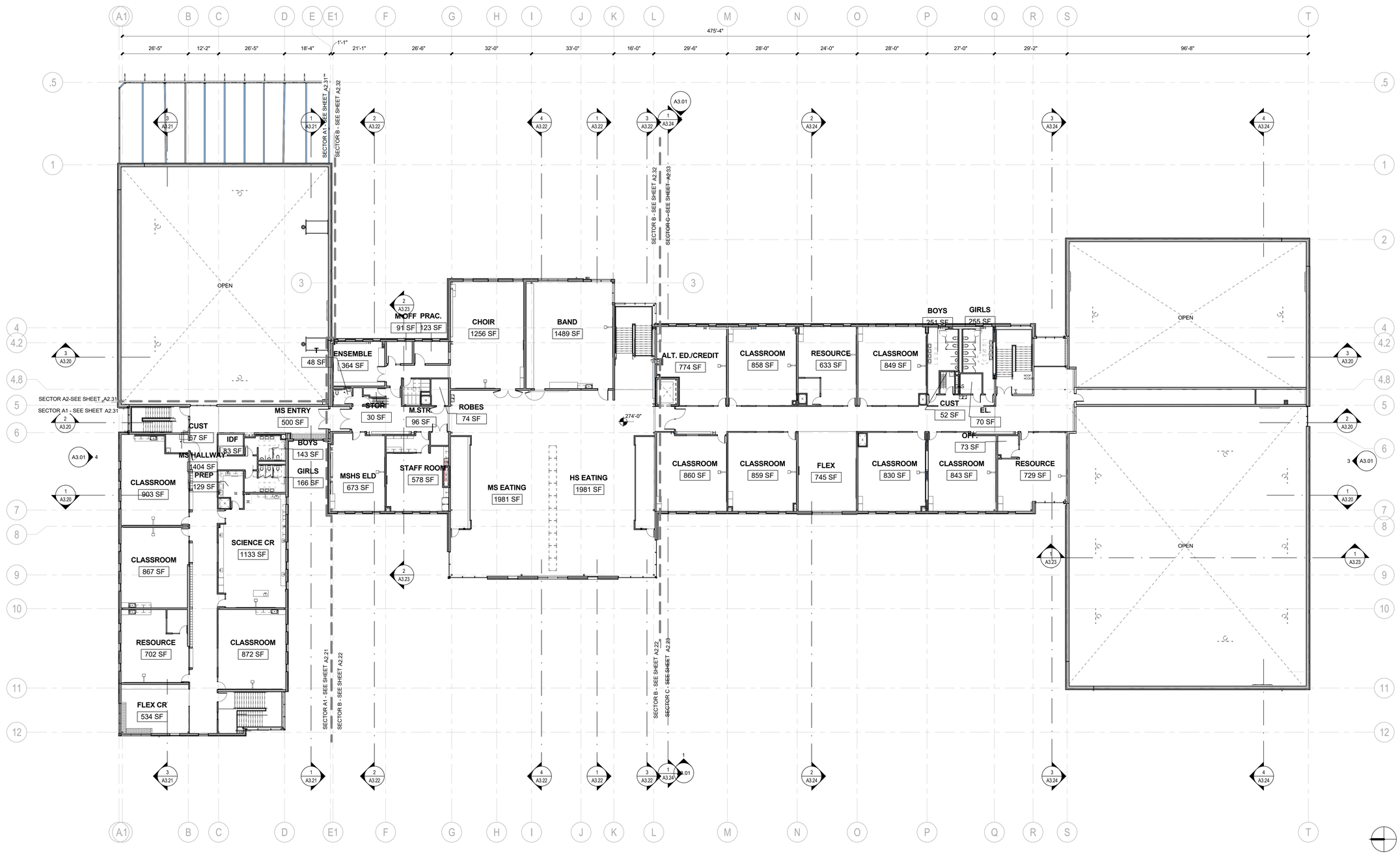

THIRD FLOOR PLAN OVERALL (1)
SCALE: 1/16" = 1'-0"

BRIC ARCHITECTURE, INC.
1233 NW NORTHRUP STREET, SUITE 100
PORTLAND, OR 97209 T 503.595.4900

New Middle School / High School
Seaside School District
1801 S. FRANKLIN STREET, SEASIDE, OR 97138
t: 503-738-5591

NOT FOR CONSTRUCTION

key plan

phase	BP2 PERMIT SET
date	6/15/2018
revisions	
project #	17007

OVERALL FLOOR PLAN - LEVEL 3

A2.03

6/15/2018 5:23:36 PM
C:\BRIC Projects\17007 SSD-MSHS_christie.sterne.rvt

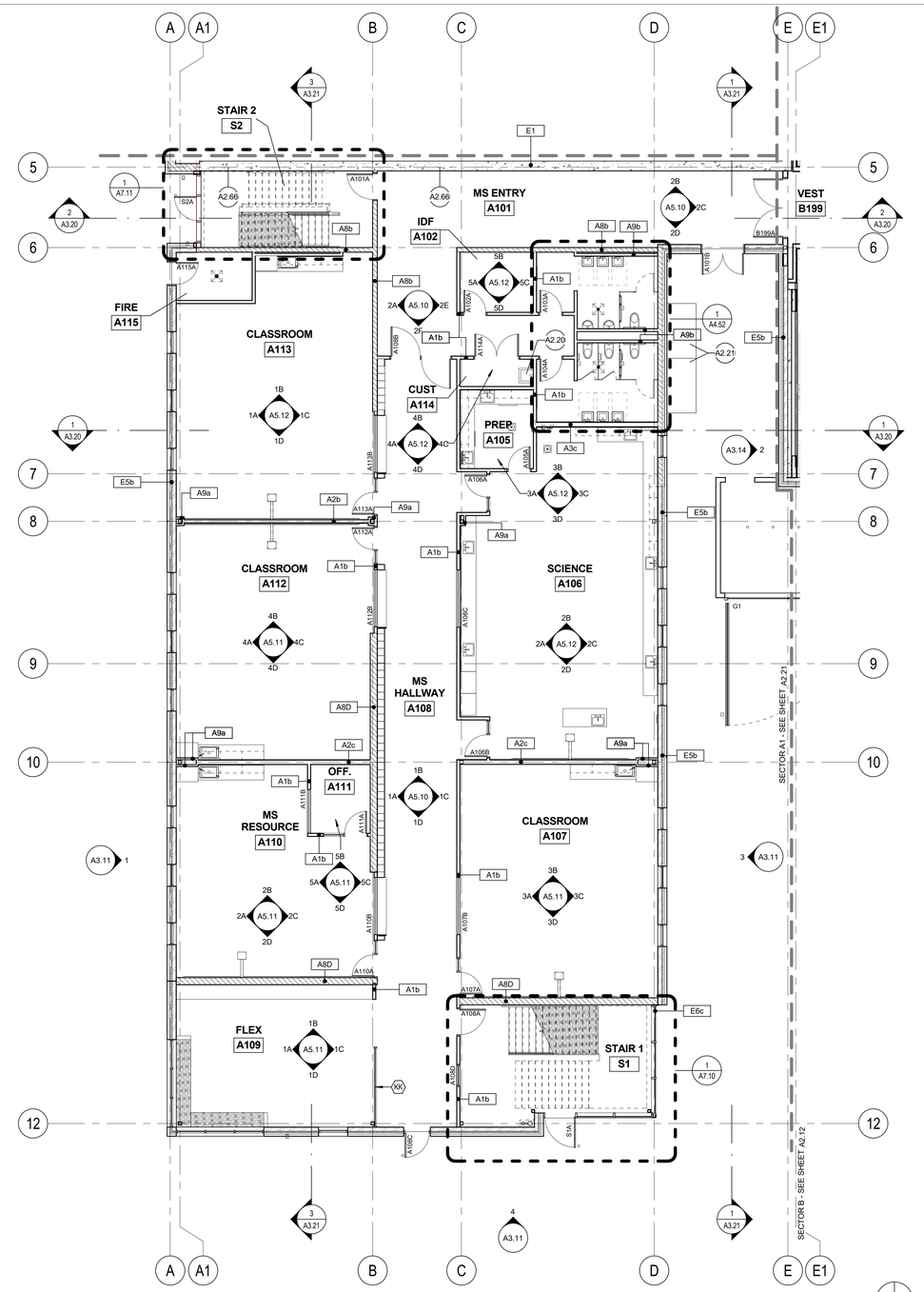

FIRST FLOOR PLAN - SECTOR A1

SCALE: 1/8" = 1'-0"

1

KEYNOTES

A2.20 MOP SINK AND COMBINATION UTILITY SHELF/MOP AND BROOM HOLDER

A2.21 ELECTRICAL METER, SEE ELECTRICAL

A2.66 ARCHITECTURAL QUALITY CONCRETE ON TAGGED SIDE WITH GRAFFITTI COATING

FLOOR PLAN NOTES:

1 DIMENSIONS SHOWN ARE TO FACE OF STUD, FACE OF MASONRY OR CENTERLINE OF COLUMN OR GRID LINE UNLESS NOTED OTHERWISE.

2 DOORS NOT LOCATED BY DIMENSION ARE TO BE CENTERED IN WALLS AS SHOWN OR LOCATED 4 1/2" FROM FACE OF STUD TO FACE OF JAMB.

3 MASONRY DIMENSIONS ARE NOMINAL. COORDINATE ACTUAL ROUGH OPENING MASONRY DIMENSIONS.

4 DIMENSIONS AT RELITES ARE TO CENTER OF ASSEMBLY UNLESS NOTED OTHERWISE.

5 USE DIMENSIONS SHOWN; IN NO CASE SHALL WORKING DIMENSIONS BE SCALED FROM DRAWINGS. CROSS CHECK DETAILS AND DIMENSIONS SHOWN ON THE ARCHITECTURAL DRAWINGS WITH RELATED REQUIREMENTS ON THE STRUCTURAL, MECHANICAL, ELECTRICAL, PLUMBING, AND OTHER DRAWINGS AS APPLICABLE. NOTIFY ARCHITECT OF ANY DISCREPANCIES BEFORE PROCEEDING WITH THE WORK.

6 CONDITIONS AND DETAILS MARKED "TYPICAL" SHALL APPLY IN ALL CASES UNLESS SPECIFICALLY INDICATED OTHERWISE. TYPICAL DETAILS NOT REFERENCED ON DRAWINGS APPLY UNLESS NOTED OTHERWISE BY SPECIFIC NOTES AND DETAILS. WHERE NO SPECIFIC DETAIL IS SHOWN, THE CONSTRUCTION SHALL BE IDENTICAL OR SIMILAR TO THAT INDICATED FOR THE TYPICAL CONSTRUCTION OF THE PROJECT.

7 WHERE NO SPECIFIC STANDARDS ARE APPLIED TO A MATERIAL OR METHOD OF CONSTRUCTION TO BE USED ON THE WORK, ALL SUCH MATERIAL AND METHODS ARE TO MAINTAIN STANDARDS OF THE INDUSTRY AND, WHERE APPLICABLE, MANUFACTURER'S INSTRUCTIONS.

8 LOADING OF CONSTRUCTION MATERIALS SHALL NOT EXCEED THE DESIGN LIVE LOAD PER SQUARE FOOT.

9 ESTABLISH AND VERIFY ALL OPENINGS AND INSERTS FOR ARCHITECTURAL, MECHANICAL, ELECTRICAL, AND PLUMBING WITH APPROPRIATE TRADES, DRAWINGS, AND SUBCONTRACTORS PRIOR TO CONSTRUCTION.

10 PROVIDE ALL NECESSARY ANCHORAGE BLOCKING, BACKING, FRAMING FOR HANDRAILS, DOOR STOPS, CASEWORK, SHELVING, MIRRORS, WALL MOUNTED EQUIPMENT, AND ALL OTHER ITEMS AS REQUIRED FOR COMPLETE INSTALLATION.

11 CONFIRM ALL ROUGH OPENING DIMENSIONS FOR DOORS AND WINDOWS PRIOR TO COMMENCEMENT OF CONSTRUCTION.

12 WHERE A LENGTH OF WALL IS INTERSECTED BY PERPENDICULAR WALLS, WALL TYPE TO BE CONTINUOUS BETWEEN TAGS UNLESS NOTED OTHERWISE.

13 PROVIDE SOLID BLOCKING BETWEEN ROOF JOISTS WHERE WALL RUNS PERPENDICULAR TO ROOF JOISTS. GYPSUM BOARD TO TERMINATE AT ROOF JOISTS.

14 SEE WALL TYPES SHEET(S) FOR DEFLECTION HEAD DETAILS.

15 ROOMS WITHOUT ELEVATIONS TO BE PAINTED GYPSUM BOARD OR GRAFFITI COATING ON EXPOSED CMU BLOCK WALL OR CONCRETE BASED ON WALL TYPE.

16 INTERIOR WALLS TO BE A1b, UNLESS NOTED OTHERWISE.

17 EXTERIOR DOORS AT MEP AREAS AND KITCHEN TO BE HOLLOW METAL, UNLESS NOTED OTHERWISE.

18 STOREFRONT TYPES ON THE INTERIOR ARE NOTED WITH (AA), SEE STOREFRONT TYPES

WALL TYPE NOTES:

A1 — WALL CONSTRUCTION TYPE - SEE WALL TYPES

1 HR — FIRE RATED CONSTRUCTION DESIGNATION (IN HOURS)

STC — STC RATING

1 NOTED WALL TYPE DEPICTS TYPICAL WALL CONSTRUCTION. SEE ELEVATIONS, SECTIONS, AND DETAILS FOR ADDITIONAL INFORMATION.

2 PROVIDE MOISTURE RESISTANT GYPSUM BOARD IN ALL TOILET ROOMS. PROVIDE TILE BACKER BOARD BEHIND ALL CERAMIC TILE APPLICATIONS. MOISTURE RESISTANT GYPSUM BOARD SHALL ALSO BE USED AT ALL KITCHEN AREAS AND BEHIND DRINKING FOUNTAINS.

3 SEE INTERIOR ELEVATIONS FOR LOCATIONS AND EXTENTS OF APPLIED WALL FINISHES.

4 WHERE A LENGTH OF WALL IS INTERSECTED BY PERPENDICULAR WALLS, WALL TYPE TO BE CONTINUOUS BETWEEN TAGS UNLESS OTHERWISE NOTED.

6/15/2018 5:23:40 PM
C:\BRIC Projects\17007 SSD-MSHS_christie.sterne.rvt

BRIC ARCHITECTURE, INC.
1233 NW NORTHRUP STREET, SUITE 100
PORTLAND, OR 97209 T 503.595.4900

New Middle School / High School
Seaside School District
1801 S. FRANKLIN STREET, SEASIDE, OR 97138
t: 503-738-5591

NOT FOR CONSTRUCTION

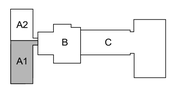

key plan

phase	BP2 PERMIT SET
date	6/15/2018
revisions	
project #	17007

FLOOR PLAN LEVEL 1 - SECTOR A1

A2.11

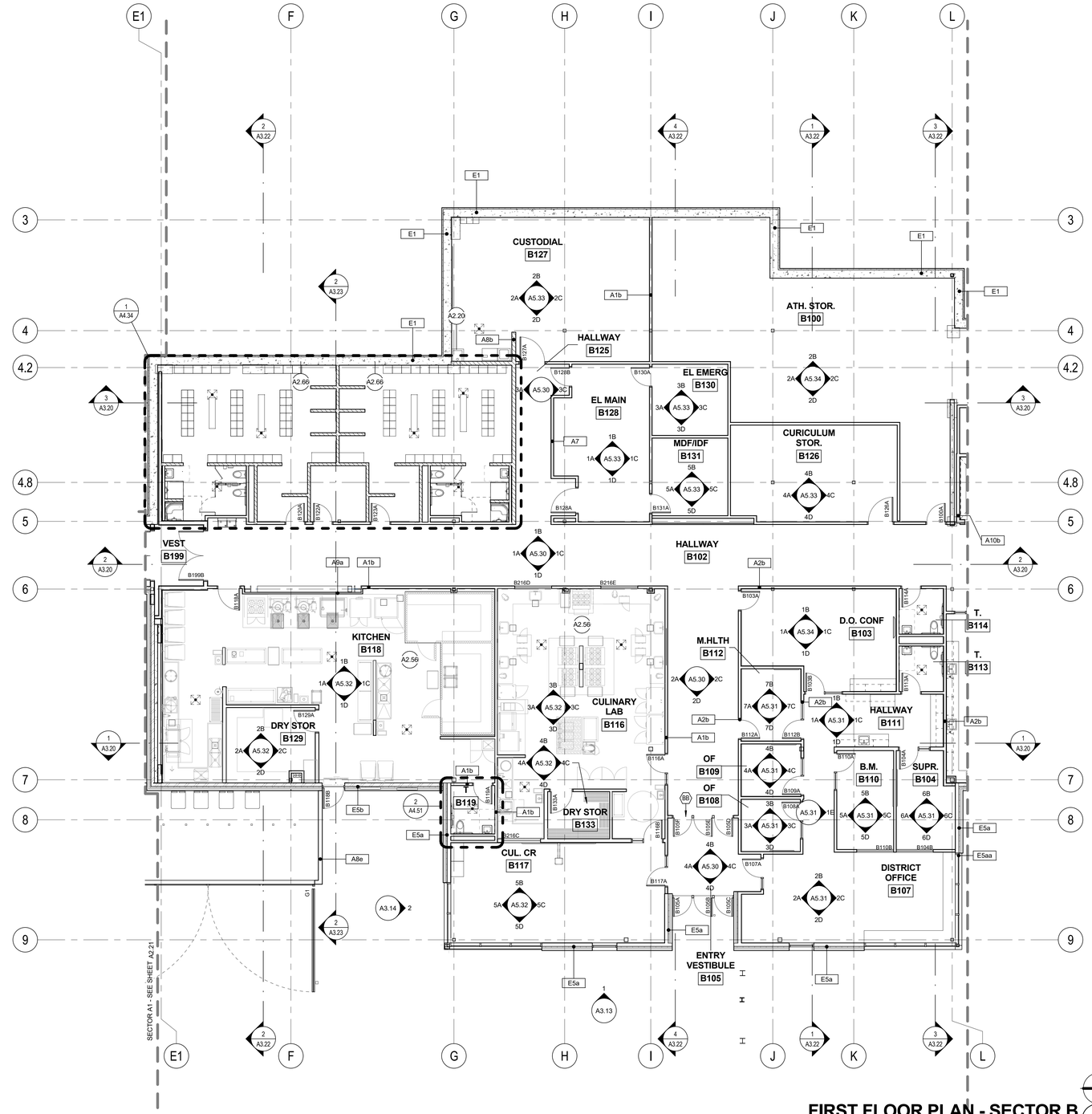

FIRST FLOOR PLAN - SECTOR B

SCALE: 1/8" = 1'-0"

1

FLOOR PLAN NOTES:

1. DIMENSIONS SHOWN ARE TO FACE OF STUD, FACE OF MASONRY OR CENTERLINE OF COLUMN OR GRID LINE UNLESS NOTED OTHERWISE.
2. DOORS NOT LOCATED BY DIMENSION ARE TO BE CENTERED IN WALLS AS SHOWN OR LOCATED 4 1/2" FROM FACE OF STUD TO FACE OF JAMB.
3. MASONRY DIMENSIONS ARE NOMINAL. COORDINATE ACTUAL ROUGH OPENING MASONRY DIMENSIONS.
4. DIMENSIONS AT RELITES ARE TO CENTER OF ASSEMBLY UNLESS NOTED OTHERWISE.
5. USE DIMENSIONS SHOWN; IN NO CASE SHALL WORKING DIMENSIONS BE SCALED FROM DRAWINGS. CROSS CHECK DETAILS AND DIMENSIONS SHOWN ON THE ARCHITECTURAL DRAWINGS WITH RELATED REQUIREMENTS ON THE STRUCTURAL, MECHANICAL, ELECTRICAL, PLUMBING, AND OTHER DRAWINGS AS APPLICABLE. NOTIFY ARCHITECT OF ANY DISCREPANCIES BEFORE PROCEEDING WITH THE WORK.
6. CONDITIONS AND DETAILS MARKED "TYPICAL" SHALL APPLY IN ALL CASES UNLESS SPECIFICALLY INDICATED OTHERWISE. TYPICAL DETAILS NOT REFERENCED ON DRAWINGS APPLY UNLESS NOTED OTHERWISE BY SPECIFIC NOTES AND DETAILS. WHERE NO SPECIFIC DETAIL IS SHOWN, THE CONSTRUCTION SHALL BE IDENTICAL OR SIMILAR TO THAT INDICATED FOR THE TYPICAL CONSTRUCTION OF THE PROJECT.
7. WHERE NO SPECIFIC STANDARDS ARE APPLIED TO A MATERIAL OR METHOD OF CONSTRUCTION TO BE USED ON THE WORK, ALL SUCH MATERIAL AND METHODS ARE TO MAINTAIN STANDARDS OF THE INDUSTRY AND, WHERE APPLICABLE, MANUFACTURER'S INSTRUCTIONS.
8. LOADING OF CONSTRUCTION MATERIALS SHALL NOT EXCEED THE DESIGN LIVE LOAD PER SQUARE FOOT.
9. ESTABLISH AND VERIFY ALL OPENINGS AND INSERTS FOR ARCHITECTURAL, MECHANICAL, ELECTRICAL, AND PLUMBING WITH APPROPRIATE TRADES, DRAWINGS, AND SUBCONTRACTORS PRIOR TO CONSTRUCTION.
10. PROVIDE ALL NECESSARY ANCHORAGE BLOCKING, BACKING, FRAMING FOR HANDRAILS, DOOR STOPS, CASEWORK, SHELVING, MIRRORS, WALL MOUNTED EQUIPMENT, AND ALL OTHER ITEMS AS REQUIRED FOR COMPLETE INSTALLATION.
11. CONFIRM ALL ROUGH OPENING DIMENSIONS FOR DOORS AND WINDOWS PRIOR TO COMMENCEMENT OF CONSTRUCTION.
12. WHERE A LENGTH OF WALL IS INTERSECTED BY PERPENDICULAR WALLS, WALL TYPE TO BE CONTINUOUS BETWEEN TAGS UNLESS NOTED OTHERWISE.
13. PROVIDE SOLID BLOCKING BETWEEN ROOF JOISTS WHERE WALL RUNS PERPENDICULAR TO ROOF JOISTS. GYPSUM BOARD TO TERMINATE AT ROOF JOISTS.
14. SEE WALL TYPES SHEET(S) FOR DEFLECTION HEAD DETAILS.
15. ROOMS WITHOUT ELEVATIONS TO BE PAINTED GYPSUM BOARD OR GRAFFITI COATING ON EXPOSED CMU BLOCK WALL OR CONCRETE BASED ON WALL TYPE.
16. INTERIOR WALLS TO BE A1b, UNLESS NOTED OTHERWISE.
17. EXTERIOR DOORS AT MEP AREAS AND KITCHEN TO BE HOLLOW METAL, UNLESS NOTED OTHERWISE.
18. STOREFRONT TYPES ON THE INTERIOR ARE NOTED WITH (AA), SEE STOREFRONT TYPES

WALL TYPE NOTES:

A1	WALL CONSTRUCTION TYPE - SEE WALL TYPES
1 HR	FIRE RATED CONSTRUCTION DESIGNATION (IN HOURS)
STC	STC RATING

1. NOTED WALL TYPE DEPICTS TYPICAL WALL CONSTRUCTION. SEE ELEVATIONS, SECTIONS, AND DETAILS FOR ADDITIONAL INFORMATION.
2. PROVIDE MOISTURE RESISTANT GYPSUM BOARD IN ALL TOILET ROOMS. PROVIDE TILE BACKER BOARD BEHIND ALL CERAMIC TILE APPLICATIONS. MOISTURE RESISTANT GYPSUM BOARD SHALL ALSO BE USED AT ALL KITCHEN AREAS AND BEHIND DRINKING FOUNTAINS.
3. SEE INTERIOR ELEVATIONS FOR LOCATIONS AND EXTENTS OF APPLIED WALL FINISHES.
4. WHERE A LENGTH OF WALL IS INTERSECTED BY PERPENDICULAR WALLS, WALL TYPE TO BE CONTINUOUS BETWEEN TAGS UNLESS OTHERWISE NOTED.

KEYNOTES

A2.20	MOP SINK AND COMBINATION UTILITY SHELF/MOP AND BROOM HOLDER
A2.56	SEE FOOD SERVICE DRAWINGS
A2.66	ARCHITECTURAL QUALITY CONCRETE ON TAGGED SIDE WITH GRAFFITTI COATING

BR|IC ARCHITECTURE, INC.
1233 NW NORTHRUP STREET, SUITE 100
PORTLAND, OR 97209 T 503.595.4900

New Middle School / High School
Seaside School District
1801 S. FRANKLIN STREET, SEASIDE, OR 97138
t: 503-738-5591

NOT FOR CONSTRUCTION

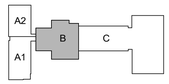

key plan

phase	BP2 PERMIT SET
date	6/15/2018
revisions	
project #	17007

FLOOR PLAN LEVEL 1 - SECTOR B

A2.12

6/15/2018 5:23:41 PM
C:\BRIC Projects\17007 SSD-MSHS_christie.sterne.rvt

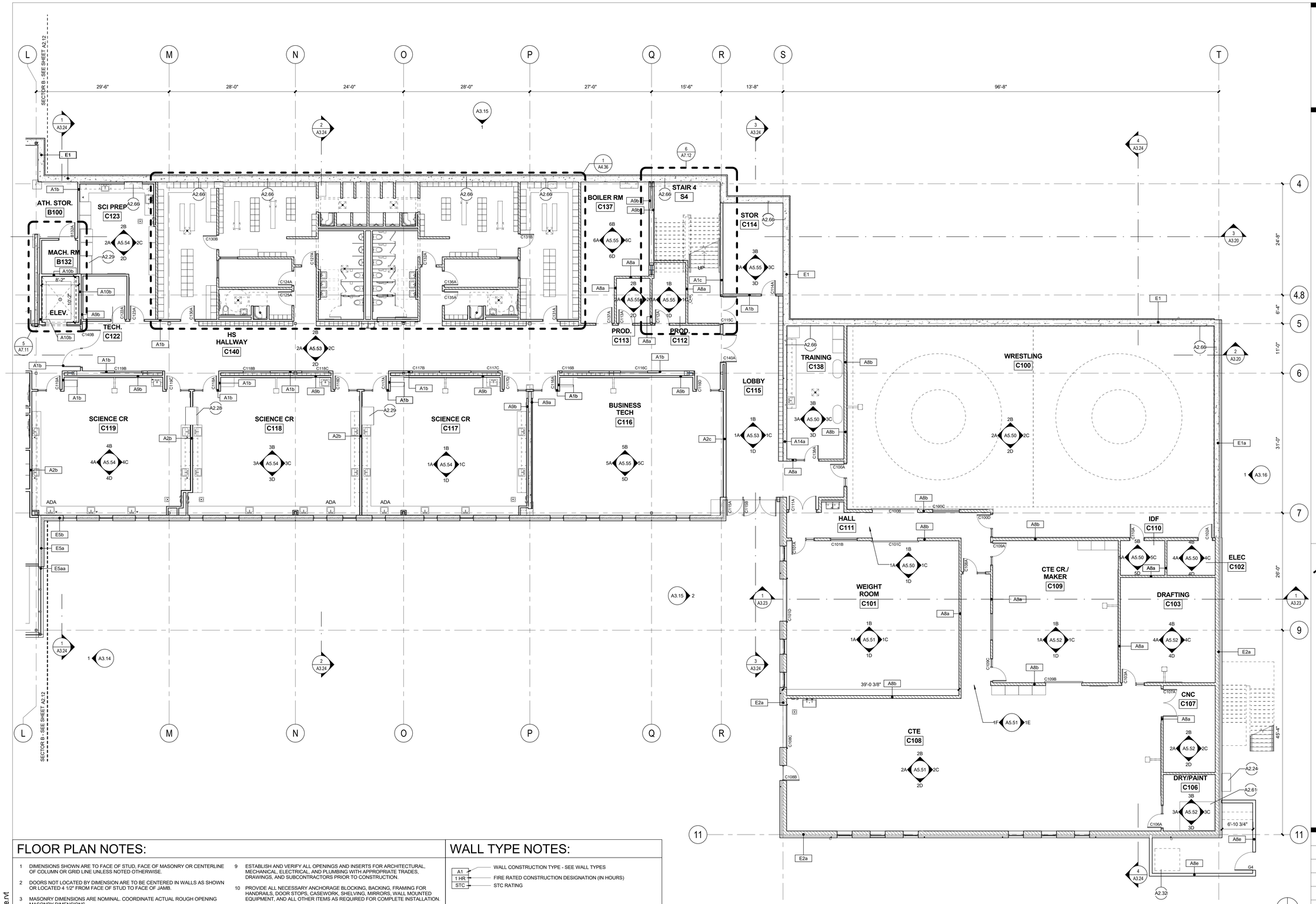

FLOOR PLAN NOTES:

1. DIMENSIONS SHOWN ARE TO FACE OF STUD, FACE OF MASONRY OR CENTERLINE OF COLUMN OR GRID LINE UNLESS NOTED OTHERWISE.
2. DOORS NOT LOCATED BY DIMENSION ARE TO BE CENTERED IN WALLS AS SHOWN OR LOCATED 4 1/2" FROM FACE OF STUD TO FACE OF JAMB.
3. MASONRY DIMENSIONS ARE NOMINAL. COORDINATE ACTUAL ROUGH OPENING MASONRY DIMENSIONS.
4. DIMENSIONS AT RELITES ARE TO CENTER OF ASSEMBLY UNLESS NOTED OTHERWISE.
5. USE DIMENSIONS SHOWN; IN NO CASE SHALL WORKING DIMENSIONS BE SCALED FROM DRAWINGS. CROSS CHECK DETAILS AND DIMENSIONS SHOWN ON THE ARCHITECTURAL DRAWINGS WITH RELATED REQUIREMENTS ON THE STRUCTURAL, MECHANICAL, ELECTRICAL, PLUMBING, AND OTHER DRAWINGS AS APPLICABLE. NOTIFY ARCHITECT OF ANY DISCREPANCIES BEFORE PROCEEDING WITH THE WORK.
6. CONDITIONS AND DETAILS MARKED "TYPICAL" SHALL APPLY IN ALL CASES UNLESS SPECIFICALLY INDICATED OTHERWISE. TYPICAL DETAILS NOT REFERENCED ON DRAWINGS APPLY UNLESS NOTED OTHERWISE BY SPECIFIC NOTES AND DETAILS. WHERE NO SPECIFIC DETAIL IS SHOWN, THE CONSTRUCTION SHALL BE IDENTICAL OR SIMILAR TO THAT INDICATED FOR THE TYPICAL CONSTRUCTION OF THE PROJECT.
7. WHERE NO SPECIFIC STANDARDS ARE APPLIED TO A MATERIAL OR METHOD OF CONSTRUCTION TO BE USED ON THE WORK, ALL SUCH MATERIAL AND METHODS ARE TO MAINTAIN STANDARDS OF THE INDUSTRY AND, WHERE APPLICABLE, MANUFACTURER'S INSTRUCTIONS.
8. LOADING OF CONSTRUCTION MATERIALS SHALL NOT EXCEED THE DESIGN LIVE LOAD PER SQUARE FOOT.
9. ESTABLISH AND VERIFY ALL OPENINGS AND INSERTS FOR ARCHITECTURAL, MECHANICAL, ELECTRICAL, AND PLUMBING WITH APPROPRIATE TRADES, DRAWINGS, AND SUBCONTRACTORS PRIOR TO CONSTRUCTION.
10. PROVIDE ALL NECESSARY ANCHORAGE BLOCKING, BACKING, FRAMING FOR HANDRAILS, DOOR STOPS, CASEWORK, SHELVING, MIRRORS, WALL MOUNTED EQUIPMENT, AND ALL OTHER ITEMS AS REQUIRED FOR COMPLETE INSTALLATION.
11. CONFIRM ALL ROUGH OPENING DIMENSIONS FOR DOORS AND WINDOWS PRIOR TO COMMENCEMENT OF CONSTRUCTION.
12. WHERE A LENGTH OF WALL IS INTERSECTED BY PERPENDICULAR WALLS, WALL TYPE TO BE CONTINUOUS BETWEEN TAGS UNLESS NOTED OTHERWISE.
13. PROVIDE SOLID BLOCKING BETWEEN ROOF JOISTS WHERE WALL RUNS PERPENDICULAR TO ROOF JOISTS. GYPSUM BOARD TO TERMINATE AT ROOF JOISTS.
14. SEE WALL TYPES SHEET(S) FOR DEFLECTION HEAD DETAILS.
15. ROOMS WITHOUT ELEVATIONS TO BE PAINTED GYPSUM BOARD OR GRAFFITI COATING ON EXPOSED CMU BLOCK WALL OR CONCRETE BASED ON WALL TYPE.
16. INTERIOR WALLS TO BE A1b, UNLESS NOTED OTHERWISE.
17. EXTERIOR DOORS AT MEP AREAS AND KITCHEN TO BE HOLLOW METAL, UNLESS NOTED OTHERWISE.
18. STOREFRONT TYPES ON THE INTERIOR ARE NOTED WITH (AA), SEE STOREFRONT TYPES

WALL TYPE NOTES:

A1	WALL CONSTRUCTION TYPE - SEE WALL TYPES
1 HR	FIRE RATED CONSTRUCTION DESIGNATION (IN HOURS)
STC	STC RATING

1. NOTED WALL TYPE DEPICTS TYPICAL WALL CONSTRUCTION. SEE ELEVATIONS, SECTIONS, AND DETAILS FOR ADDITIONAL INFORMATION.
2. PROVIDE MOISTURE RESISTANT GYPSUM BOARD IN ALL TOILET ROOMS. PROVIDE TILE BACKER BOARD BEHIND ALL CERAMIC TILE APPLICATIONS. MOISTURE RESISTANT GYPSUM BOARD SHALL ALSO BE USED AT ALL KITCHEN AREAS AND BEHIND DRINKING FOUNTAINS.
3. SEE INTERIOR ELEVATIONS FOR LOCATIONS AND EXTENTS OF APPLIED WALL FINISHES.
4. WHERE A LENGTH OF WALL IS INTERSECTED BY PERPENDICULAR WALLS, WALL TYPE TO BE CONTINUOUS BETWEEN TAGS UNLESS OTHERWISE NOTED.

KEYNOTES

A2.24 GAS METER, SEE PLUMBING
A2.28 2-SIDED FUME HOOD WITH BASE CABINET BY MFR (TOTAL OF 1)
A2.29 1-SIDED FUME HOOD WITH BASE CABINET BY MFR (TOTAL OF 2)
A2.32 DUST COLLECTOR
A2.61 PAINT BOOTH
A2.66 ARCHITECTURAL QUALITY CONCRETE ON TAGGED SIDE WITH GRAFFITTI COATING

FIRST FLOOR PLAN - SECTOR C 01

SCALE: 1/8" = 1'-0"

BR|IC ARCHITECTURE, INC.
1233 NW NORTHRUP STREET, SUITE 100
PORTLAND, OR 97209 T 503.595.4900

New Middle School / High School
Seaside School District
1801 S. FRANKLIN STREET, SEASIDE, OR 97138
t: 503-738-5591

NOT FOR CONSTRUCTION

key plan

phase	BP2 PERMIT SET
date	6/15/2018
revisions	
project #	17007

FLOOR PLAN LEVEL 1 - SECTOR C

A2.13

6/15/2018 5:23:47 PM
C:\BRIC Projects\17007 SSD-MSHS_christie.sterne.rvt

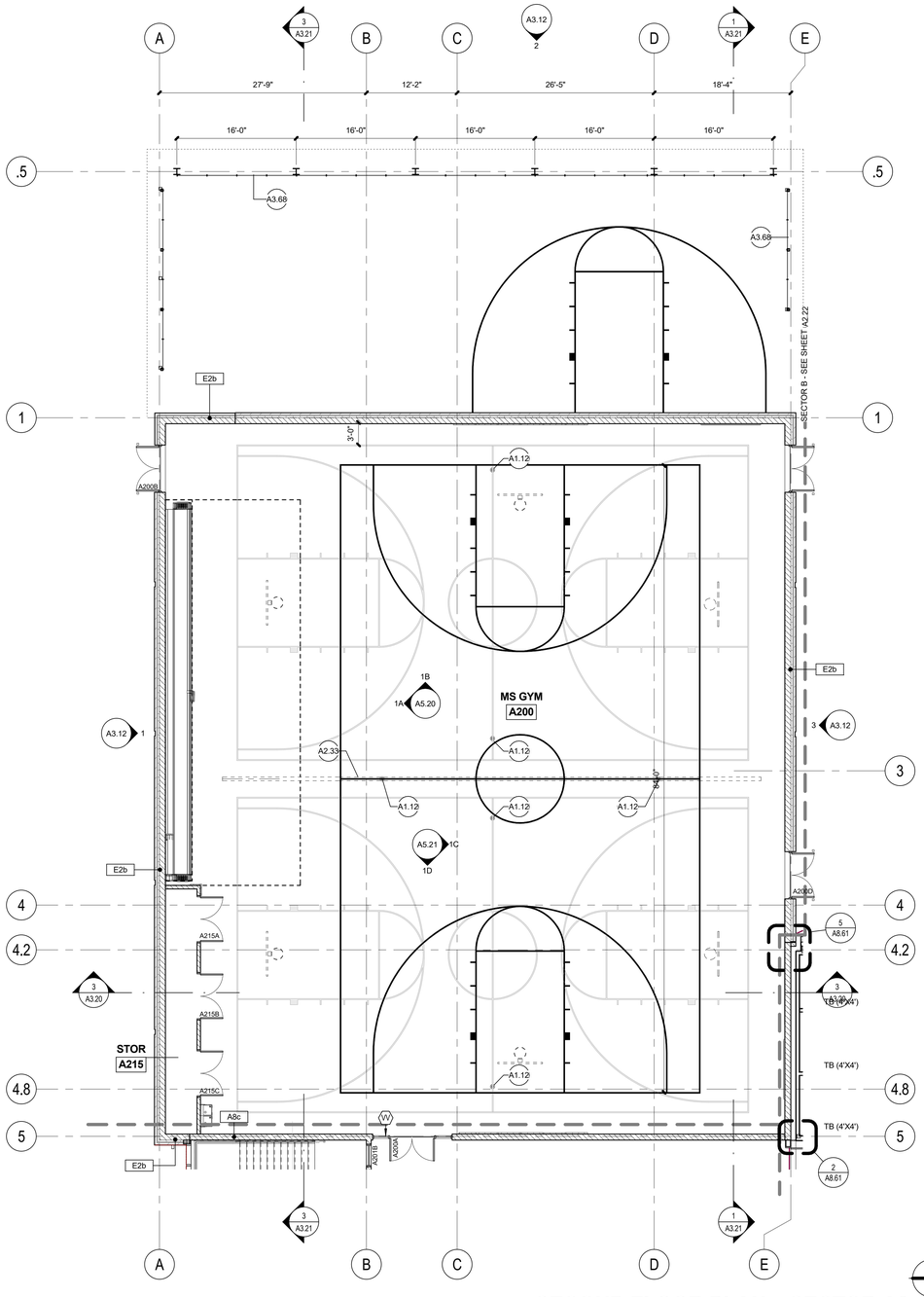

SECOND FLOOR PLAN - SECTOR A2

SCALE: 1/8" = 1'-0"

2

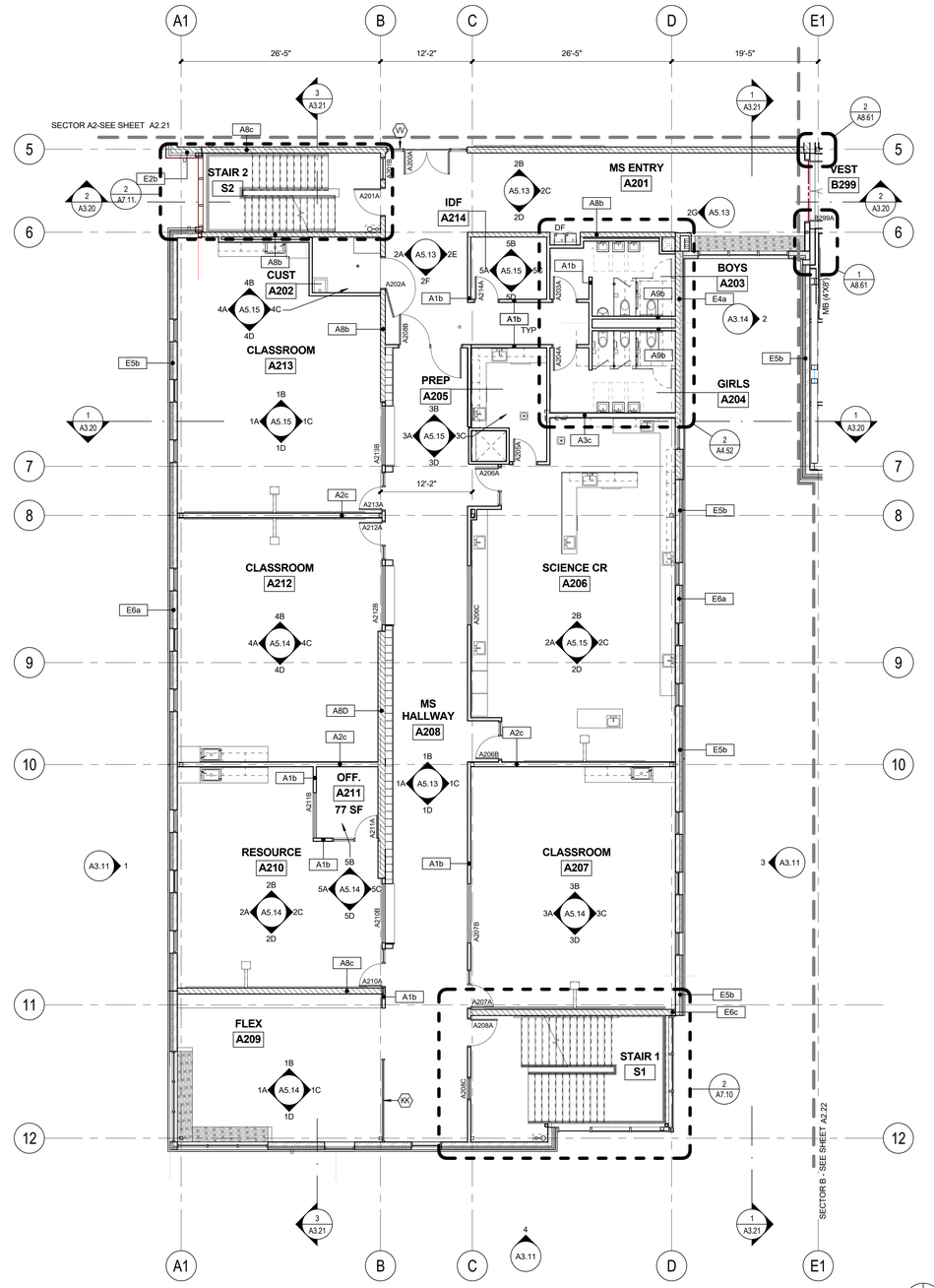

SECOND FLOOR PLAN - SECTOR A1

SCALE: 1/8" = 1'-0"

1

FLOOR PLAN NOTES:

1 DIMENSIONS SHOWN ARE TO FACE OF STUD, FACE OF MASONRY OR CENTERLINE OF COLUMN OR GRID LINE UNLESS NOTED OTHERWISE.

2 DOORS NOT LOCATED BY DIMENSION ARE TO BE CENTERED IN WALLS AS SHOWN OR LOCATED 4 1/2" FROM FACE OF STUD TO FACE OF JAMB.

3 MASONRY DIMENSIONS ARE NOMINAL. COORDINATE ACTUAL ROUGH OPENING MASONRY DIMENSIONS.

4 DIMENSIONS AT RELITES ARE TO CENTER OF ASSEMBLY UNLESS NOTED OTHERWISE.

5 USE DIMENSIONS SHOWN; IN NO CASE SHALL WORKING DIMENSIONS BE SCALED FROM DRAWINGS. CROSS CHECK DETAILS AND DIMENSIONS SHOWN ON THE ARCHITECTURAL DRAWINGS WITH RELATED REQUIREMENTS ON THE STRUCTURAL, MECHANICAL, ELECTRICAL, PLUMBING, AND OTHER DRAWINGS AS APPLICABLE. NOTIFY ARCHITECT OF ANY DISCREPANCIES BEFORE PROCEEDING WITH THE WORK.

6 CONDITIONS AND DETAILS MARKED "TYPICAL" SHALL APPLY IN ALL CASES UNLESS SPECIFICALLY INDICATED OTHERWISE. TYPICAL DETAILS NOT REFERENCED ON DRAWINGS APPLY UNLESS NOTED OTHERWISE BY SPECIFIC NOTES AND DETAILS. WHERE NO SPECIFIC DETAIL IS SHOWN, THE CONSTRUCTION SHALL BE IDENTICAL OR SIMILAR TO THAT INDICATED FOR THE TYPICAL CONSTRUCTION OF THE PROJECT.

7 WHERE NO SPECIFIC STANDARDS ARE APPLIED TO A MATERIAL OR METHOD OF CONSTRUCTION TO BE USED ON THE WORK, ALL SUCH MATERIAL AND METHODS ARE TO MAINTAIN STANDARDS OF THE INDUSTRY AND, WHERE APPLICABLE, MANUFACTURER'S INSTRUCTIONS.

8 LOADING OF CONSTRUCTION MATERIALS SHALL NOT EXCEED THE DESIGN LIVE LOAD PER SQUARE FOOT.

9 ESTABLISH AND VERIFY ALL OPENINGS AND INSERTS FOR ARCHITECTURAL, MECHANICAL, ELECTRICAL, AND PLUMBING WITH APPROPRIATE TRADES, DRAWINGS, AND SUBCONTRACTORS PRIOR TO CONSTRUCTION.

10 PROVIDE ALL NECESSARY ANCHORAGE BLOCKING, BACKING, FRAMING FOR HANDRAILS, DOOR STOPS, CASEWORK, SHELVING, MIRRORS, WALL MOUNTED EQUIPMENT, AND ALL OTHER ITEMS AS REQUIRED FOR COMPLETE INSTALLATION.

11 CONFIRM ALL ROUGH OPENING DIMENSIONS FOR DOORS AND WINDOWS PRIOR TO COMMENCEMENT OF CONSTRUCTION.

12 WHERE A LENGTH OF WALL IS INTERSECTED BY PERPENDICULAR WALLS, WALL TYPE TO BE CONTINUOUS BETWEEN TAGS UNLESS NOTED OTHERWISE.

13 PROVIDE SOLID BLOCKING BETWEEN ROOF JOISTS WHERE WALL RUNS PERPENDICULAR TO ROOF JOISTS. GYPSUM BOARD TO TERMINATE AT ROOF JOISTS.

14 SEE WALL TYPES SHEET(S) FOR DEFLECTION HEAD DETAILS.

15 ROOMS WITHOUT ELEVATIONS TO BE PAINTED GYPSUM BOARD OR GRAFFITI COATING ON EXPOSED CMU BLOCK WALL OR CONCRETE BASED ON WALL TYPE.

16 INTERIOR WALLS TO BE A1b, UNLESS NOTED OTHERWISE.

17 EXTERIOR DOORS AT MEP AREAS AND KITCHEN TO BE HOLLOW METAL, UNLESS NOTED OTHERWISE.

18 STOREFRONT TYPES ON THE INTERIOR ARE NOTED WITH (AA), SEE STOREFRONT TYPES

WALL TYPE NOTES:

A1	WALL CONSTRUCTION TYPE - SEE WALL TYPES
1 HR	FIRE RATED CONSTRUCTION DESIGNATION (IN HOURS)
STC	STC RATING

1 NOTED WALL TYPE DEPICTS TYPICAL WALL CONSTRUCTION. SEE ELEVATIONS, SECTIONS, AND DETAILS FOR ADDITIONAL INFORMATION.

2 PROVIDE MOISTURE RESISTANT GYPSUM BOARD IN ALL TOILET ROOMS. PROVIDE TILE BACKER BOARD BEHIND ALL CERAMIC TILE APPLICATIONS. MOISTURE RESISTANT GYPSUM BOARD SHALL ALSO BE USED AT ALL KITCHEN AREAS AND BEHIND DRINKING FOUNTAINS.

3 SEE INTERIOR ELEVATIONS FOR LOCATIONS AND EXTENTS OF APPLIED WALL FINISHES

4 WHERE A LENGTH OF WALL IS INTERSECTED BY PERPENDICULAR WALLS, WALL TYPE TO BE CONTINUOUS BETWEEN TAGS UNLESS OTHERWISE NOTED.

KEYNOTES

A1.12 VOLLEYBALL EMBEDS
A2.33 GYM DIVIDER CURTAIN
A3.68 SCREEN WALLS. +/- 4'X8' CUSTOM PERFERATED STEEL PANELS. SEE 5-7/A8.40
DF

6/15/2018 5:23:53 PM
C:\BRIC Projects\17007 SSD-MSHS_christie.sterne.rvt

BRIC ARCHITECTURE, INC.
1233 NW NORTHRUP STREET, SUITE 100
PORTLAND, OR 97209 T 503.595.4900

New Middle School / High School
Seaside School District
1801 S. FRANKLIN STREET, SEASIDE, OR 97138
t: 503-738-5591

NOT FOR CONSTRUCTION

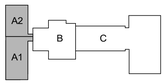

key plan

phase	BP2 PERMIT SET
date	6/15/2018
revisions	
project #	17007

FLOOR PLAN LEVEL 2 - SECTOR A1+A2

A2.21

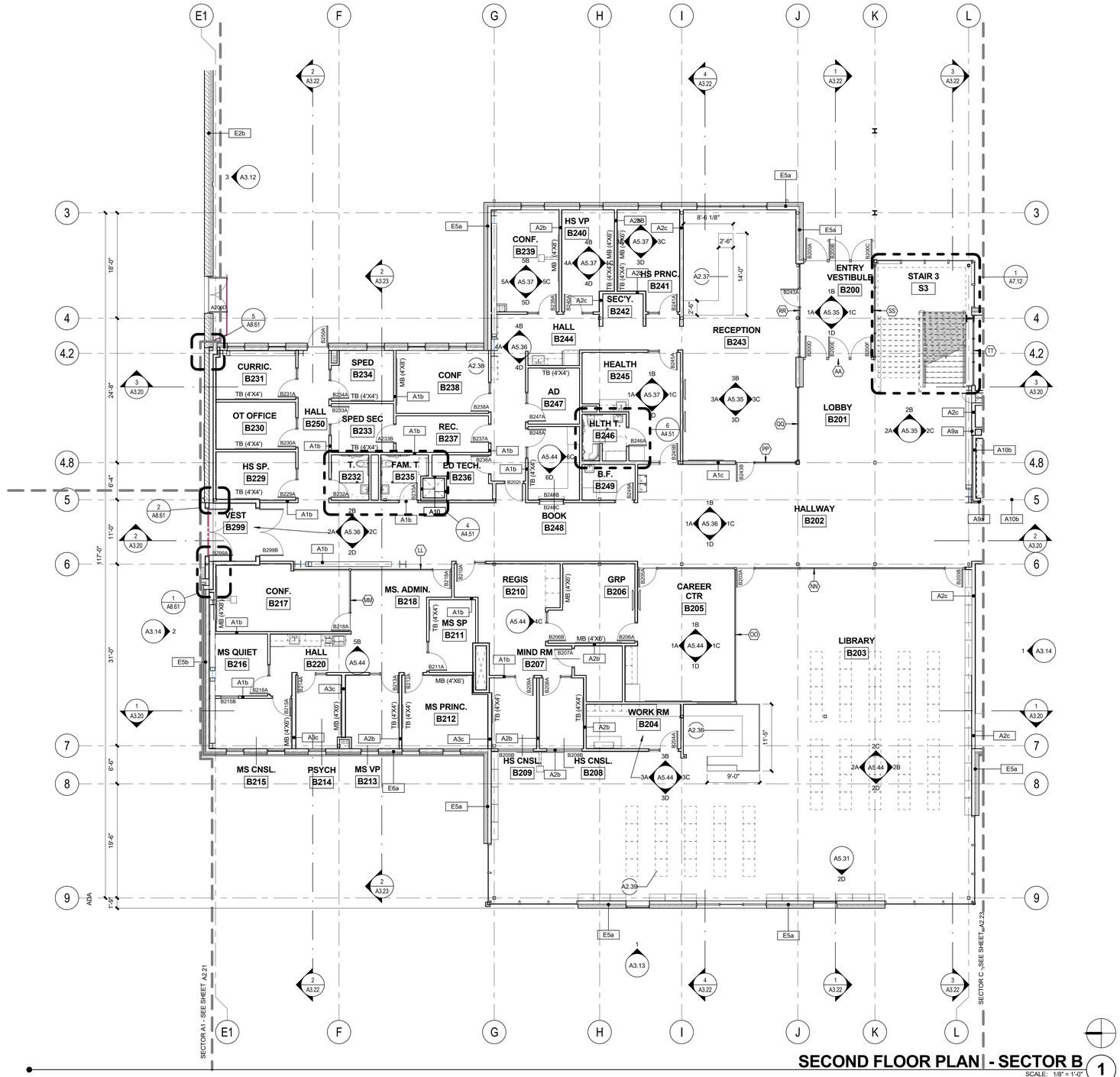

SECOND FLOOR PLAN - SECTOR B

SCALE: 1/8" = 1'-0"

FLOOR PLAN NOTES:

1. DIMENSIONS SHOWN ARE TO FACE OF STUD, FACE OF MASONRY OR CENTERLINE OF COLUMN OR GRID LINE UNLESS NOTED OTHERWISE.
2. DOORS NOT LOCATED BY DIMENSION ARE TO BE CENTERED IN WALLS AS SHOWN OR LOCATED 4 1/2" FROM FACE OF STUD TO FACE OF JAMB.
3. MASONRY DIMENSIONS ARE NOMINAL. COORDINATE ACTUAL ROUGH OPENING MASONRY DIMENSIONS.
4. DIMENSIONS AT RELITES ARE TO CENTER OF ASSEMBLY UNLESS NOTED OTHERWISE.
5. USE DIMENSIONS SHOWN; IN NO CASE SHALL WORKING DIMENSIONS BE SCALED FROM DRAWINGS. CROSS CHECK DETAILS AND DIMENSIONS SHOWN ON THE ARCHITECTURAL DRAWINGS WITH RELATED REQUIREMENTS ON THE STRUCTURAL, MECHANICAL, ELECTRICAL, PLUMBING, AND OTHER DRAWINGS AS APPLICABLE. NOTIFY ARCHITECT OF ANY DISCREPANCIES BEFORE PROCEEDING WITH THE WORK.
6. CONDITIONS AND DETAILS MARKED "TYPICAL" SHALL APPLY IN ALL CASES UNLESS SPECIFICALLY INDICATED OTHERWISE. TYPICAL DETAILS NOT REFERENCED ON DRAWINGS APPLY UNLESS NOTED OTHERWISE BY SPECIFIC NOTES AND DETAILS. WHERE NO SPECIFIC DETAIL IS SHOWN, THE CONSTRUCTION SHALL BE IDENTICAL OR SIMILAR TO THAT INDICATED FOR THE TYPICAL CONSTRUCTION OF THE PROJECT.
7. WHERE NO SPECIFIC STANDARDS ARE APPLIED TO A MATERIAL OR METHOD OF CONSTRUCTION TO BE USED ON THE WORK, ALL SUCH MATERIAL AND METHODS ARE TO MAINTAIN STANDARDS OF THE INDUSTRY AND, WHERE APPLICABLE, MANUFACTURER'S INSTRUCTIONS.
8. LOADING OF CONSTRUCTION MATERIALS SHALL NOT EXCEED THE DESIGN LIVE LOAD PER SQUARE FOOT.
9. ESTABLISH AND VERIFY ALL OPENINGS AND INSERTS FOR ARCHITECTURAL, MECHANICAL, ELECTRICAL, AND PLUMBING WITH APPROPRIATE TRADES, DRAWINGS, AND SUBCONTRACTORS PRIOR TO CONSTRUCTION.
10. PROVIDE ALL NECESSARY ANCHORAGE BLOCKING, BACKING, FRAMING FOR HANDRAILS, DOOR STOPS, CASEWORK, SHELVING, MIRRORS, WALL MOUNTED EQUIPMENT, AND ALL OTHER ITEMS AS REQUIRED FOR COMPLETE INSTALLATION.
11. CONFIRM ALL ROUGH OPENING DIMENSIONS FOR DOORS AND WINDOWS PRIOR TO COMMENCEMENT OF CONSTRUCTION.
12. WHERE A LENGTH OF WALL IS INTERSECTED BY PERPENDICULAR WALLS, WALL TYPE TO BE CONTINUOUS BETWEEN TAGS UNLESS NOTED OTHERWISE.
13. PROVIDE SOLID BLOCKING BETWEEN ROOF JOISTS WHERE WALL RUNS PERPENDICULAR TO ROOF JOISTS. GYPSUM BOARD TO TERMINATE AT ROOF JOISTS.
14. SEE WALL TYPES SHEET(S) FOR DEFLECTION HEAD DETAILS.
15. ROOMS WITHOUT ELEVATIONS TO BE PAINTED GYPSUM BOARD OR GRAFFITI COATING ON EXPOSED CMU BLOCK WALL OR CONCRETE BASED ON WALL TYPE.
16. INTERIOR WALLS TO BE A1b, UNLESS NOTED OTHERWISE.
17. EXTERIOR DOORS AT MEP AREAS AND KITCHEN TO BE HOLLOW METAL, UNLESS NOTED OTHERWISE.
18. STOREFRONT TYPES ON THE INTERIOR ARE NOTED WITH (AA), SEE STOREFRONT TYPES

WALL TYPE NOTES:

A1	WALL CONSTRUCTION TYPE - SEE WALL TYPES
1 HR	FIRE RATED CONSTRUCTION DESIGNATION (IN HOURS)
STC	STC RATING

1. NOTED WALL TYPE DEPICTS TYPICAL WALL CONSTRUCTION. SEE ELEVATIONS, SECTIONS, AND DETAILS FOR ADDITIONAL INFORMATION.
2. PROVIDE MOISTURE RESISTANT GYPSUM BOARD IN ALL TOILET ROOMS. PROVIDE TILE BACKER BOARD BEHIND ALL CERAMIC TILE APPLICATIONS. MOISTURE RESISTANT GYPSUM BOARD SHALL ALSO BE USED AT ALL KITCHEN AREAS AND BEHIND DRINKING FOUNTAINS.
3. SEE INTERIOR ELEVATIONS FOR LOCATIONS AND EXTENTS OF APPLIED WALL FINISHES.
4. WHERE A LENGTH OF WALL IS INTERSECTED BY PERPENDICULAR WALLS, WALL TYPE TO BE CONTINUOUS BETWEEN TAGS UNLESS OTHERWISE NOTED.

KEYNOTES

A2.36 CIRCULATION DESK (P-LAM WITH ACCENT PANEL (TBD); P-LAM CABS BELOW

A2.37 RECEPTION DESK - ALL SURFACES PLASTIC LAMINATE (DRAWERS, CABS BELOW); ASSUME WOOD COUNTERTOP

A2.38 FOR OFFICES NOT ELEVATED, ASSUME WS-1 ON EXTERIOR WINDOWS AND WS-2 ON INTERIOR RELITES WHERE OCCURS, TYP.

A2.39 DOUBLE SIDED MOBILE BOOK SHELVES (TOTAL OF 42)

BR|IC ARCHITECTURE, INC.
1233 NW NORTHRUP STREET, SUITE 100
PORTLAND, OR 97209 T 503.595.4900

New Middle School / High School
Seaside School District
1801 S. FRANKLIN STREET, SEASIDE, OR 97138
t: 503-738-5591

NOT FOR CONSTRUCTION

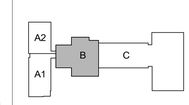

key plan

phase	BP2 PERMIT SET
date	6/15/2018
revisions	
project #	17007

FLOOR PLAN LEVEL 2 - SECTOR B

A2.22

6/15/2018 5:23:56 PM
C:\BRIC Projects\17007 SSD-MSHS_christie.sterne.rvt

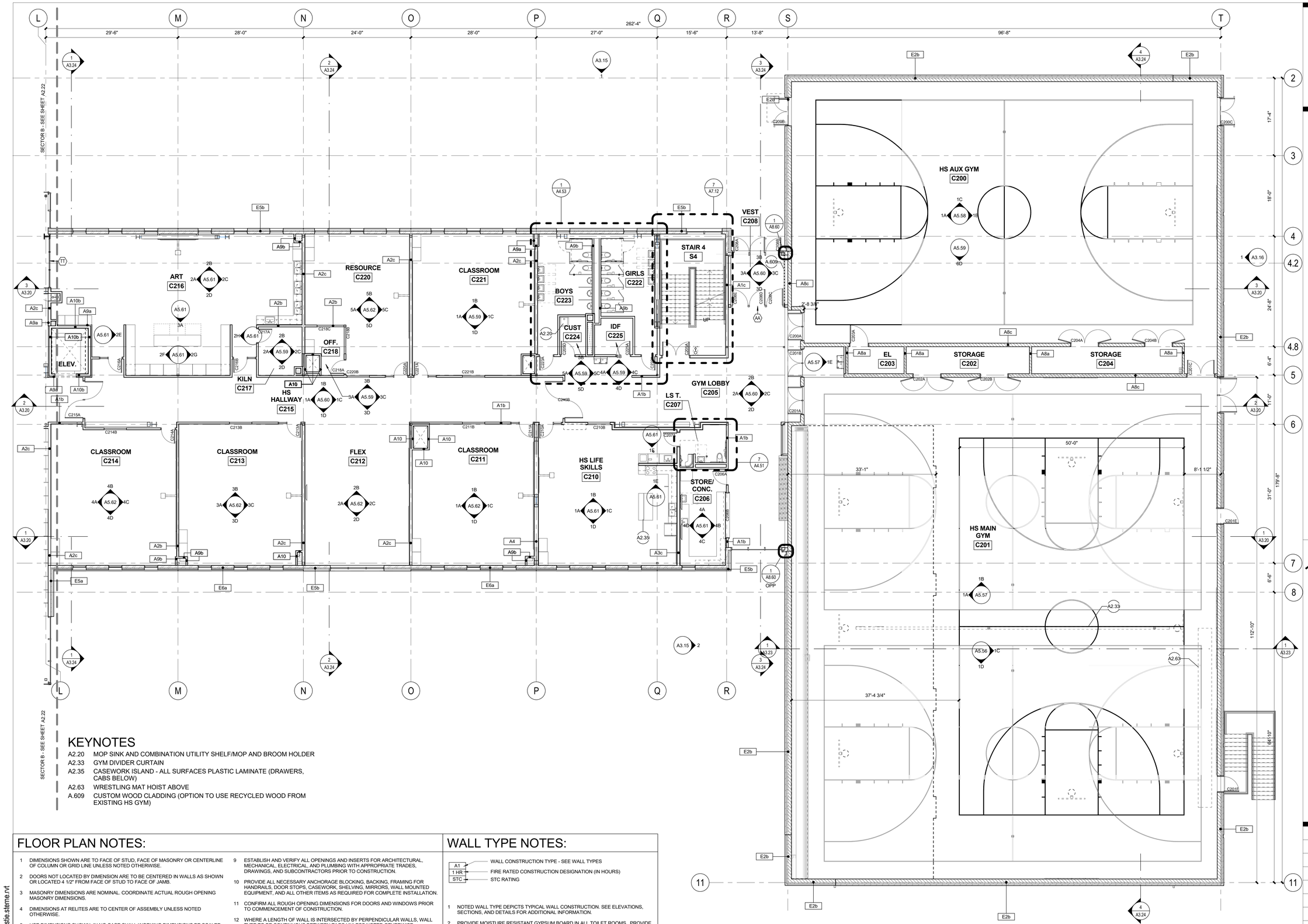

KEYNOTES

A2.20 MOP SINK AND COMBINATION UTILITY SHELF/MOP AND BROOM HOLDER

A2.33 GYM DIVIDER CURTAIN

A2.35 CASEWORK ISLAND - ALL SURFACES PLASTIC LAMINATE (DRAWERS, CABS BELOW)

A2.63 WRESTLING MAT HOIST ABOVE

A.609 CUSTOM WOOD CLADDING (OPTION TO USE RECYCLED WOOD FROM EXISTING HS GYM)

FLOOR PLAN NOTES:

1. DIMENSIONS SHOWN ARE TO FACE OF STUD, FACE OF MASONRY OR CENTERLINE OF COLUMN OR GRID LINE UNLESS NOTED OTHERWISE.
2. DOORS NOT LOCATED BY DIMENSION ARE TO BE CENTERED IN WALLS AS SHOWN OR LOCATED 4 1/2" FROM FACE OF STUD TO FACE OF JAMB.
3. MASONRY DIMENSIONS ARE NOMINAL. COORDINATE ACTUAL ROUGH OPENING MASONRY DIMENSIONS.
4. DIMENSIONS AT RELITES ARE TO CENTER OF ASSEMBLY UNLESS NOTED OTHERWISE.
5. USE DIMENSIONS SHOWN; IN NO CASE SHALL WORKING DIMENSIONS BE SCALED FROM DRAWINGS. CROSS CHECK DETAILS AND DIMENSIONS SHOWN ON THE ARCHITECTURAL DRAWINGS WITH RELATED REQUIREMENTS ON THE STRUCTURAL, MECHANICAL, ELECTRICAL, PLUMBING, AND OTHER DRAWINGS AS APPLICABLE. NOTIFY ARCHITECT OF ANY DISCREPANCIES BEFORE PROCEEDING WITH THE WORK.
6. CONDITIONS AND DETAILS MARKED "TYPICAL" SHALL APPLY IN ALL CASES UNLESS SPECIFICALLY INDICATED OTHERWISE. TYPICAL DETAILS NOT REFERENCED ON DRAWINGS APPLY UNLESS NOTED OTHERWISE BY SPECIFIC NOTES AND DETAILS. WHERE NO SPECIFIC DETAIL IS SHOWN, THE CONSTRUCTION SHALL BE IDENTICAL OR SIMILAR TO THAT INDICATED FOR THE TYPICAL CONSTRUCTION OF THE PROJECT.
7. WHERE NO SPECIFIC STANDARDS ARE APPLIED TO A MATERIAL OR METHOD OF CONSTRUCTION TO BE USED ON THE WORK, ALL SUCH MATERIAL AND METHODS ARE TO MAINTAIN STANDARDS OF THE INDUSTRY AND, WHERE APPLICABLE, MANUFACTURER'S INSTRUCTIONS.
8. LOADING OF CONSTRUCTION MATERIALS SHALL NOT EXCEED THE DESIGN LIVE LOAD PER SQUARE FOOT.
9. ESTABLISH AND VERIFY ALL OPENINGS AND INSERTS FOR ARCHITECTURAL, MECHANICAL, ELECTRICAL, AND PLUMBING WITH APPROPRIATE TRADES, DRAWINGS, AND SUBCONTRACTORS PRIOR TO CONSTRUCTION.
10. PROVIDE ALL NECESSARY ANCHORAGE BLOCKING, BACKING, FRAMING FOR HANDRAILS, DOOR STOPS, CASEWORK, SHELVING, MIRRORS, WALL MOUNTED EQUIPMENT, AND ALL OTHER ITEMS AS REQUIRED FOR COMPLETE INSTALLATION.
11. CONFIRM ALL ROUGH OPENING DIMENSIONS FOR DOORS AND WINDOWS PRIOR TO COMMENCEMENT OF CONSTRUCTION.
12. WHERE A LENGTH OF WALL IS INTERSECTED BY PERPENDICULAR WALLS, WALL TYPE TO BE CONTINUOUS BETWEEN TAGS UNLESS NOTED OTHERWISE.
13. PROVIDE SOLID BLOCKING BETWEEN ROOF JOISTS WHERE WALL RUNS PERPENDICULAR TO ROOF JOISTS. GYPSUM BOARD TO TERMINATE AT ROOF JOISTS.
14. SEE WALL TYPES SHEET(S) FOR DEFLECTION HEAD DETAILS.
15. ROOMS WITHOUT ELEVATIONS TO BE PAINTED GYPSUM BOARD OR GRAFFITI COATING ON EXPOSED CMU BLOCK WALL OR CONCRETE BASED ON WALL TYPE.
16. INTERIOR WALLS TO BE A1b, UNLESS NOTED OTHERWISE.
17. EXTERIOR DOORS AT MEP AREAS AND KITCHEN TO BE HOLLOW METAL, UNLESS NOTED OTHERWISE.
18. STOREFRONT TYPES ON THE INTERIOR ARE NOTED WITH (AA), SEE STOREFRONT TYPES

WALL TYPE NOTES:

A1 — WALL CONSTRUCTION TYPE - SEE WALL TYPES
1 HR — FIRE RATED CONSTRUCTION DESIGNATION (IN HOURS)
STC — STC RATING

1. NOTED WALL TYPE DEPICTS TYPICAL WALL CONSTRUCTION. SEE ELEVATIONS, SECTIONS, AND DETAILS FOR ADDITIONAL INFORMATION.
2. PROVIDE MOISTURE RESISTANT GYPSUM BOARD IN ALL TOILET ROOMS. PROVIDE TILE BACKER BOARD BEHIND ALL CERAMIC TILE APPLICATIONS. MOISTURE RESISTANT GYPSUM BOARD SHALL ALSO BE USED AT ALL KITCHEN AREAS AND BEHIND DRINKING FOUNTAINS.
3. SEE INTERIOR ELEVATIONS FOR LOCATIONS AND EXTENTS OF APPLIED WALL FINISHES.
4. WHERE A LENGTH OF WALL IS INTERSECTED BY PERPENDICULAR WALLS, WALL TYPE TO BE CONTINUOUS BETWEEN TAGS UNLESS OTHERWISE NOTED.

SECOND FLOOR PLAN - SECTOR C

SCALE: 1/8" = 1'-0"

6/15/2018 5:24:04 PM
C:\BRIC Projects\17007 SSD-MSHS_christie.sterne.rvt

BRIC ARCHITECTURE, INC.
1233 NW NORTHRUP STREET, SUITE 100
PORTLAND, OR 97209 T 503.595.4900

New Middle School / High School
Seaside School District
1801 S. FRANKLIN STREET, SEASIDE, OR 97138
t: 503-738-5591

NOT FOR CONSTRUCTION

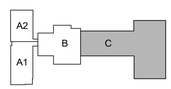

key plan

phase	BP2 PERMIT SET
date	6/15/2018
revisions	
project #	17007

FLOOR PLAN LEVEL 2 - SECTOR C

A2.23

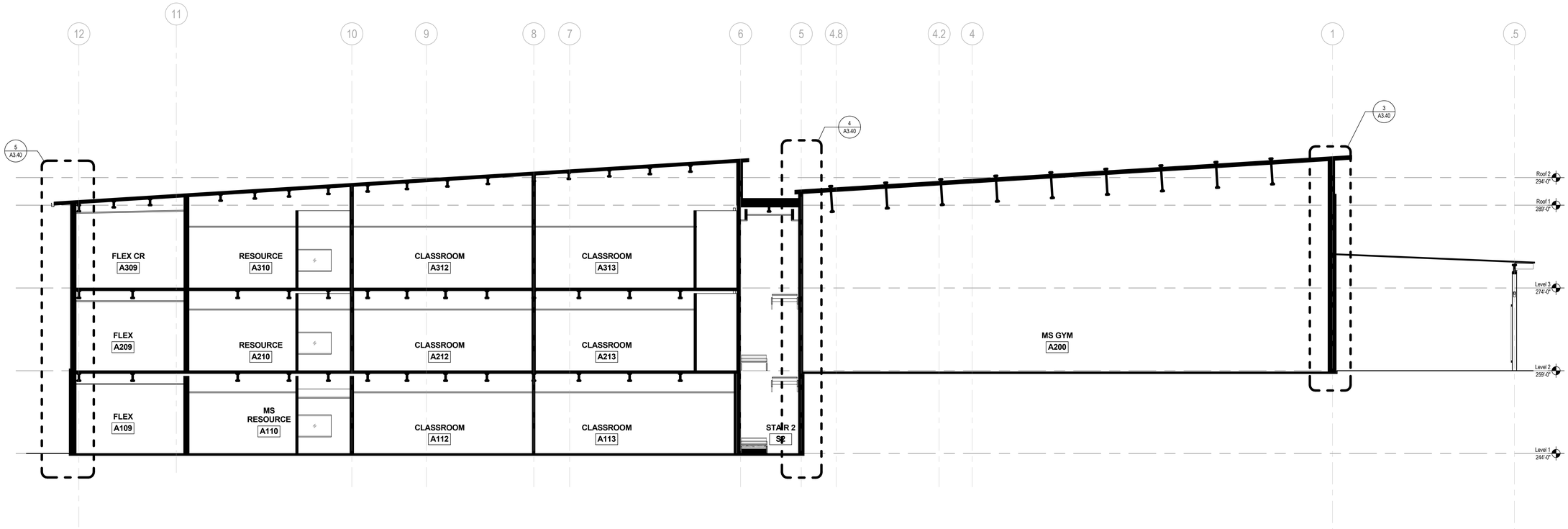

BUILDING SECTION - SECTOR A

SCALE: 1/8" = 1'-0"

3

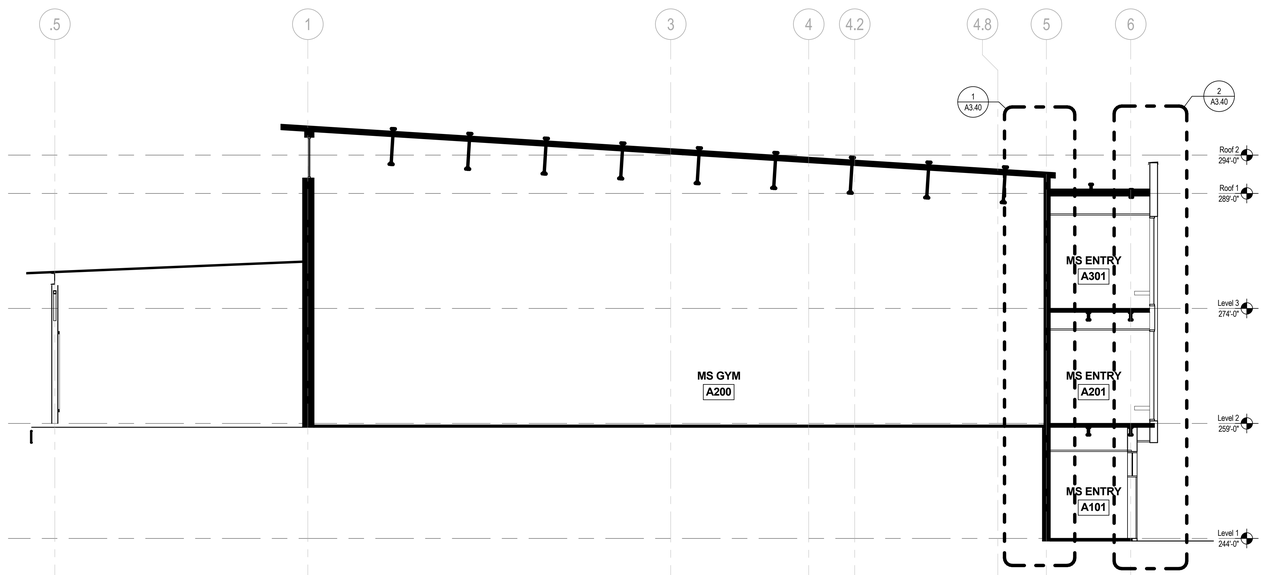

BUILDING SECTION - SECTOR A

SCALE: 1/8" = 1'-0"

1

BR|IC
ARCHITECTURE, INC.
1233 NW NORTHRUP STREET, SUITE 100
PORTLAND, OR 97209 T 503.595.4900

New Middle School / High School

Seaside School District

1801 S. FRANKLIN STREET, SEASIDE, OR 97138
t: 503-738-5591

NOT FOR CONSTRUCTION

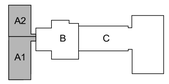

key plan

phase	BP2 PERMIT SET
date	6/15/2018
revisions	
project #	17007

BUILDING SECTIONS - SECTOR A

A3.21

6/15/2018 5:24:07 PM
C:\BRIC Projects\17007 SSD-MSHS_christie.sterne.rvt

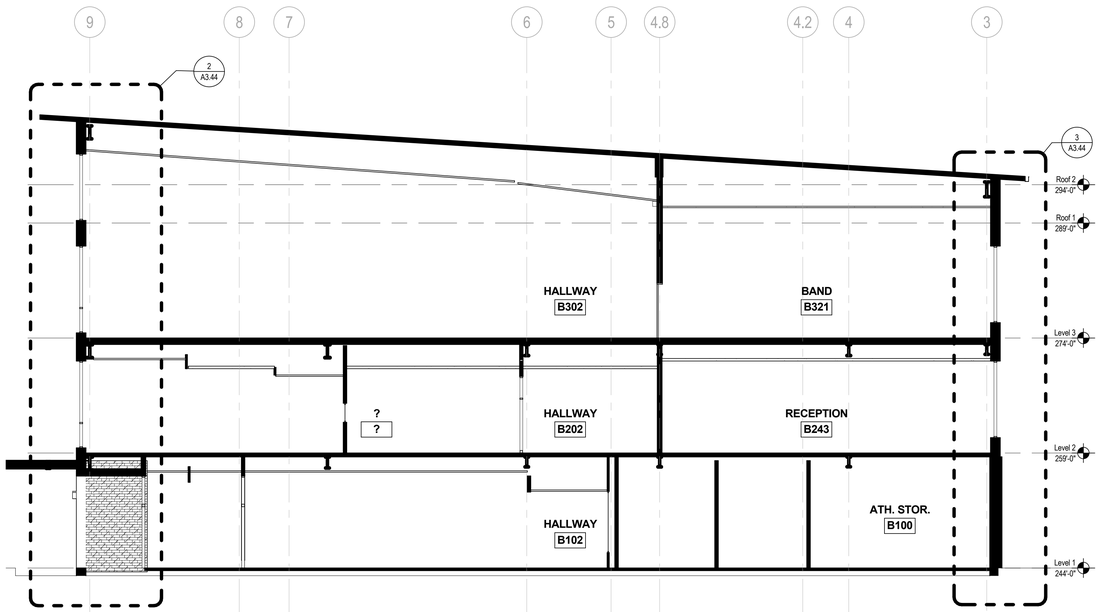

BUILDING SECTION - SECTOR B 4
SCALE: 1/8" = 1'-0"

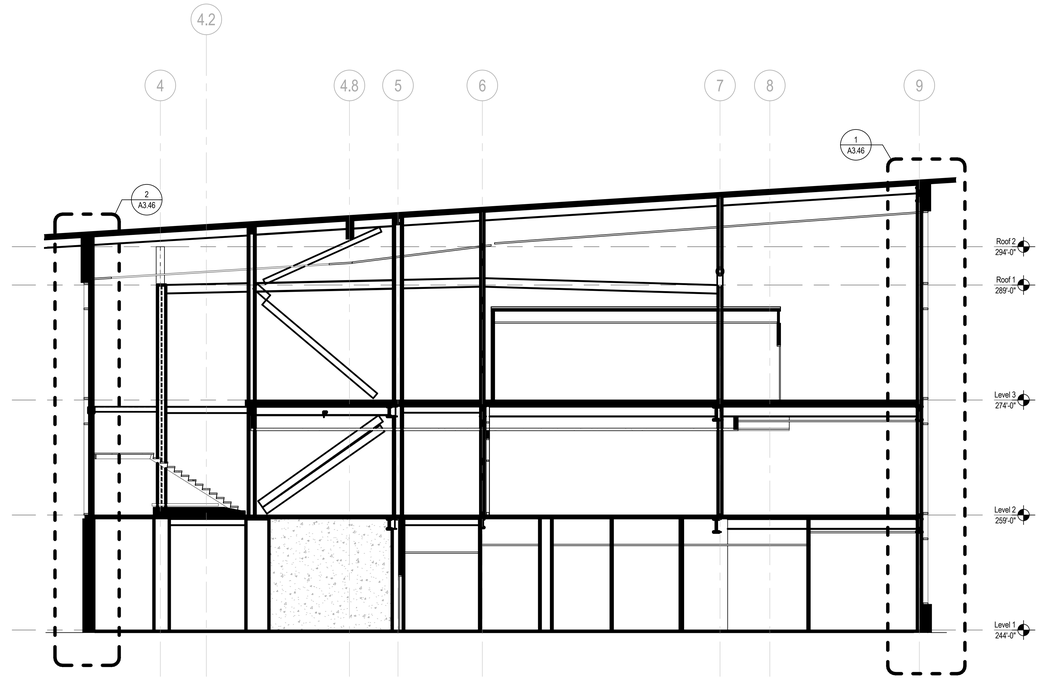

BUILDING SECTION - SECTOR B 3
SCALE: 1/8" = 1'-0"

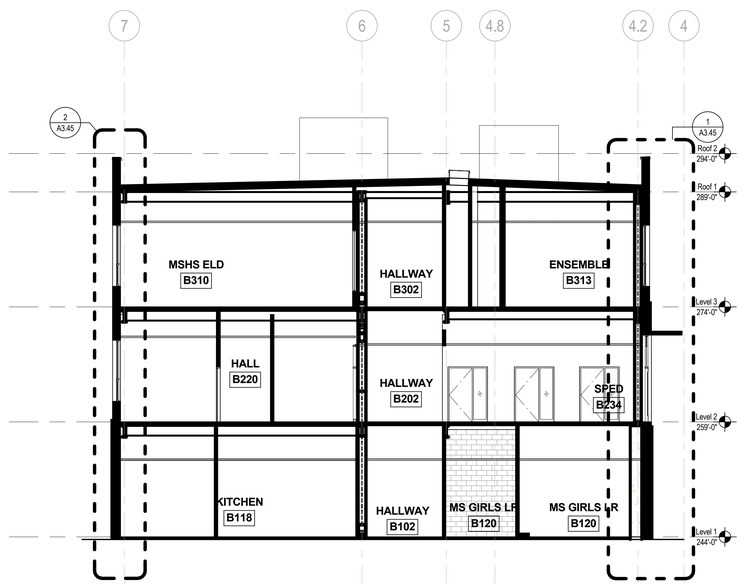

BUILDING SECTION - SECTOR B 2
SCALE: 1/8" = 1'-0"

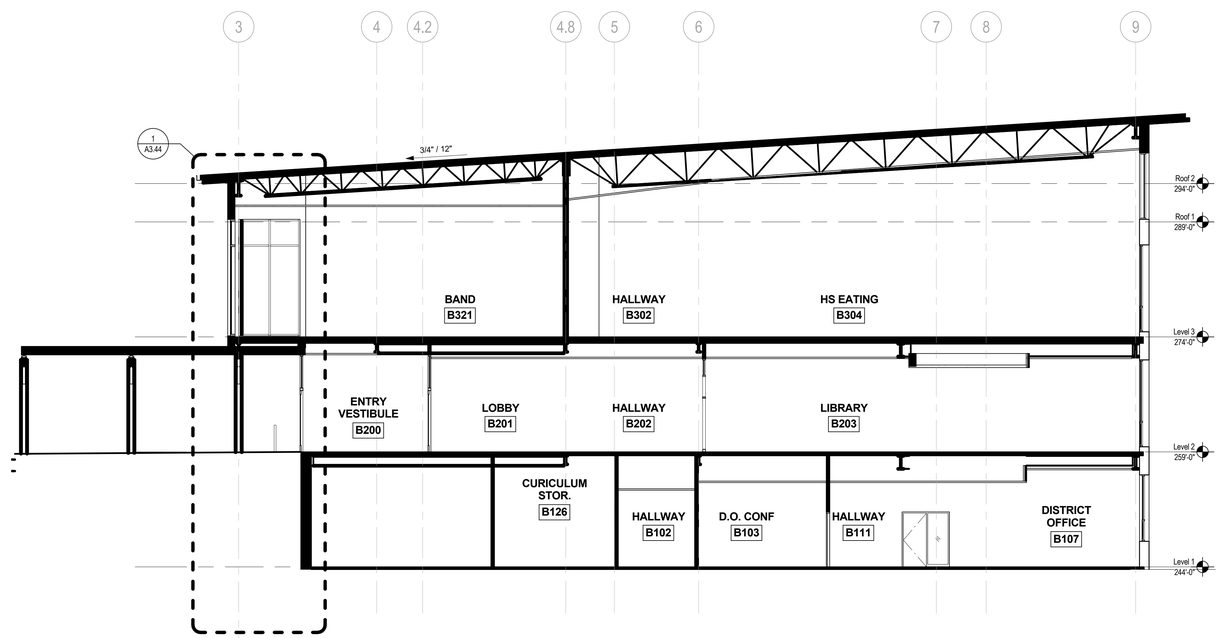

BUILDING SECTION - SECTOR B 1
SCALE: 1/8" = 1'-0"

BR|IC
ARCHITECTURE, INC.
1233 NW NORTHRUP STREET, SUITE 100
PORTLAND, OR 97209 T 503.595.4900

New Middle School / High School
Seaside School District
1801 S. FRANKLIN STREET, SEASIDE, OR 97138
t: 503-738-5591

NOT FOR CONSTRUCTION

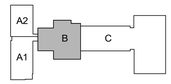

key plan

phase	BP2 PERMIT SET
date	6/15/2018
revisions	
project #	17007

BUILDING SECTIONS - SECTOR B

A3.22

6/15/2018 5:24:10 PM
C:\BRIC Projects\17007 SSD-MSHS_christie.sterne.rvt

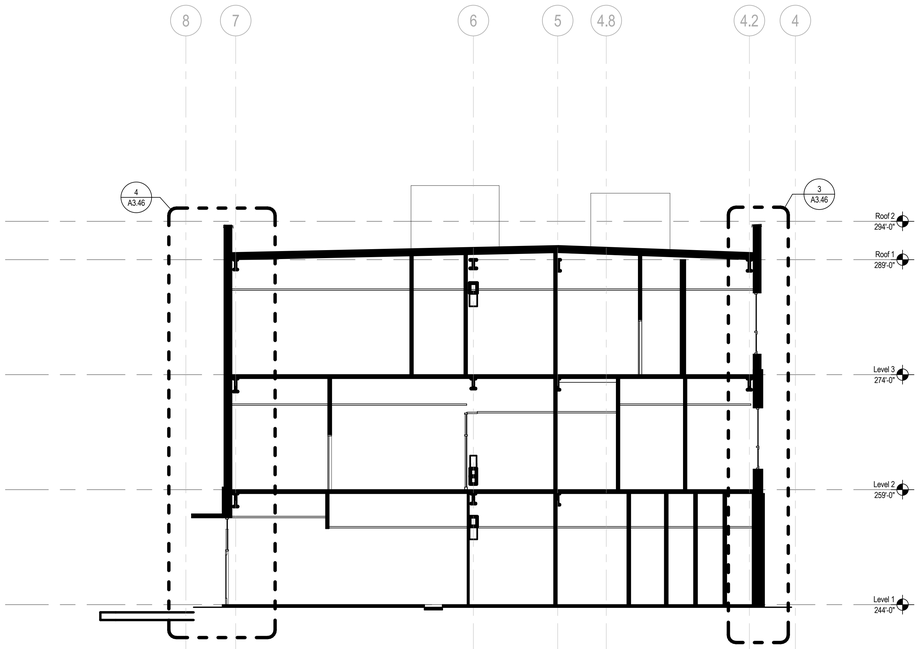

BUILDING SECTION - SECTOR B (2)

SCALE: 1/8" = 1'-0"

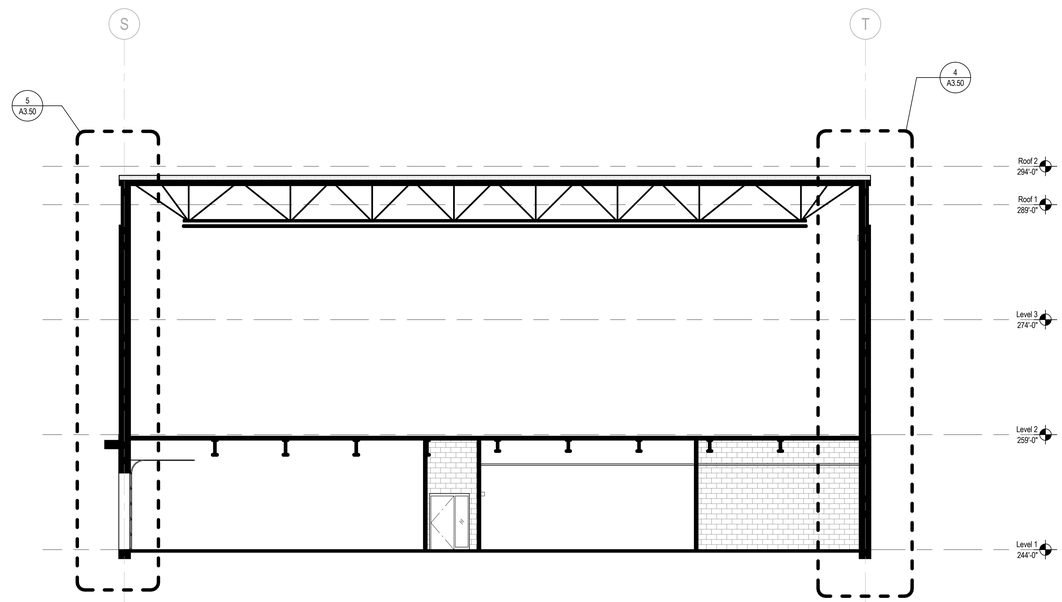

BUILDING SECTION - SECTOR C (1)

SCALE: 1/8" = 1'-0"

6/15/2018 5:24:12 PM
C:\BRIC Projects\17007 SSD-MSHS_christie.sterne.rvt

BRIC
ARCHITECTURE, INC.
1233 NW NORTHRUP STREET, SUITE 100
PORTLAND, OR 97209 T 503.595.4900

New Middle School / High School

Seaside School District

1801 S. FRANKLIN STREET, SEASIDE, OR 97138
t: 503-738-5591

NOT FOR CONSTRUCTION

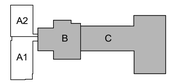

key plan

phase	BP2 PERMIT SET
date	6/15/2018
revisions	
project #	17007

BUILDING SECTIONS - SECTORS B & C

A3.23

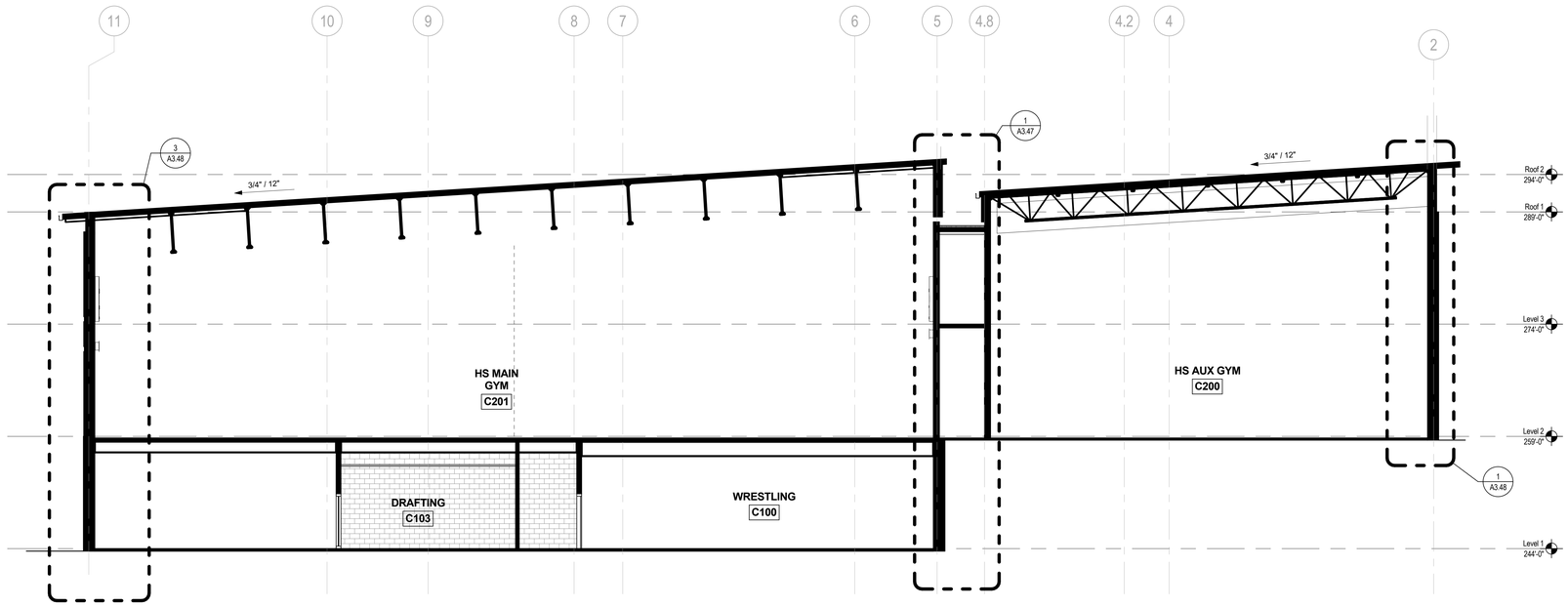

BUILDING SECTION - SECTOR C (4)

SCALE: 1/8" = 1'-0"

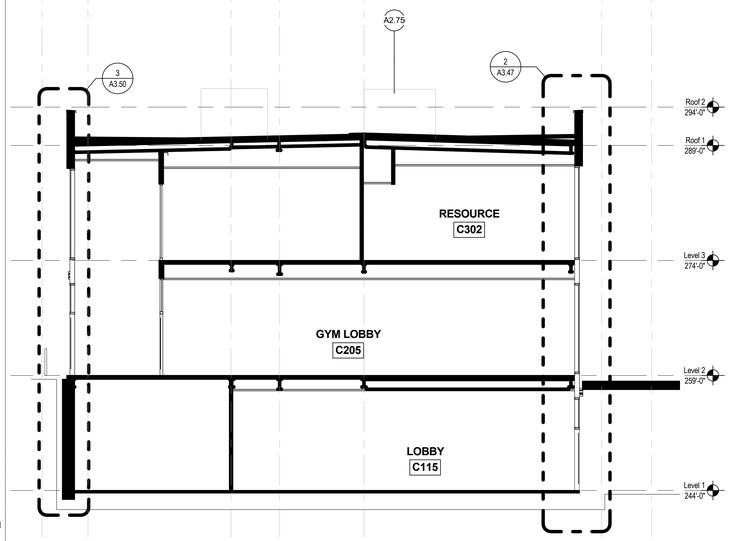

BUILDING SECTION - SECTOR C (3)

SCALE: 1/8" = 1'-0"

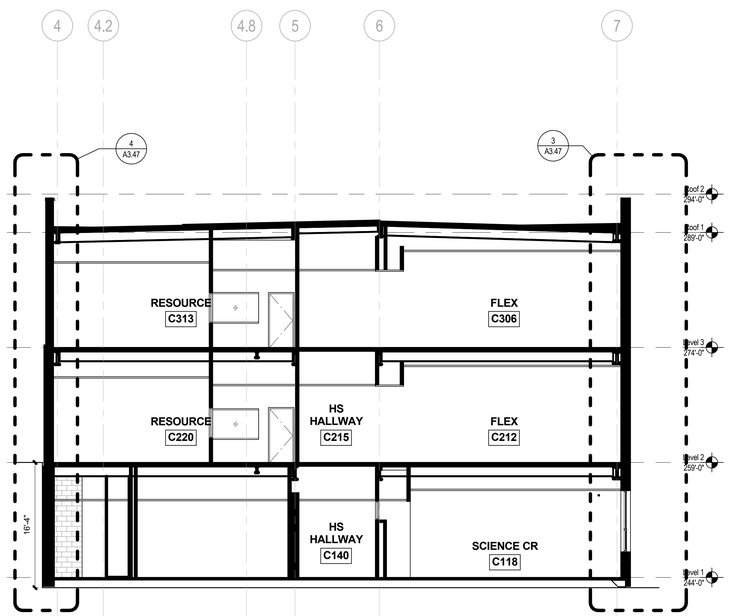

BUILDING SECTION - SECTOR C (2)

SCALE: 1/8" = 1'-0"

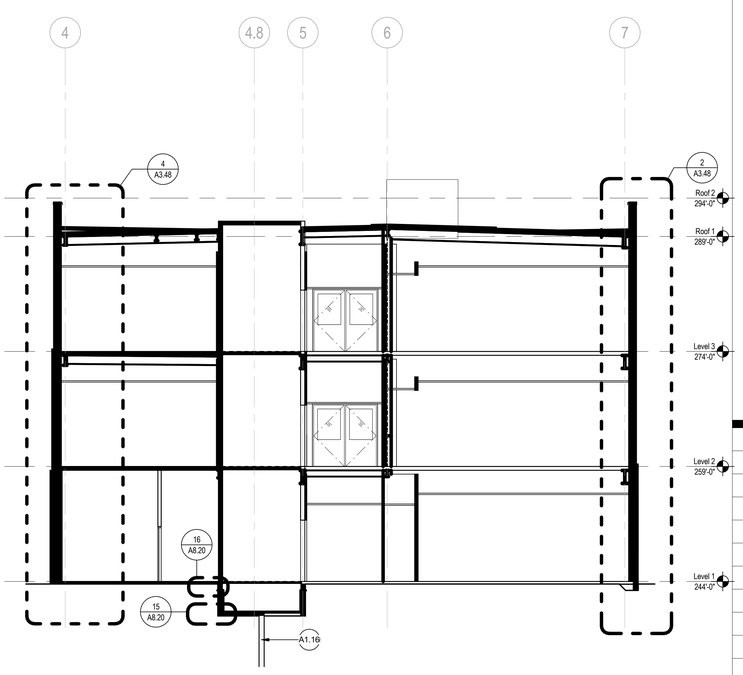

BUILDING SECTION - SECTOR C (1)

SCALE: 1/8" = 1'-0"

6/15/2018 5:24:15 PM
C:\BRIC Projects\17007 SSD-MSHS_christie.sterne.rvt

BR|IC
ARCHITECTURE, INC.
1233 NW NORTHRUP STREET, SUITE 100
PORTLAND, OR 97209 T 503.595.4900

New Middle School / High School

Seaside School District

1801 S. FRANKLIN STREET, SEASIDE, OR 97138
t: 503-738-5591

NOT FOR CONSTRUCTION

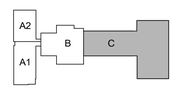

key plan

phase	BP2 PERMIT SET
date	6/15/2018
revisions	
project #	17007

BUILDING SECTIONS - SECTOR C

A3.24

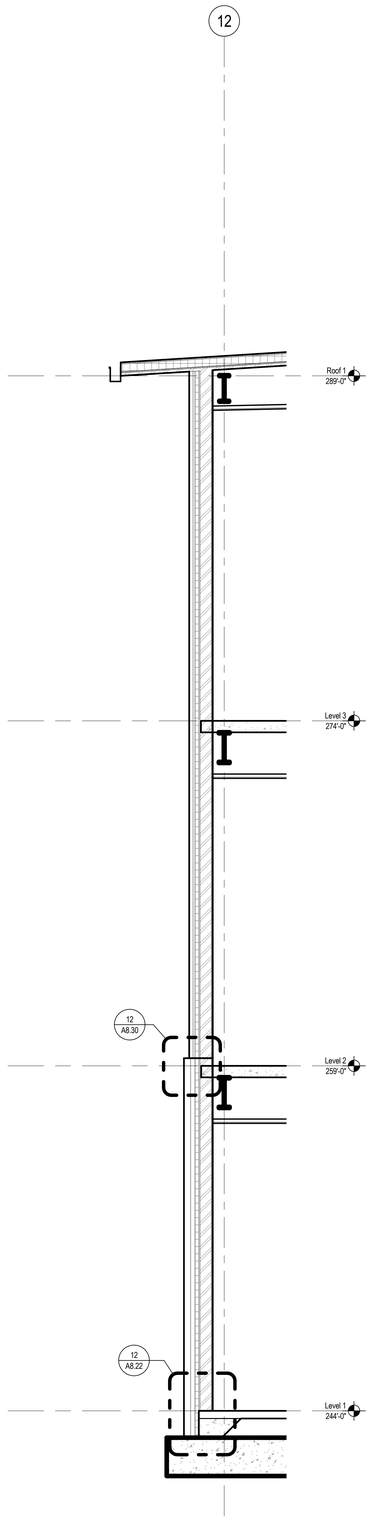

WALL SECTION - SECTOR A (5)
SCALE: 3/8" = 1'-0"

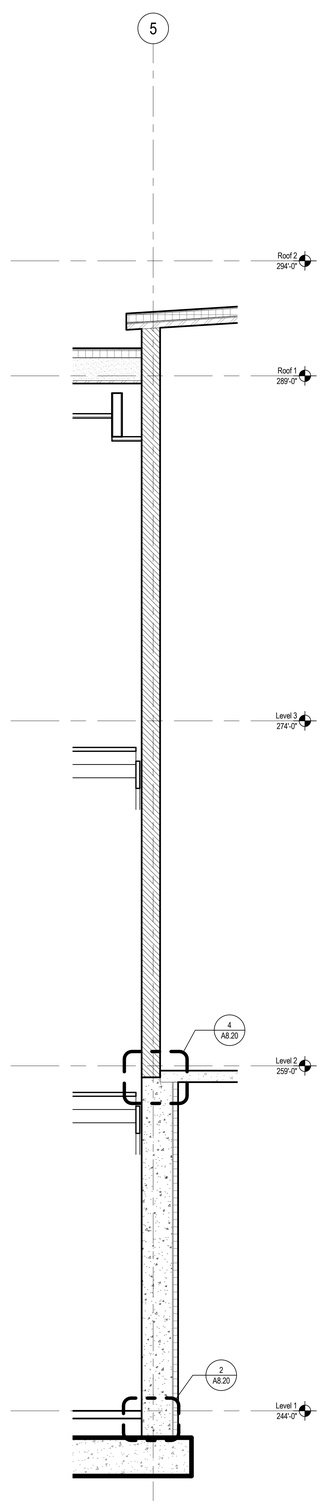

WALL SECTION - SECTOR A (4)
SCALE: 3/8" = 1'-0"

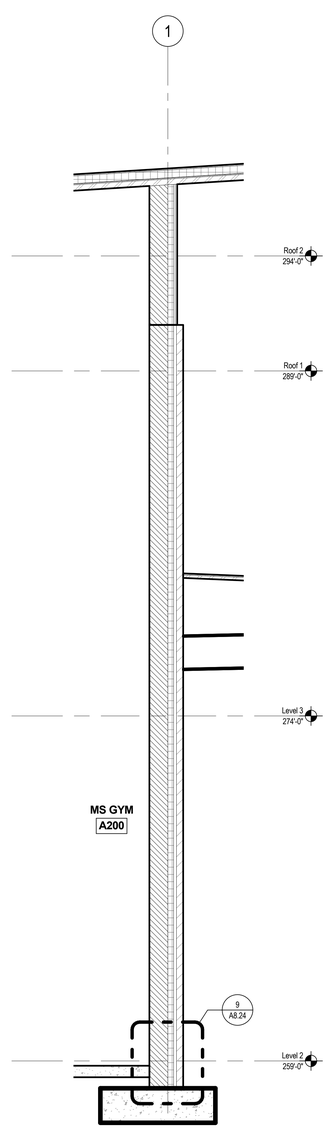

WALL SECTION - SECTOR A (3)
SCALE: 3/8" = 1'-0"

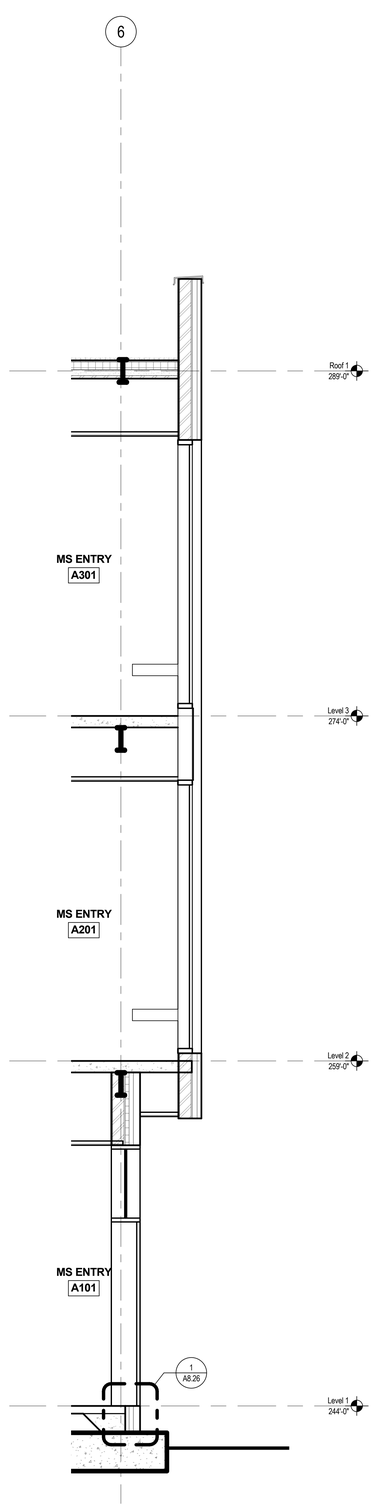

WALL SECTION - SECTOR A (2)
SCALE: 3/8" = 1'-0"

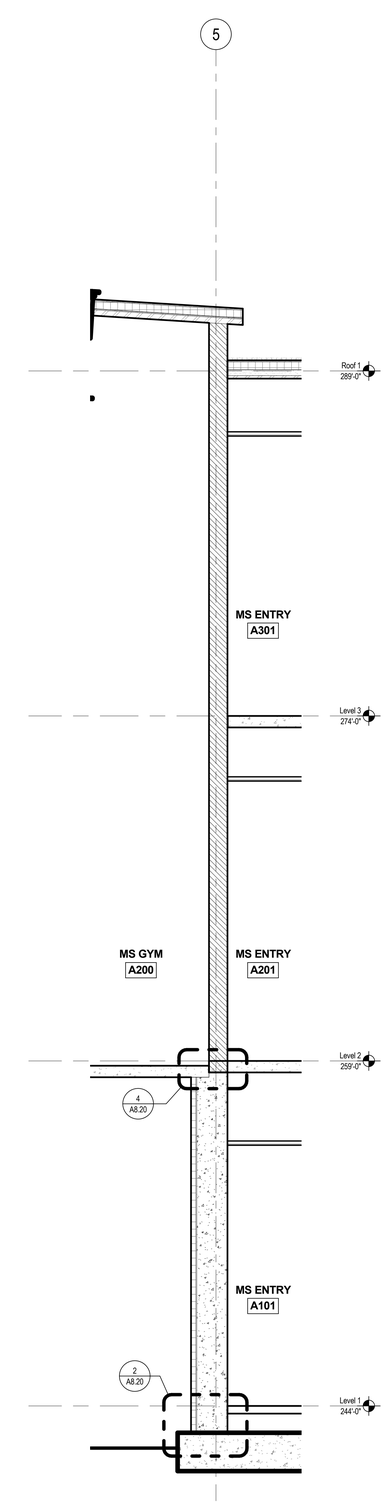

WALL SECTION - SECTOR A (1)
SCALE: 3/8" = 1'-0"

BR|IC
ARCHITECTURE, INC.
1233 NW NORTHRUP STREET, SUITE 100
PORTLAND, OR 97209 T 503.595.4900

New Middle School / High School
Seaside School District
1801 S. FRANKLIN STREET, SEASIDE, OR 97138
t: 503-738-5591

NOT FOR CONSTRUCTION

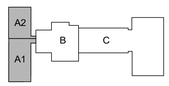

k e y p l a n

phase	BP2 PERMIT SET
date	6/15/2018
revisions	
project #	17007

WALL SECTIONS - SECTOR A

A3.40

6/15/2018 5:24:19 PM
C:\BRIC Projects\17007 SSD-MSHS_christie.sterne.rvt

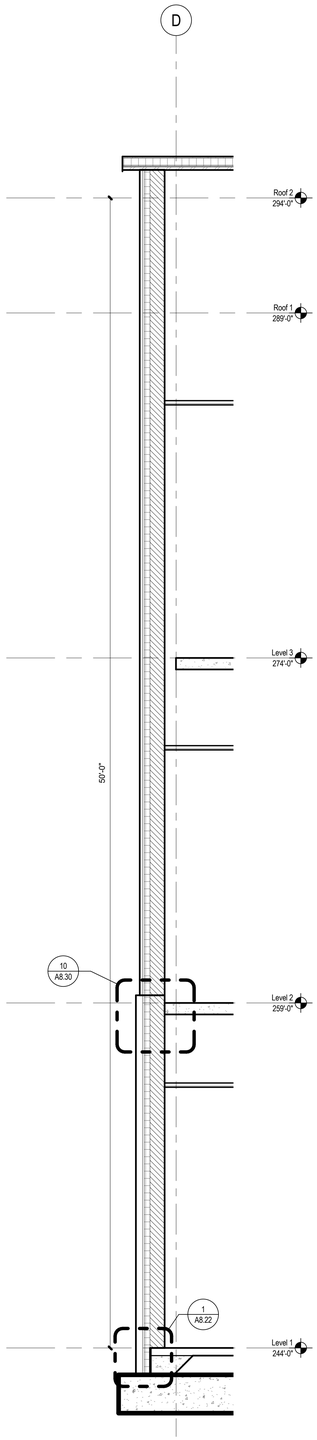

WALL SECTION - SECTOR A (5)
SCALE: 3/8" = 1'-0"

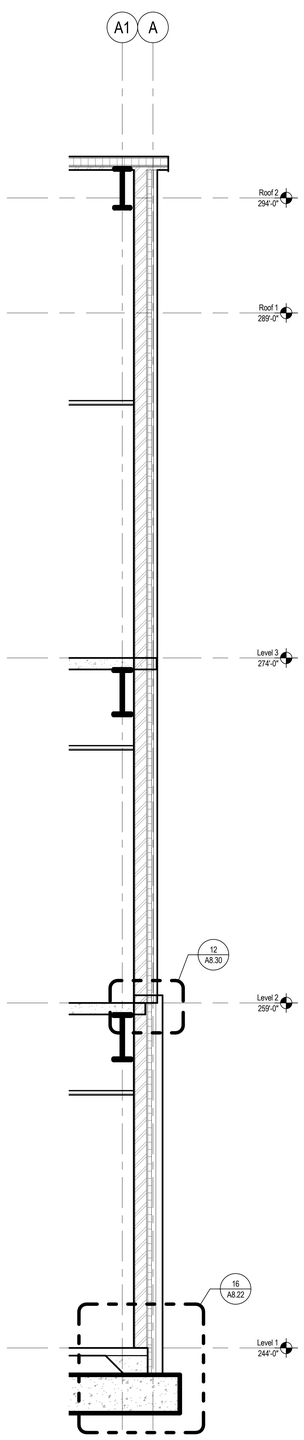

WALL SECTION - SECTOR A (4)
SCALE: 3/8" = 1'-0"

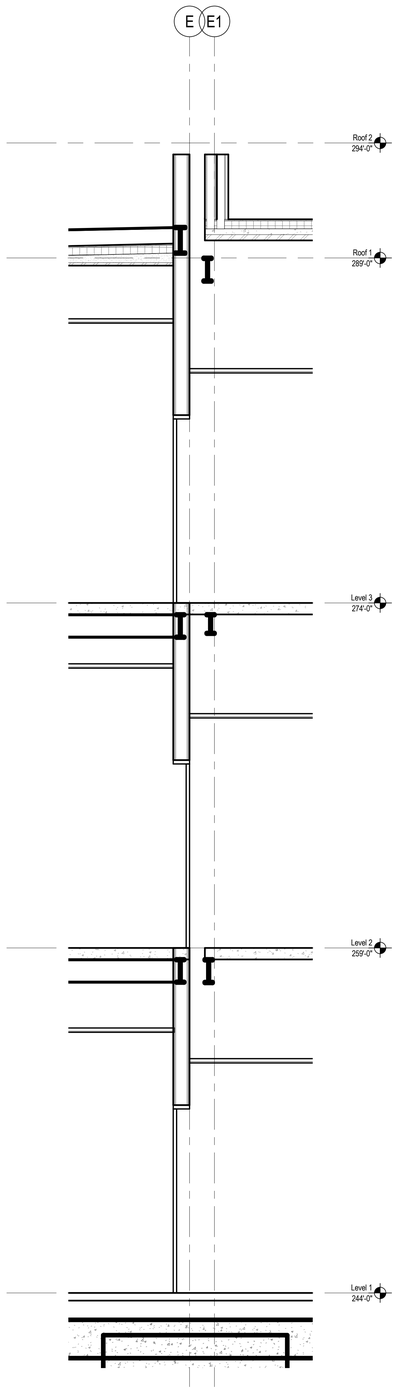

WALL SECTION - SECTOR A (3)
SCALE: 3/8" = 1'-0"

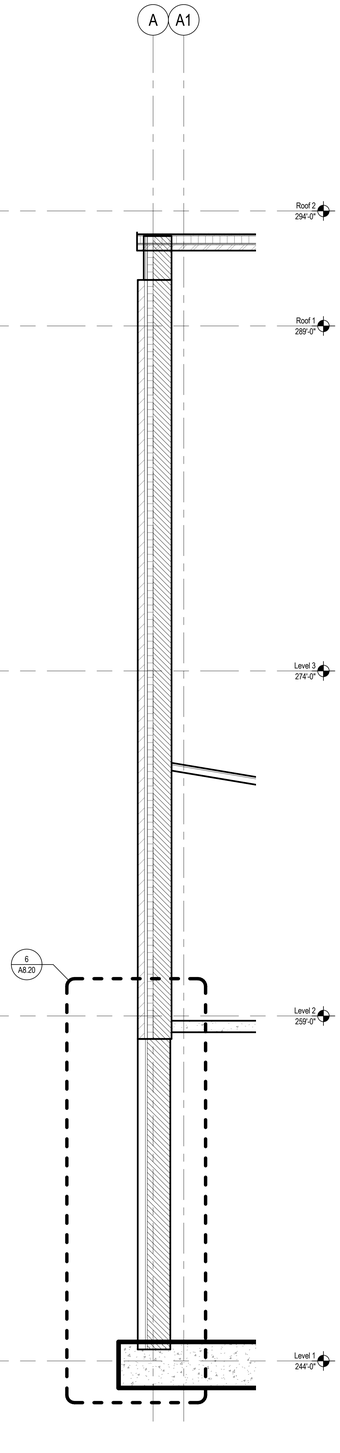

WALL SECTION - SECTOR A (2)
SCALE: 3/8" = 1'-0"

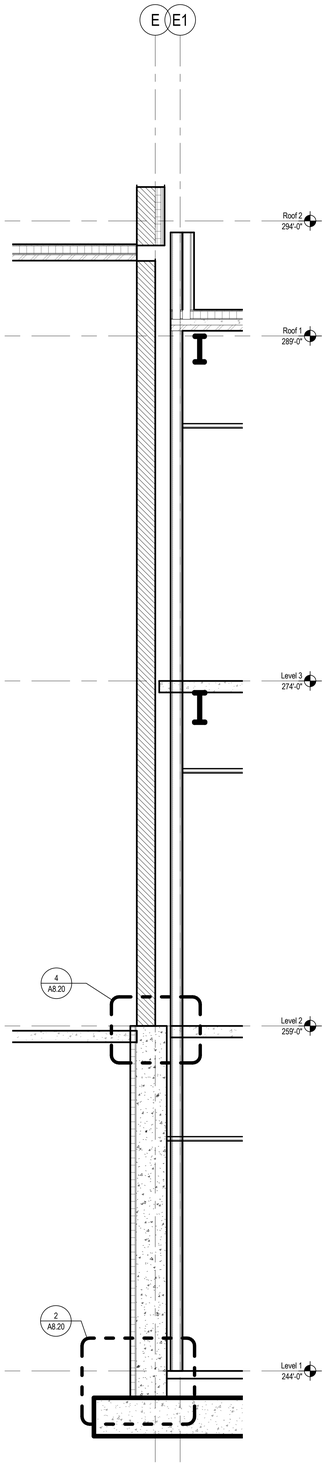

WALL SECTION - SECTOR A (1)
SCALE: 3/8" = 1'-0"

BRIC
ARCHITECTURE, INC.
1233 NW NORTHRUP STREET, SUITE 100
PORTLAND, OR 97209 T 503.595.4900

New Middle School / High School
Seaside School District
1801 S. FRANKLIN STREET, SEASIDE, OR 97138
t: 503-738-5591

NOT FOR CONSTRUCTION

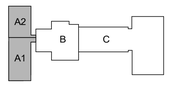

key plan

phase	BP2 PERMIT SET
date	6/15/2018
revisions	
project #	17007

WALL SECTIONS - SECTOR A

A3.41

6/15/2018 5:24:22 PM
C:\BRIC Projects\17007 SSD-MSHS_christie.sterne.rvt

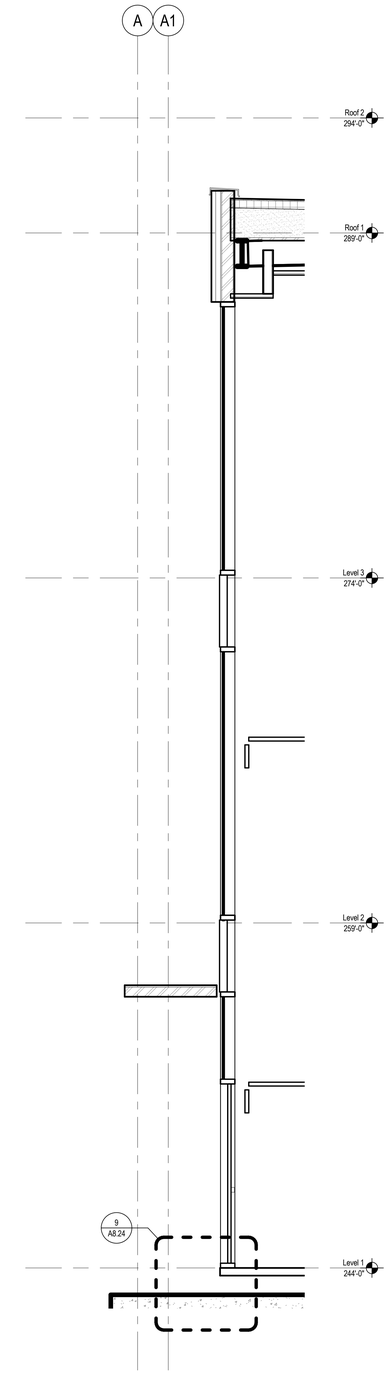

WALL SECTION - SECTOR A 2

SCALE: 3/8" = 1'-0"

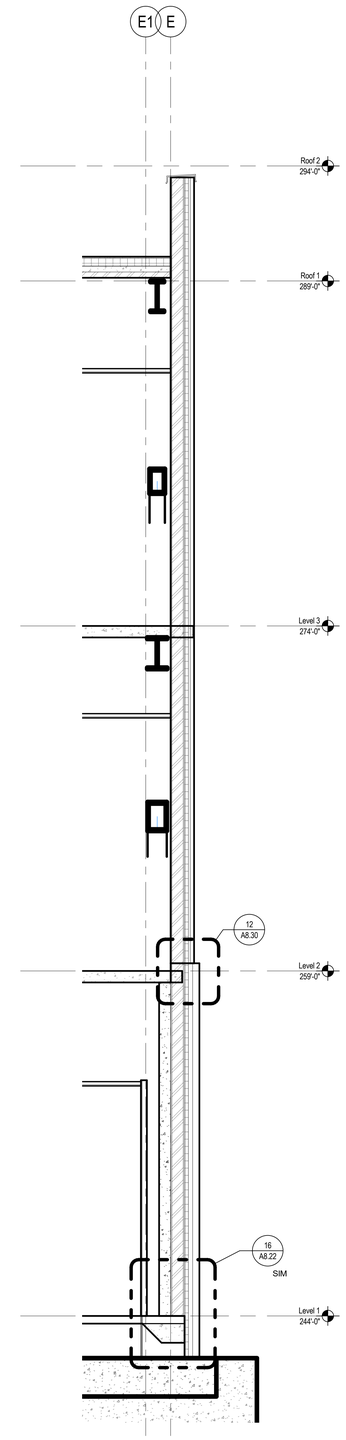

WALL SECTION - SECTOR A 1

SCALE: 3/8" = 1'-0"

BR|IC
ARCHITECTURE, INC.
1233 NW NORTHRUP STREET, SUITE 100
PORTLAND, OR 97209 T 503.595.4900

New Middle School / High School

Seaside School District

1801 S. FRANKLIN STREET, SEASIDE, OR 97138
t: 503-738-5591

NOT FOR CONSTRUCTION

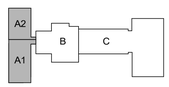

key plan

phase	BP2 PERMIT SET
date	6/15/2018
revisions	
project #	17007

WALL SECTIONS - SECTOR A

A3.42

6/15/2018 5:24:24 PM
C:\BRIC Projects\17007 SSD-MSHS_christie.sterne.rvt

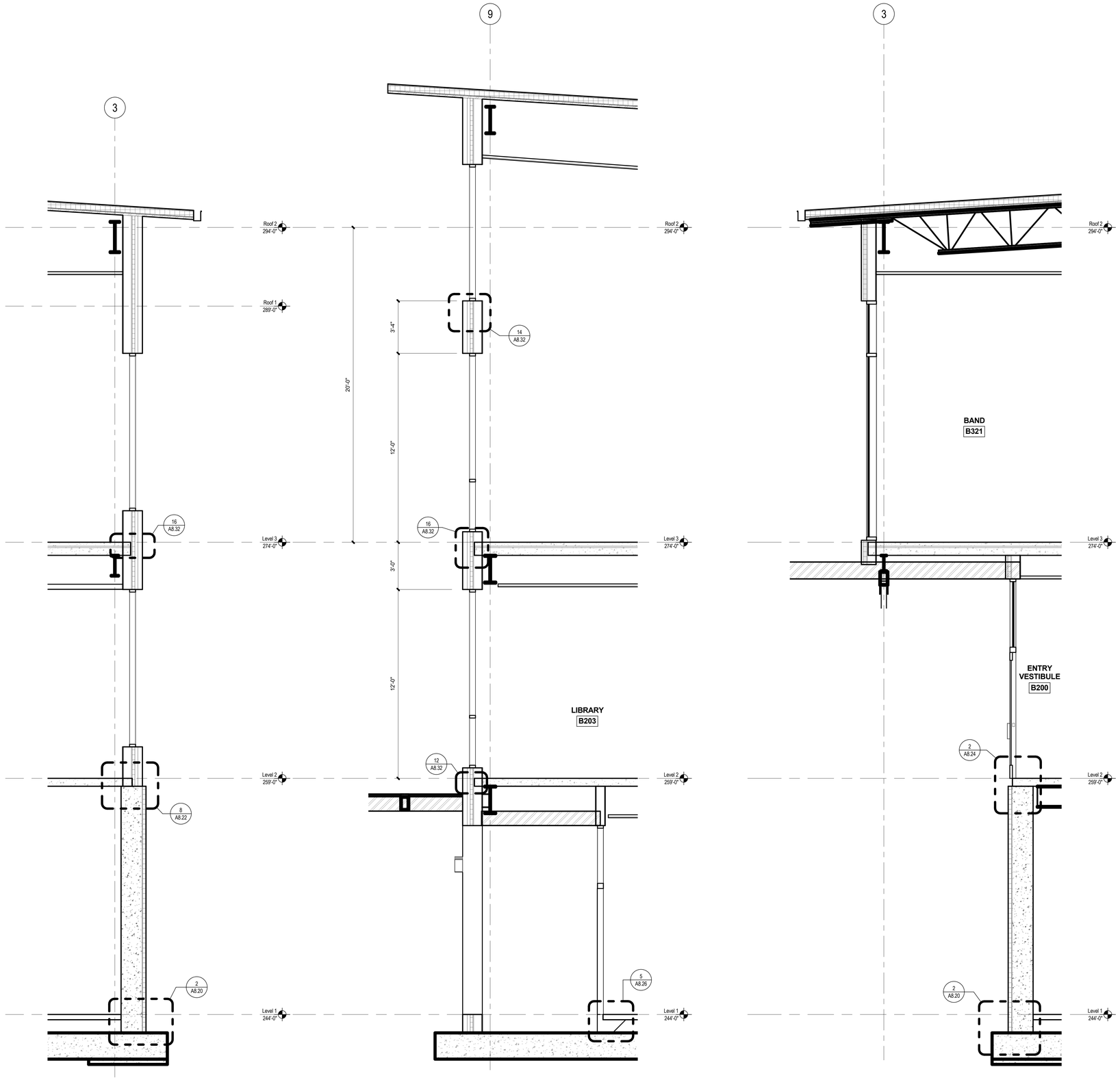

WALL SECTION - SECTOR B (3)
SCALE: 3/8" = 1'-0"

WALL SECTION - SECTOR B (2)
SCALE: 3/8" = 1'-0"

WALL SECTION - SECTOR B (1)
SCALE: 3/8" = 1'-0"

BRIC ARCHITECTURE, INC.
1233 NW NORTHRUP STREET, SUITE 100
PORTLAND, OR 97209 T 503.595.4900

New Middle School / High School
Seaside School District
1801 S. FRANKLIN STREET, SEASIDE, OR 97138
t: 503-738-5591

NOT FOR CONSTRUCTION

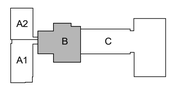

key plan

phase	BP2 PERMIT SET
date	6/15/2018
revisions	
project #	17007

WALL SECTIONS - SECTOR B

A3.44

6/15/2018 5:24:27 PM
C:\BRIC Projects\17007 SSD-MSHS_christie.sterne.rvt

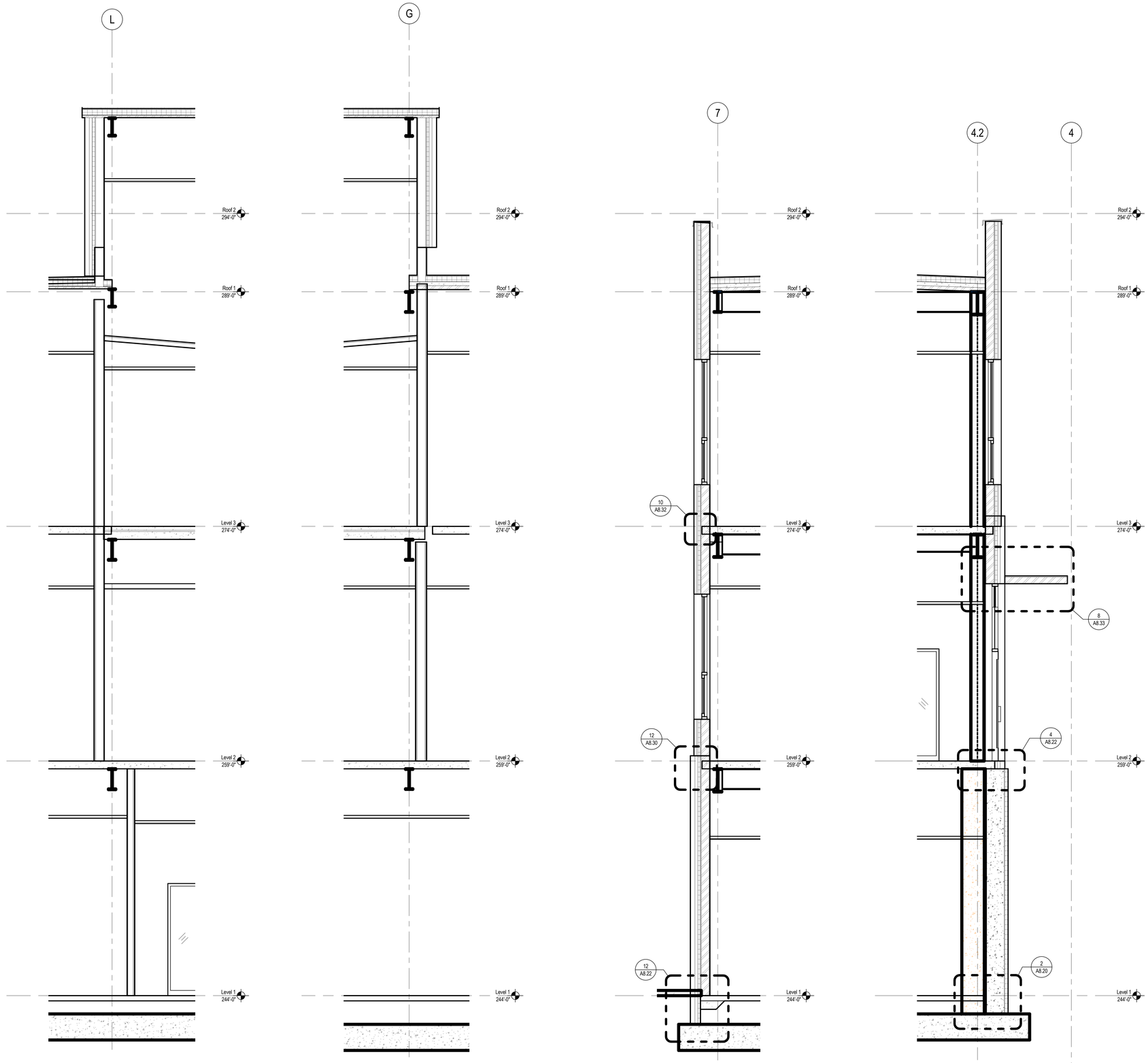

WALL SECTION - SECTOR B (4)
SCALE: 3/8" = 1'-0"

WALL SECTION - SECTOR B (3)
SCALE: 3/8" = 1'-0"

WALL SECTION - SECTOR B (2)
SCALE: 3/8" = 1'-0"

WALL SECTION - SECTOR B (1)
SCALE: 3/8" = 1'-0"

BRIC ARCHITECTURE, INC.
1233 NW NORTHRUP STREET, SUITE 100
PORTLAND, OR 97209 T 503.595.4900

New Middle School / High School
Seaside School District
1801 S. FRANKLIN STREET, SEASIDE, OR 97138
t: 503-738-5591

NOT FOR CONSTRUCTION

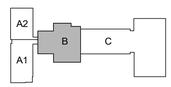

key plan

phase	BP2 PERMIT SET
date	6/15/2018
revisions	
project #	17007

WALL SECTIONS - SECTOR B

A3.45

6/15/2018 5:24:29 PM
C:\BRIC Projects\17007 SSD-MSHS_christie.sterne.rvt

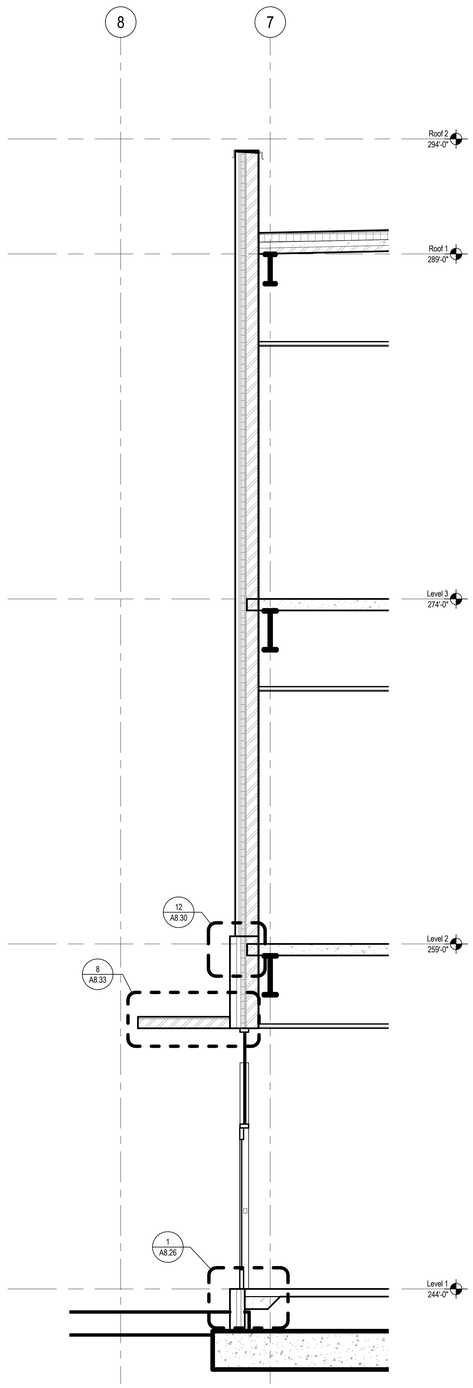

WALL SECTION - SECTOR B (4)
SCALE: 3/8" = 1'-0"

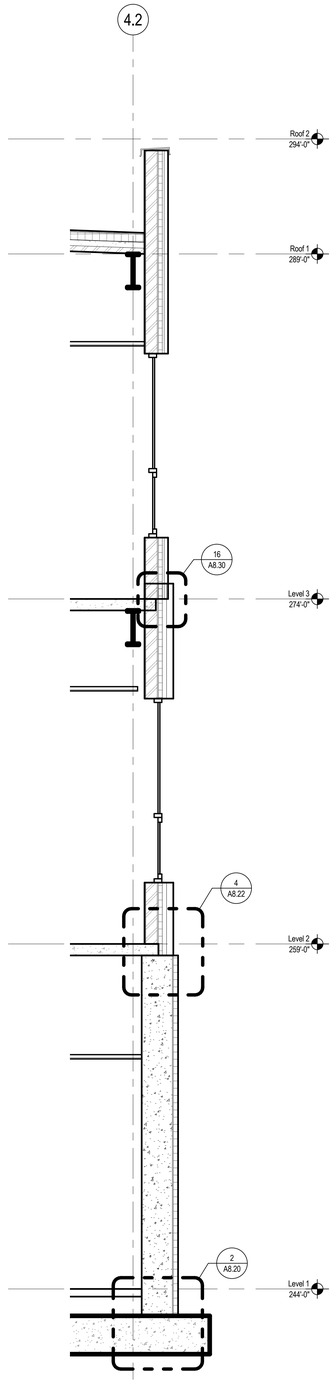

WALL SECTION - SECTOR B (3)
SCALE: 3/8" = 1'-0"

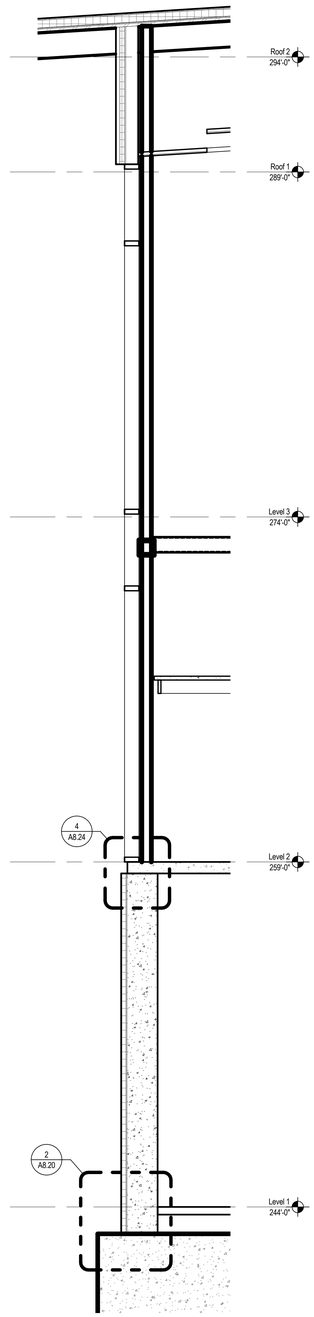

WALL SECTION - SECTOR B (2)
SCALE: 3/8" = 1'-0"

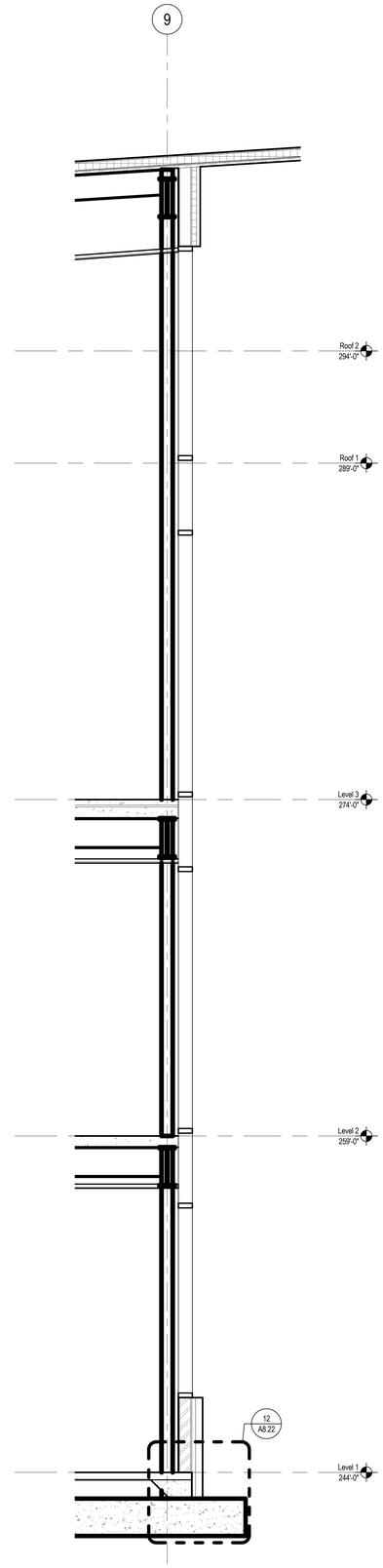

WALL SECTION - SECTOR B (1)
SCALE: 3/8" = 1'-0"

BR|IC
ARCHITECTURE, INC.
1233 NW NORTHRUP STREET, SUITE 100
PORTLAND, OR 97209 T 503.595.4900

New Middle School / High School
Seaside School District
1801 S. FRANKLIN STREET, SEASIDE, OR 97138
t: 503-738-5591

NOT FOR CONSTRUCTION

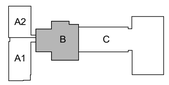

key plan

phase	BP2 PERMIT SET
date	6/15/2018
revisions	
project #	17007

WALL SECTIONS - SECTOR B

A3.46

6/15/2018 5:24:32 PM
C:\BRIC Projects\17007 SSD-MSHS_christie.sterne.rvt

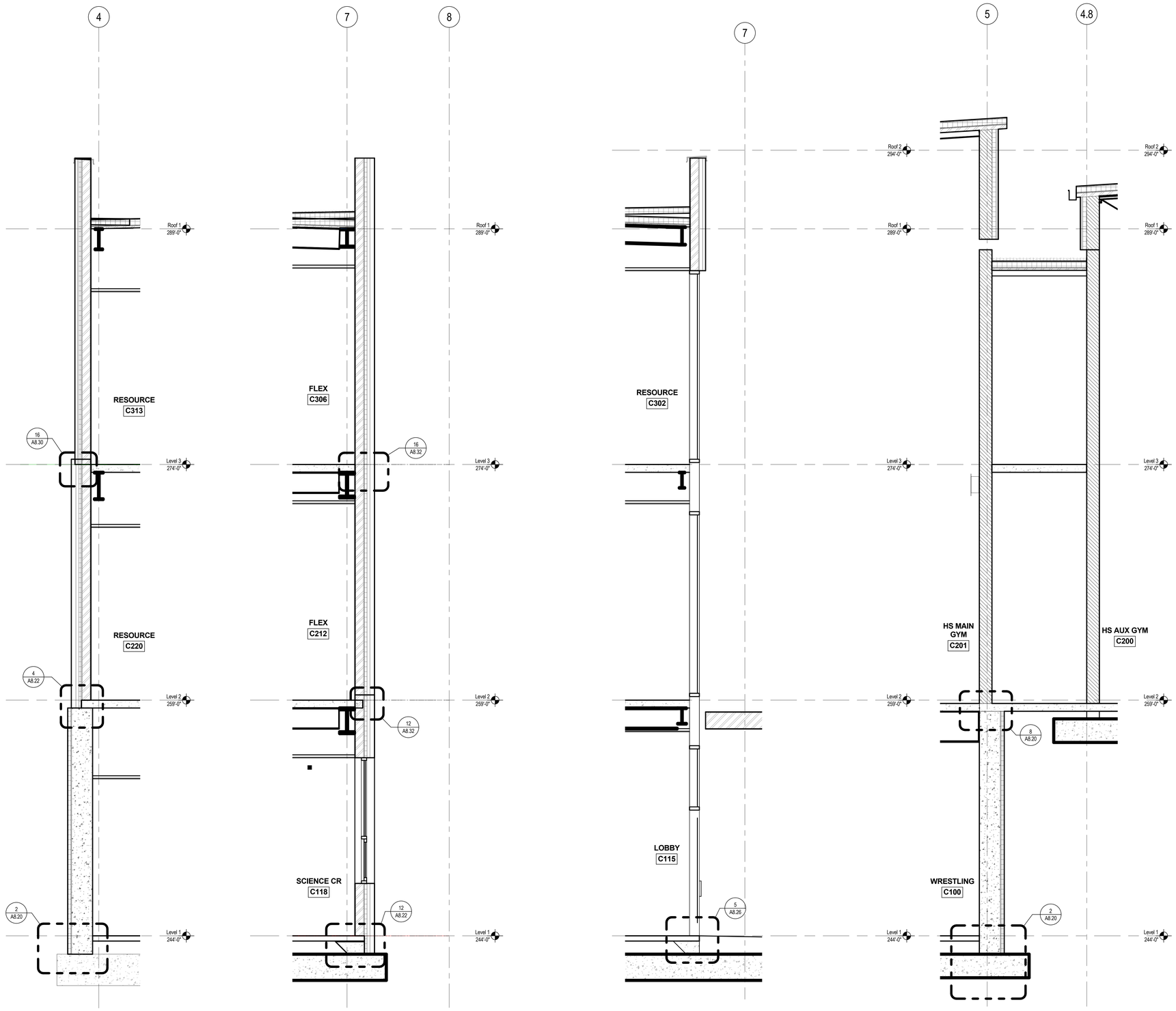

WALL SECTION - SECTOR C (4)
SCALE: 3/8" = 1'-0"

WALL SECTION - SECTOR C (3)
SCALE: 3/8" = 1'-0"

WALL SECTION - SECTOR C (2)
SCALE: 3/8" = 1'-0"

WALL SECTION - SECTOR C (1)
SCALE: 3/8" = 1'-0"

BRIC ARCHITECTURE, INC.
1233 NW NORTHRUP STREET, SUITE 100
PORTLAND, OR 97209 T 503.595.4900

New Middle School / High School
Seaside School District
1801 S. FRANKLIN STREET, SEASIDE, OR 97138
t: 503-738-5591

NOT FOR CONSTRUCTION

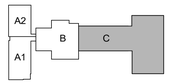

key plan

phase	BP2 PERMIT SET
date	6/15/2018
revisions	
project #	17007

WALL SECTIONS - SECTOR C

A3.47

6/15/2018 5:24:35 PM
C:\BRIC Projects\17007 SSD-MSHS_christie.sterne.rvt

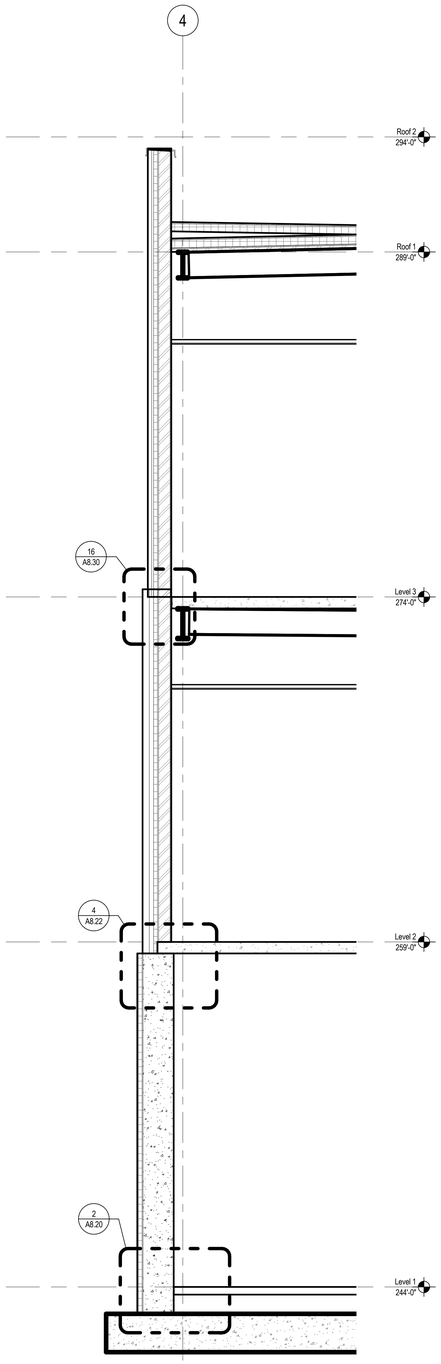

WALL SECTION-SECTOR C 4
SCALE: 3/8" = 1'-0"

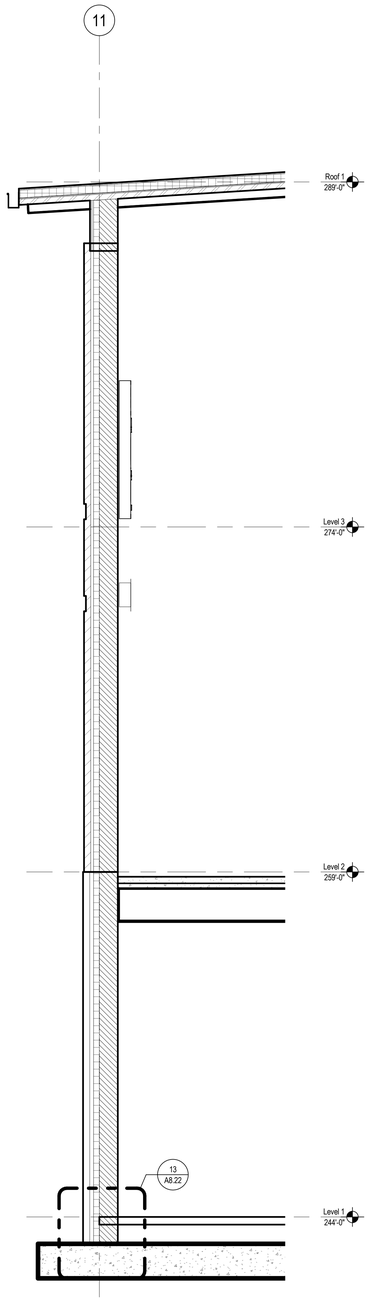

WALL SECTION - SECTOR C 3
SCALE: 3/8" = 1'-0"

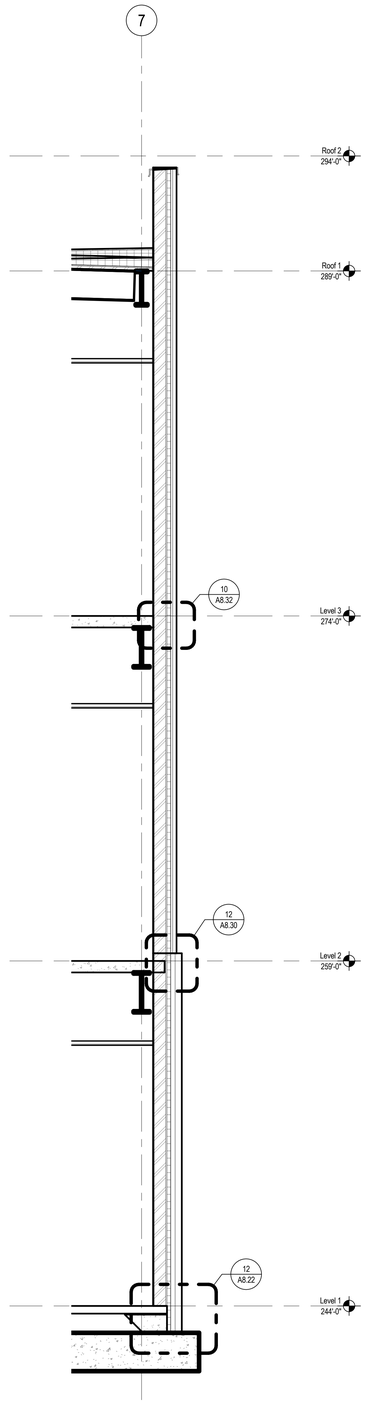

WALL SECTION-SECTOR C 2
SCALE: 3/8" = 1'-0"

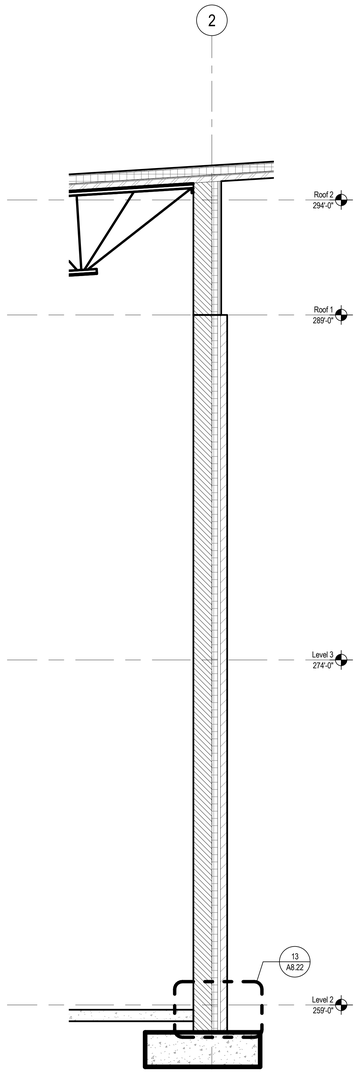

WALL SECTION - SECTOR C 1
SCALE: 3/8" = 1'-0"

BR|IC
ARCHITECTURE, INC.
1233 NW NORTHRUP STREET, SUITE 100
PORTLAND, OR 97209 T 503.595.4900

New Middle School / High School

Seaside School District
1801 S. FRANKLIN STREET, SEASIDE, OR 97138
t: 503-738-5591

NOT FOR CONSTRUCTION

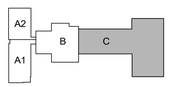

key plan

phase	BP2 PERMIT SET
date	6/15/2018
revisions	
project #	17007

WALL SECTIONS - SECTOR C

A3.48

6/15/2018 5:24:38 PM
C:\BRIC Projects\17007 SSD-MSHS_christie.sterne.rvt

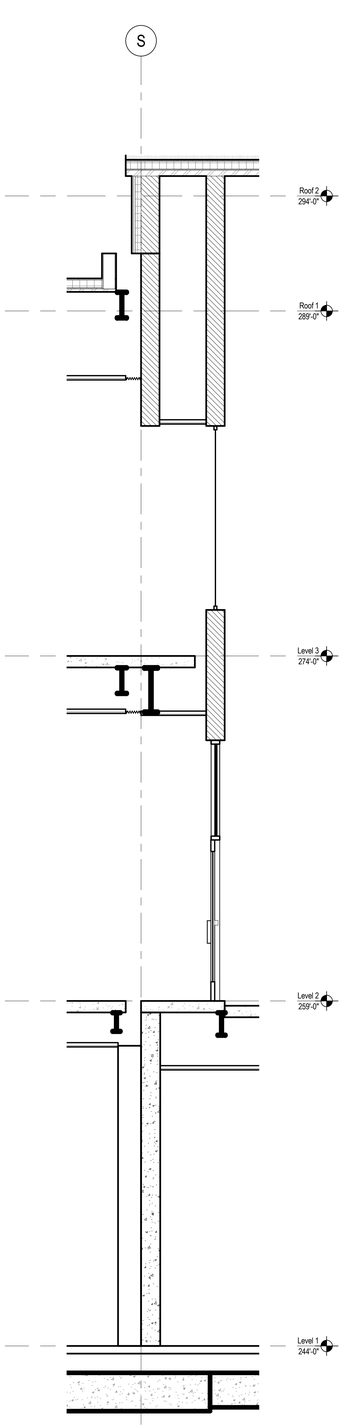

WALL SECTION - SECTOR C 4
SCALE: 3/8" = 1'-0"

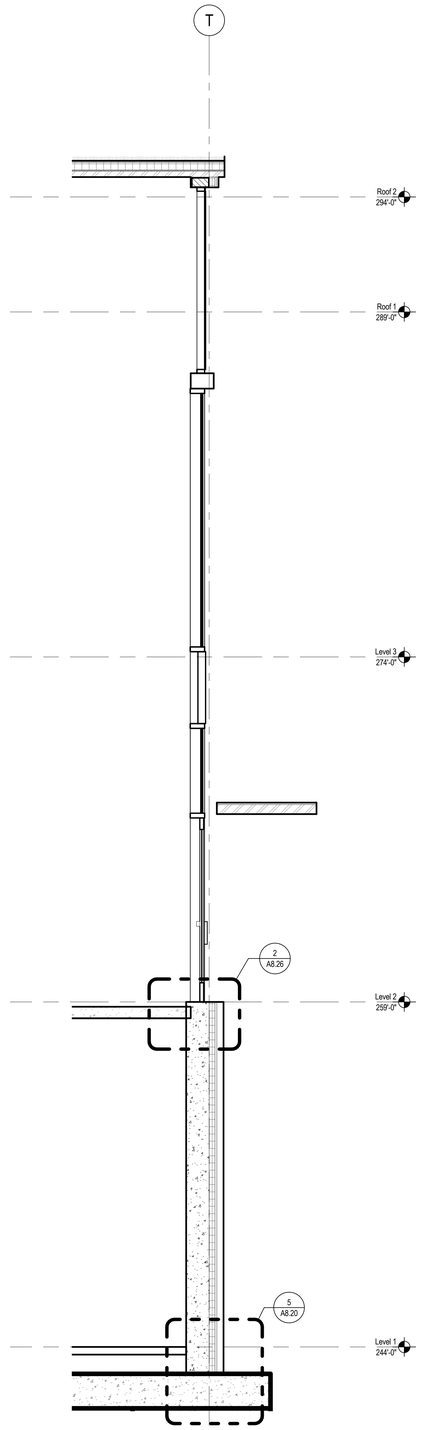

WALL SECTION - SECTOR C 3
SCALE: 3/8" = 1'-0"

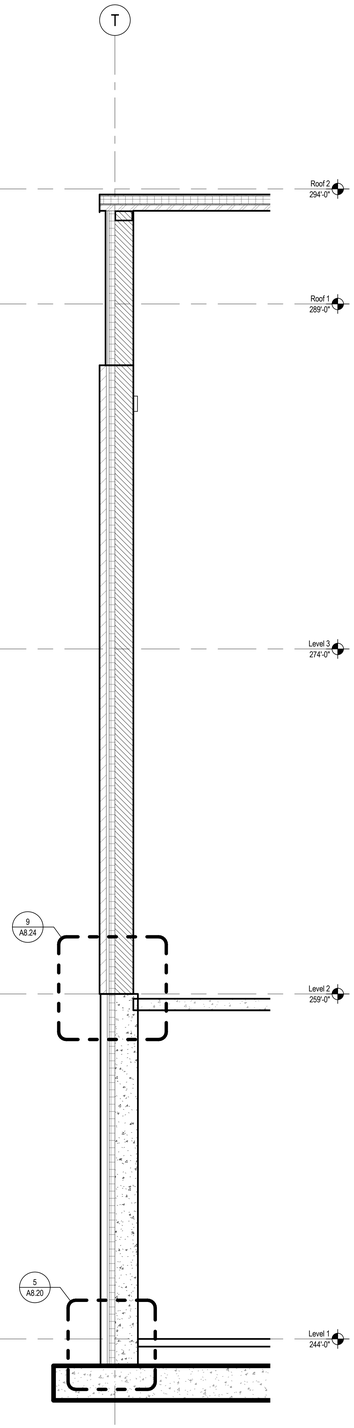

WALL SECTION - SECTOR C 2
SCALE: 3/8" = 1'-0"

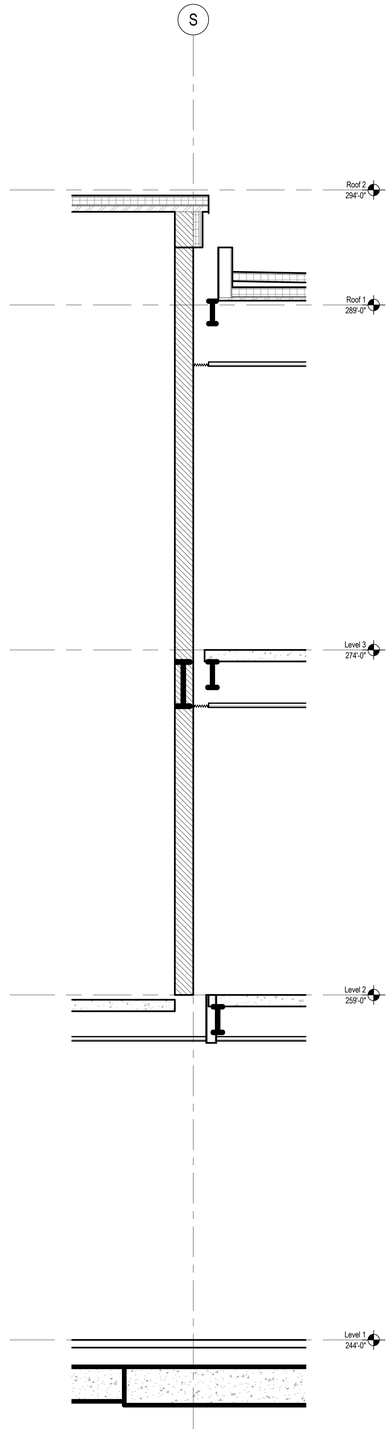

WALL SECTION - SECTOR C 1
SCALE: 3/8" = 1'-0"

BR|IC
ARCHITECTURE, INC.
1233 NW NORTHRUP STREET, SUITE 100
PORTLAND, OR 97209 T 503.595.4900

New Middle School / High School
Seaside School District
1801 S. FRANKLIN STREET, SEASIDE, OR 97138
t: 503-738-5591

NOT FOR CONSTRUCTION

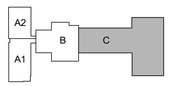

key plan

phase	BP2 PERMIT SET
date	6/15/2018
revisions	
project #	17007

WALL SECTIONS - SECTOR C

A3.49

6/15/2018 5:24:41 PM
C:\BRIC Projects\17007 SSD-MSHS_christie.sterne.rvt

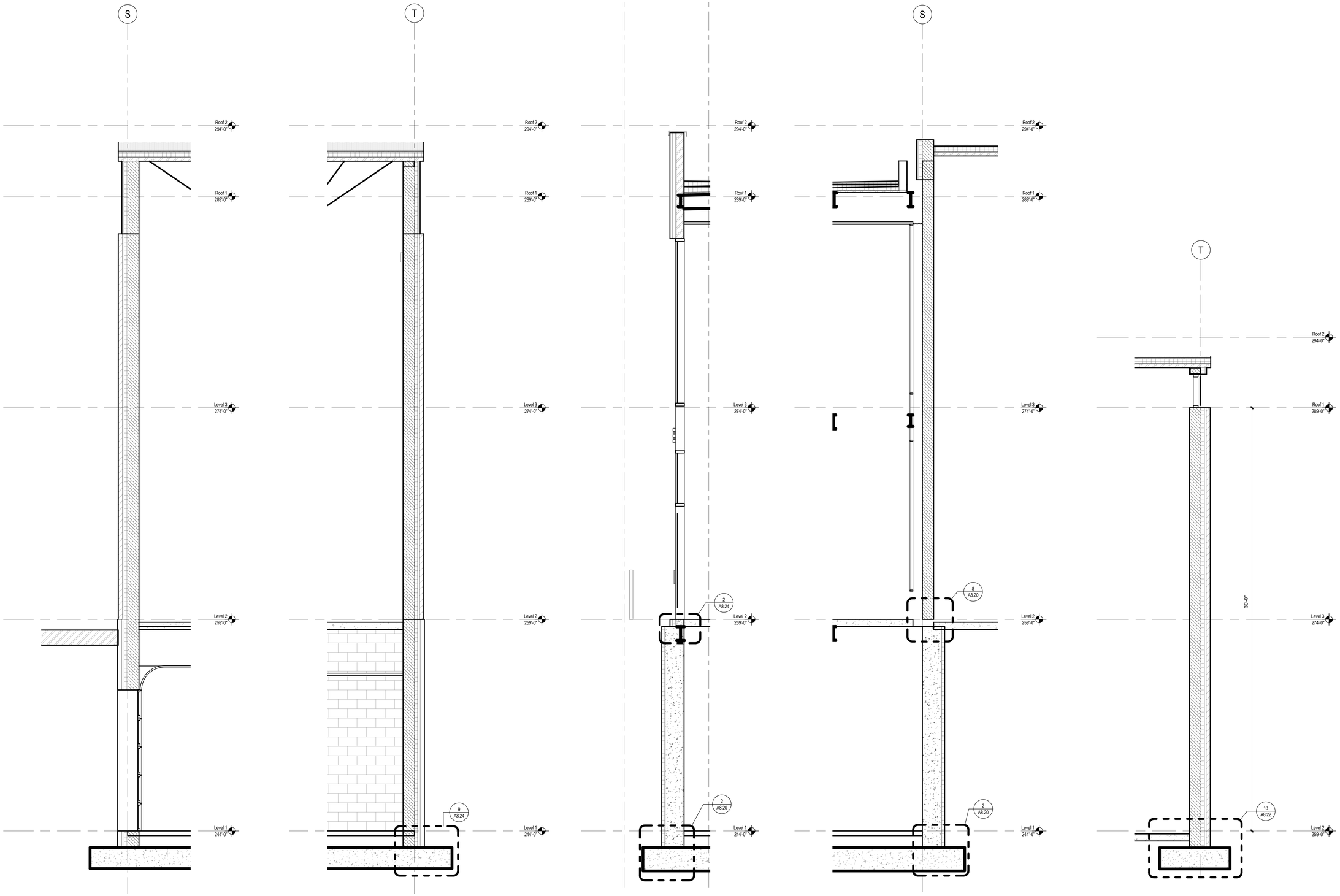

WALL SECTION - SECTOR C (5) SCALE: 3/8" = 1'-0"

WALL SECTION - SECTOR C (4) SCALE: 3/8" = 1'-0"

WALL SECTION - SECTOR C (3) SCALE: 3/8" = 1'-0"

WALL SECTION - SECTOR C (2) SCALE: 3/8" = 1'-0"

WALL SECTION - SECTOR C (1) SCALE: 3/8" = 1'-0"

6/15/2018 5:24:44 PM
C:\BRIC Projects\17007 SSD-MSHS_christie.sterne.rvt

BRIC ARCHITECTURE, INC.
1233 NW NORTHRUP STREET, SUITE 100
PORTLAND, OR 97209 T 503.595.4900

New Middle School / High School
Seaside School District
1801 S. FRANKLIN STREET, SEASIDE, OR 97138
t: 503-738-5591

NOT FOR CONSTRUCTION

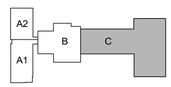

key plan

phase	BP2 PERMIT SET
date	6/15/2018
revisions	
project #	17007

WALL SECTIONS - SECTOR C

A3.50

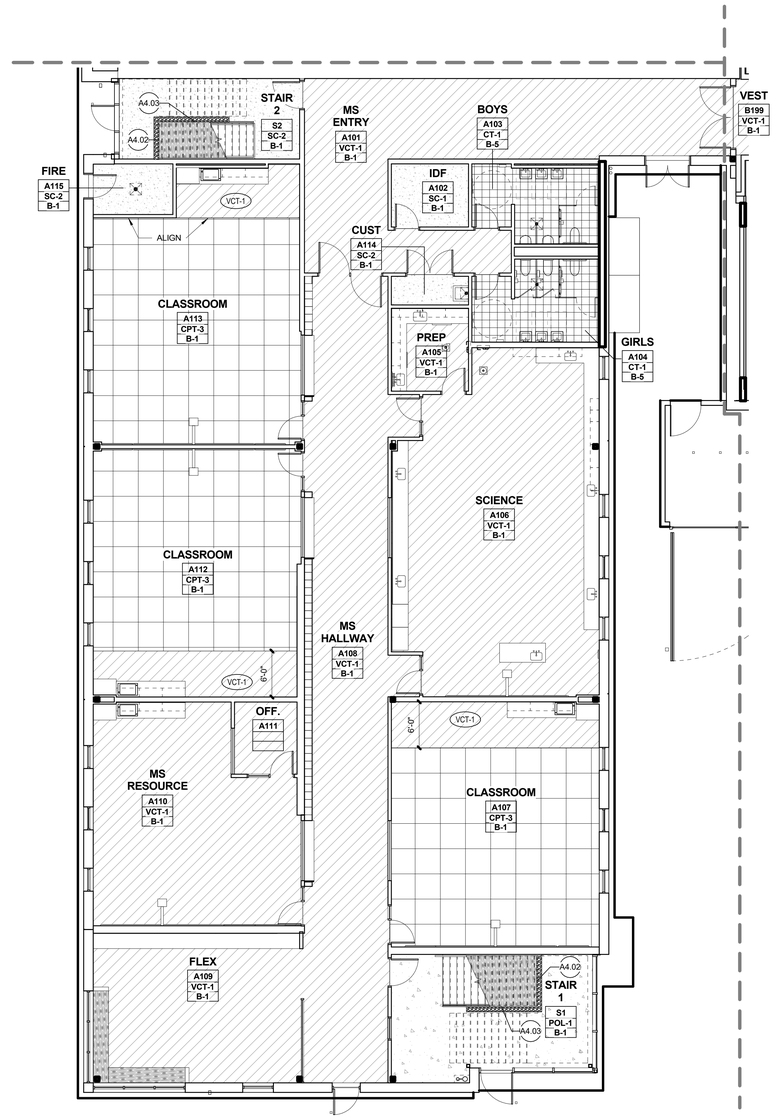

FINISH FLOOR PLAN - LEVEL 1 - SECTOR A1 (1)

SCALE: 1/8" = 1'-0"

KEYNOTES

A4.02 BUTCHER BLOCK WOOD SLATTED BENCH
A4.03 PEBBLE TILE BORDER (CT-9)

LEGEND:

A100 / CPT- X / B-X — ROOM NUMBER / FLOOR FINISH / BASE TYPE

- CPT-1 CARPET TILE
- CPT-2 CARPET TILE
- CPT-3 CARPET TILE
- EM-1 ENTRY MAT
- VCT VINYL COMPOSITION TILE TYPE 1-5, PATTERN TBD
- SV-1 SHEET VINYL
- CT-1 CERAMIC TILE
- WAF-1 WOOD ATHLETIC FLOORING
- SC-2 SEALED CONCRETE
- POL-1 POLISHED CONCRETE
- SF-1 SAFETY FLOORING (KITCHEN)
- SF-2 SAFETY FLOORING (CULINARY)

CORNER GUARDS

ASSUME A TOTAL OF (100) STAINLESS STEEL CORNERGAURDS FOR ENTIRE BUILDING; 3"X3" LEGS, TYPICAL

B-1	4" RUBBER BASE
B-2	6" COVED BASE TO MATCH SV-1
B-3	6" COVED BASE TO MATCH SF-1
B-4	6" COVED BASE TO MATCH SF-2
B-5	6" COVED BASETO MATCH CT-1
B-6	4" VENTED BASE TO MATCH WAF-1

GENERAL NOTES:

1. SEE FINISH LEGEND FOR MATERIAL DESIGNATIONS.
2. EXTEND FLOOR FINISHES UNDER TOEKICKS, OPEN COUNTERTOPS AND EQUIPMENT, TYPICAL.
3. ALL CLOSET FINISHES SHALL MATCH THE ADJACENT ROOM UNLESS SPECIFICALLY NOTED OTHERWISE.
4. PROVIDE TRANSITION STRIPS WHERE UNLIKE MATERIALS MEET, TYPICAL.
5. WHERE FLOOR FINISH CHANGES MATERIAL, PATTERN OR COLOR AT A DOOR, LOCATE TRANSITION UNDER CENTERLINE OF DOOR.
6. STAIR 1 AND STAIR 3 FINISHES TO BE PRECAST CONCRETE TREADS WITH PERFORATED METAL RISERS, UNLESS OTHERWISE NOTED. STAIR LANDINGS TO BE PRECAST CONCRETE UNLESS OTHERWISE NOTED. ASSUME ALL STAIRS TO HAVE METAL GUARDRAIL (PAINTED HPC-X) AND WOOD HANDRAILS (WOOD WITH CLEAR FINISH). IN-FILL GUARDRAIL PANELS TO BE CUSTOM PERFORATED PANELS.
7. STAIR 2 AND STAIR 4 FINISHED TO BE COMMERCIAL QUALITY STEEL STAIRS (PAINTED HPC-X) WITH CAST IN PLACE CONCRETE TREADS, SC-1

6/15/2018 5:24:48 PM
C:\BRIC Projects\17007 SSD-MSHS_christie.sterne.rvt

BRIC ARCHITECTURE, INC.
1233 NW NORTHRUP STREET, SUITE 100
PORTLAND, OR 97209 T 503.595.4900

New Middle School / High School
Seaside School District
1801 S. FRANKLIN STREET, SEASIDE, OR 97138
t: 503-738-5591

NOT FOR CONSTRUCTION

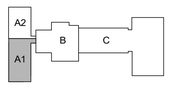

key plan

phase	BP2 PERMIT SET
date	6/15/2018
revisions	
project #	17007

FINISH FLOOR PLAN
LEVEL 1 - SECTOR A1

A4.21

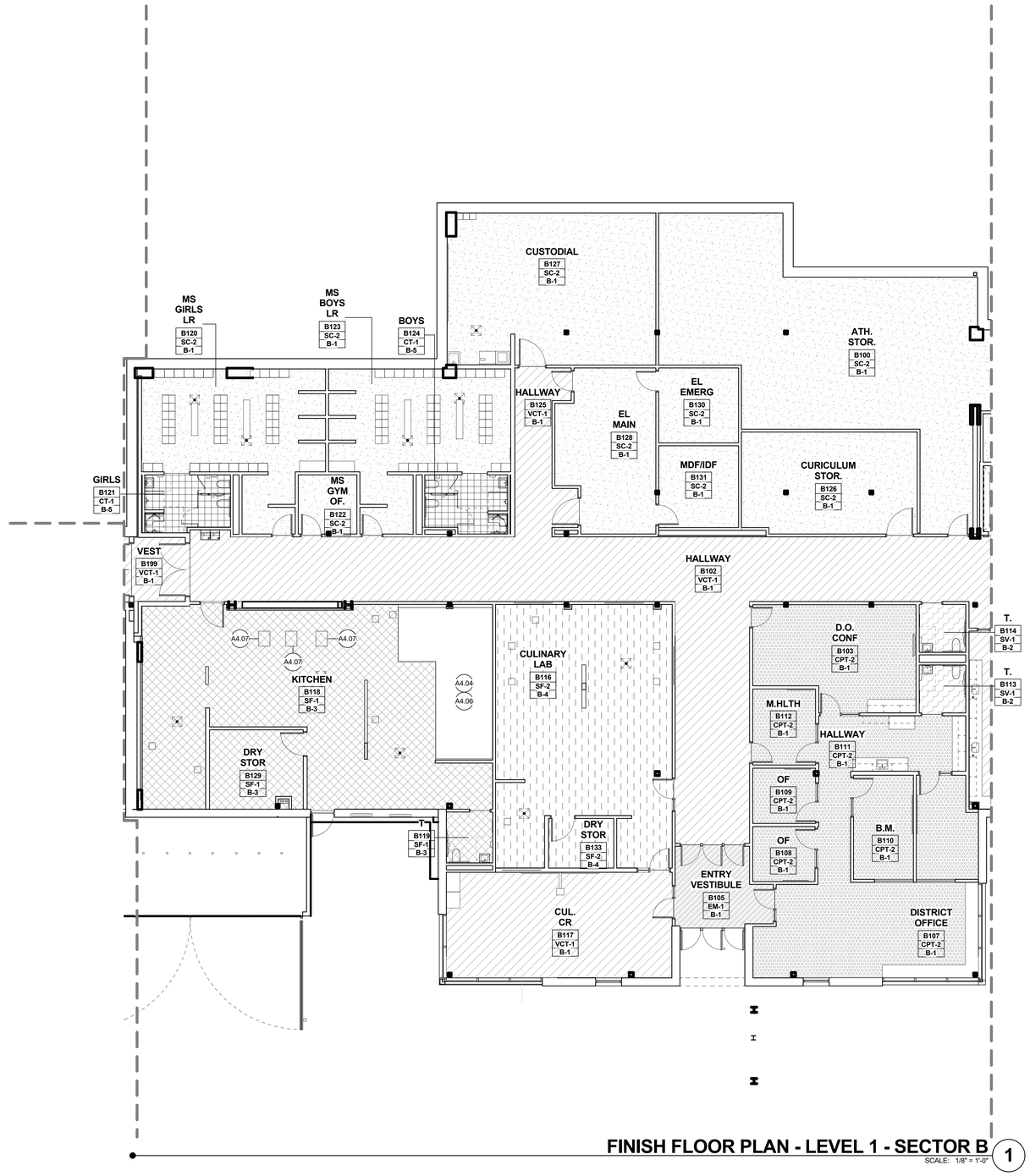

FINISH FLOOR PLAN - LEVEL 1 - SECTOR B

SCALE: 1/8" = 1'-0"

1

LEGEND:

A100 — ROOM NUMBER
CPT- X — FLOOR FINISH
B-X — BASE TYPE

CPT-1	CARPET TILE	SV-1	SHEET VINYL	SF-1	SAFETY FLOORING (KITCHEN)
CPT-2	CARPET TILE	CT-1	CERAMIC TILE	SF-2	SAFETY FLOORING (CULINARY)
CPT-3	CARPET TILE	WAF-1	WOOD ATHLETIC FLOORING		
EM-1	ENTRY MAT	SC-2	SEALED CONCRETE		
VCT	VINYL COMPOSITION TILE TYPE 1-5, PATTERN TBD	POL-1	POLISHED CONCRETE		

CORNER GUARDS

ASSUME A TOTAL OF (100) STAINLESS STEEL CORNERGAURDS FOR ENTIRE BUILDING; 3"X3" LEGS, TYPICAL

B-1	4" RUBBER BASE
B-2	6" COVED BASE TO MATCH SV-1
B-3	6" COVED BASE TO MATCH SF-1
B-4	6" COVED BASE TO MATCH SF-2
B-5	6" COVED BASETO MATCH CT-1
B-6	4" VENTED BASE TO MATCH WAF-1

GENERAL NOTES:

1 SEE FINISH LEGEND FOR MATERIAL DESIGNATIONS.

2 EXTEND FLOOR FINISHES UNDER TOEKICKS, OPEN COUNTERTOPS AND EQUIPMENT, TYPICAL.

3 ALL CLOSET FINISHES SHALL MATCH THE ADJACENT ROOM UNLESS SPECIFICALLY NOTED OTHERWISE.

4 PROVIDE TRANSITION STRIPS WHERE UNLIKE MATERIALS MEET, TYPICAL.

5 WHERE FLOOR FINISH CHANGES MATERIAL, PATTERN OR COLOR AT A DOOR, LOCATE TRANSITION UNDER CENTERLINE OF DOOR.

6 STAIR 1 AND STAIR 3 FINISHES TO BE PRECAST CONCRETE TREADS WITH PERFORATED METAL RISERS, UNLESS OTHERWISE NOTED. STAIR LANDINGS TO BE PRECAST CONCRETE UNLESS OTHERWISE NOTED. ASSUME ALL STAIRS TO HAVE METAL GUARDRAIL (PAINTED HPC-X) AND WOOD HANDRAILS (WOOD WITH CLEAR FINISH). IN-FILL GUARDRAIL PANELS TO BE CUSTOM PERFORATED PANELS.

7 STAIR 2 AND STAIR 4 FINISHED TO BE COMMERCIAL QUALITY STEEL STAIRS (PAINTED HPC-X) WITH CAST IN PLACE CONCRETE TREADS, SC-1

KEYNOTES

A4.04 WALK-IN COOLERS - CONFIRM REQUIRED DEPTH WITH MANUFACTURER

A4.06 SF-1 INSIDE WALK-IN COOLER & FREEZER

A4.07 SLAB RECESS FOR KITCHEN EQUIPMENT - CONFIRM REQUIRED DEPTH WITH MANUFACTURER

6/15/2018 5:24:53 PM
C:\BRIC Projects\17007 SSD-MSHS_christie.sterne.rvt

BR|IC ARCHITECTURE, INC.
1233 NW NORTHRUP STREET, SUITE 100
PORTLAND, OR 97209 T 503.595.4900

New Middle School / High School
Seaside School District
1801 S. FRANKLIN STREET, SEASIDE, OR 97138
t: 503-738-5591

NOT FOR CONSTRUCTION

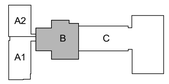

key plan

phase	BP2 PERMIT SET
date	6/15/2018
revisions	
project #	17007

FINISH FLOOR PLAN
LEVEL 1 - SECTOR B

A4.22

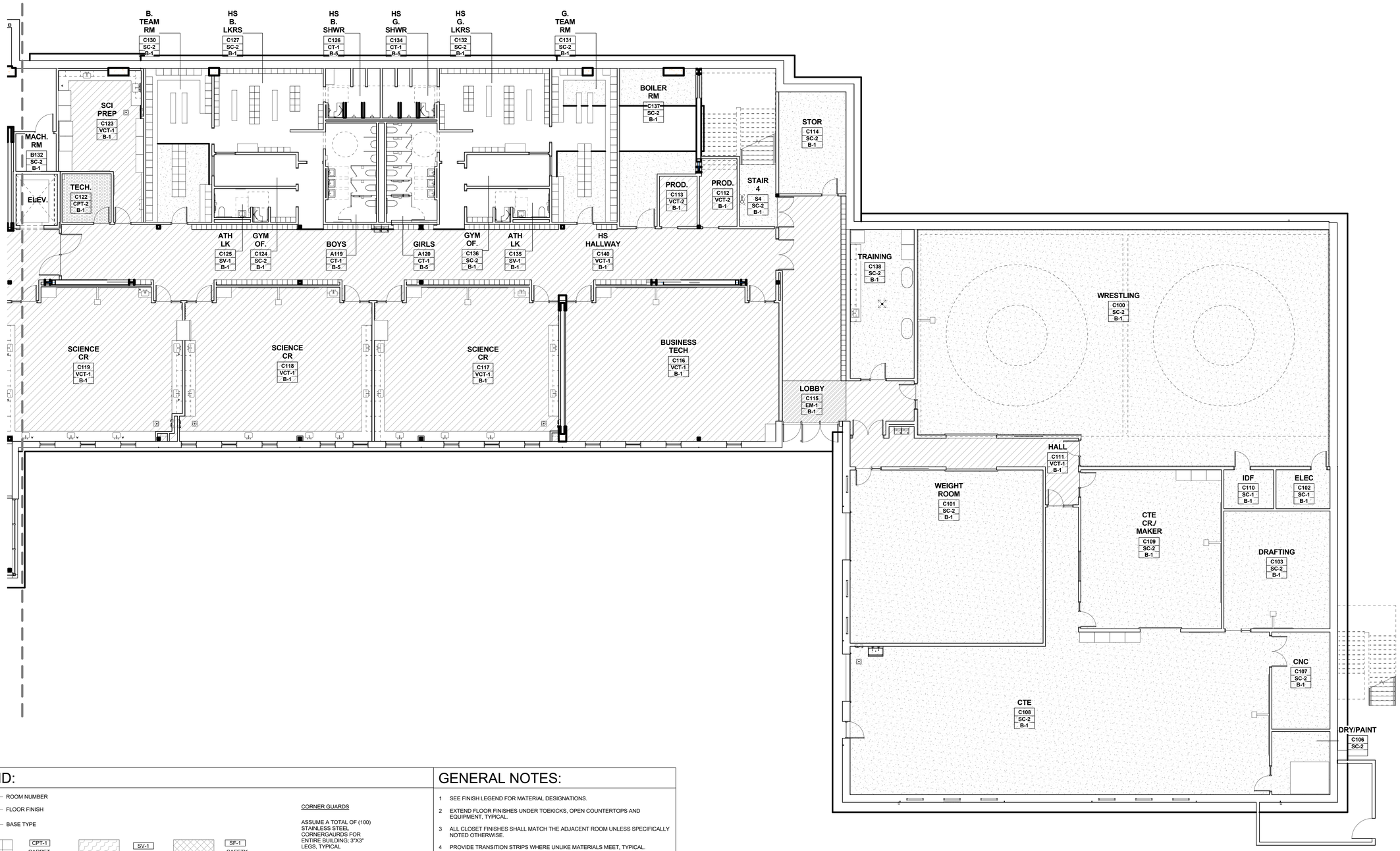

FINISH FLOOR PLAN - LEVEL 1 - SECTOR C

SCALE: 1/8" = 1'-0"

1

LEGEND:

A100 — ROOM NUMBER
CPT- X — FLOOR FINISH
B-X — BASE TYPE

- CPT-1 CARPET TILE
- CPT-2 CARPET TILE
- CPT-3 CARPET TILE
- EM-1 ENTRY MAT
- VCT VINYL COMPOSITION TILE TYPE 1-5, PATTERN TBD
- SV-1 SHEET VINYL
- CT-1 CERAMIC TILE
- WAF-1 WOOD ATHLETIC FLOORING
- SC-2 SEALED CONCRETE
- POL-1 POLISHED CONCRETE
- SF-1 SAFETY FLOORING (KITCHEN)
- SF-2 SAFETY FLOORING (CULINARY)

CORNER GUARDS

ASSUME A TOTAL OF (100) STAINLESS STEEL CORNERGAURDS FOR ENTIRE BUILDING; 3"X3" LEGS, TYPICAL

B-1	4" RUBBER BASE
B-2	6" COVED BASE TO MATCH SV-1
B-3	6" COVED BASE TO MATCH SF-1
B-4	6" COVED BASE TO MATCH SF-2
B-5	6" COVED BASETO MATCH CT-1
B-6	4" VENTED BASE TO MATCH WAF-1

GENERAL NOTES:

1. SEE FINISH LEGEND FOR MATERIAL DESIGNATIONS.
2. EXTEND FLOOR FINISHES UNDER TOEKICKS, OPEN COUNTERTOPS AND EQUIPMENT, TYPICAL.
3. ALL CLOSET FINISHES SHALL MATCH THE ADJACENT ROOM UNLESS SPECIFICALLY NOTED OTHERWISE.
4. PROVIDE TRANSITION STRIPS WHERE UNLIKE MATERIALS MEET, TYPICAL.
5. WHERE FLOOR FINISH CHANGES MATERIAL, PATTERN OR COLOR AT A DOOR, LOCATE TRANSITION UNDER CENTERLINE OF DOOR.
6. STAIR 1 AND STAIR 3 FINISHES TO BE PRECAST CONCRETE TREADS WITH PERFORATED METAL RISERS, UNLESS OTHERWISE NOTED. STAIR LANDINGS TO BE PRECAST CONCRETE UNLESS OTHERWISE NOTED. ASSUME ALL STAIRS TO HAVE METAL GUARDRAIL (PAINTED HPC-X) AND WOOD HANDRAILS (WOOD WITH CLEAR FINISH). IN-FILL GUARDRAIL PANELS TO BE CUSTOM PERFORATED PANELS.
7. STAIR 2 AND STAIR 4 FINISHED TO BE COMMERCIAL QUALITY STEEL STAIRS (PAINTED HPC-X) WITH CAST IN PLACE CONCRETE TREADS, SC-1

6/15/2018 5:24:57 PM
C:\BRIC Projects\17007 SSD-MSHS_christie.sterne.rvt

BRIC ARCHITECTURE, INC.
1233 NW NORTHRUP STREET, SUITE 100
PORTLAND, OR 97209 T 503.595.4900

New Middle School / High School
Seaside School District
1801 S. FRANKLIN STREET, SEASIDE, OR 97138
t: 503-738-5591

NOT FOR CONSTRUCTION

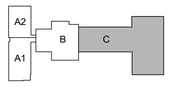

key plan

phase	BP2 PERMIT SET
date	6/15/2018
revisions	
project #	17007

FINISH FLOOR PLAN
LEVEL 1 - SECTOR C

A4.23

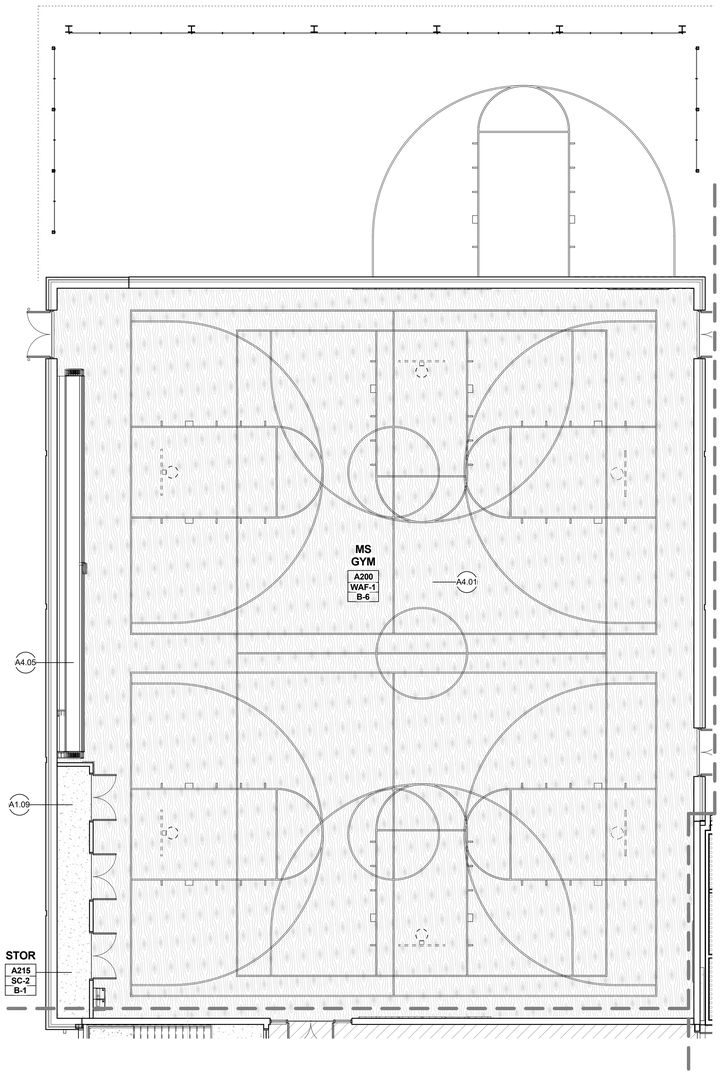

FINISH FLOOR PLAN - LEVEL 2 - SECTOR A2 (2)

SCALE: 1/8" = 1'-0"

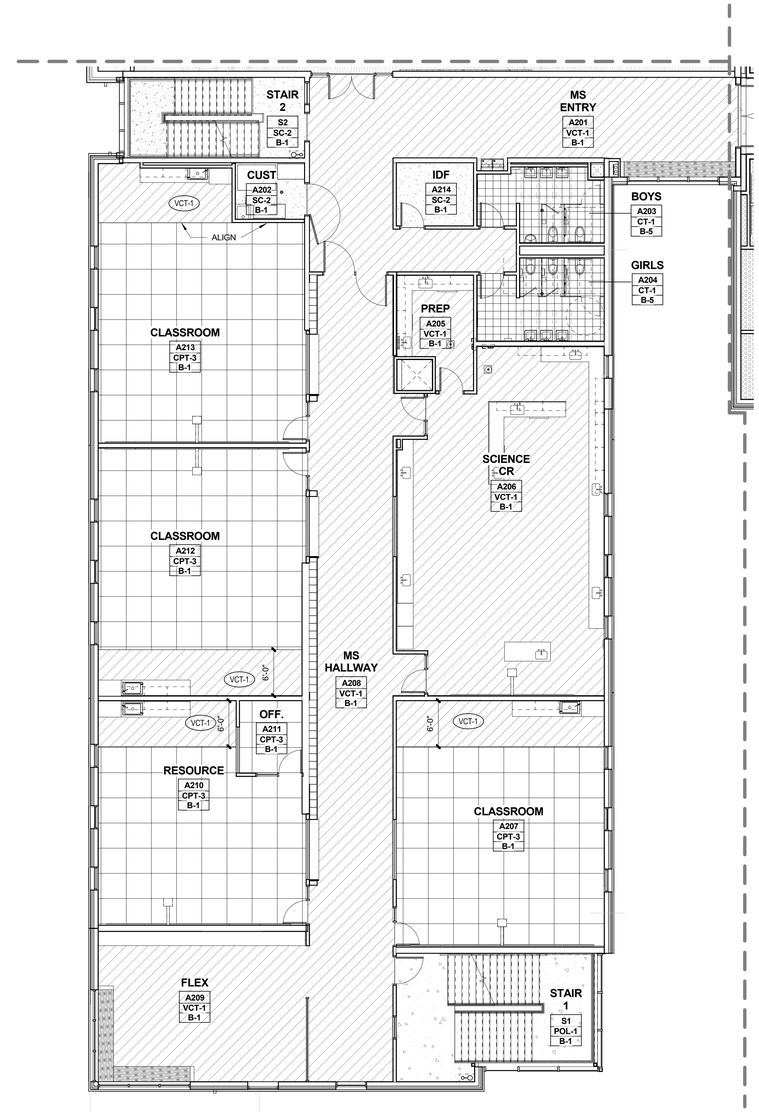

FINISH FLOOR PLAN - LEVEL 2 - SECTOR A1 (1)

SCALE: 1/8" = 1'-0"

LEGEND:

A100 — ROOM NUMBER
CPT- X — FLOOR FINISH
B-X — BASE TYPE

- CPT-1 — CARPET TILE
- CPT-2 — CARPET TILE
- CPT-3 — CARPET TILE
- EM-1 — ENTRY MAT
- VCT — VINYL COMPOSITION TILE TYPE 1-5, PATTERN TBD
- SV-1 — SHEET VINYL
- CT-1 — CERAMIC TILE
- WAF-1 — WOOD ATHLETIC FLOORING
- SC-2 — SEALED CONCRETE
- POL-1 — POLISHED CONCRETE
- SF-1 — SAFETY FLOORING (KITCHEN)
- SF-2 — SAFETY FLOORING (CULINARY)

CORNER GUARDS

ASSUME A TOTAL OF (100) STAINLESS STEEL CORNERGAURDS FOR ENTIRE BUILDING; 3"X3" LEGS, TYPICAL

B-1	4" RUBBER BASE
B-2	6" COVED BASE TO MATCH SV-1
B-3	6" COVED BASE TO MATCH SF-1
B-4	6" COVED BASE TO MATCH SF-2
B-5	6" COVED BASETO MATCH CT-1
B-6	4" VENTED BASE TO MATCH WAF-1

GENERAL NOTES:

1. SEE FINISH LEGEND FOR MATERIAL DESIGNATIONS.
2. EXTEND FLOOR FINISHES UNDER TOEKICKS, OPEN COUNTERTOPS AND EQUIPMENT, TYPICAL.
3. ALL CLOSET FINISHES SHALL MATCH THE ADJACENT ROOM UNLESS SPECIFICALLY NOTED OTHERWISE.
4. PROVIDE TRANSITION STRIPS WHERE UNLIKE MATERIALS MEET, TYPICAL.
5. WHERE FLOOR FINISH CHANGES MATERIAL, PATTERN OR COLOR AT A DOOR, LOCATE TRANSITION UNDER CENTERLINE OF DOOR.
6. STAIR 1 AND STAIR 3 FINISHES TO BE PRECAST CONCRETE TREADS WITH PERFORATED METAL RISERS, UNLESS OTHERWISE NOTED. STAIR LANDINGS TO BE PRECAST CONCRETE UNLESS OTHERWISE NOTED. ASSUME ALL STAIRS TO HAVE METAL GUARDRAIL (PAINTED HPC-X) AND WOOD HANDRAILS (WOOD WITH CLEAR FINISH). IN-FILL GUARDRAIL PANELS TO BE CUSTOM PERFORATED PANELS.
7. STAIR 2 AND STAIR 4 FINISHED TO BE COMMERCIAL QUALITY STEEL STAIRS (PAINTED HPC-X) WITH CAST IN PLACE CONCRETE TREADS, SC-1

KEYNOTES

A1.09 AREA TO RECEIVE TOPPING SCREED TO F.F.L.
A4.01 WOOD GYM FLOORING - CONFIRM DEPTH WITH MANUFACTURER
A4.05 WOOD FLOORING TO EXTEND UNDER BLEACHERS

BRIC ARCHITECTURE, INC.
1233 NW NORTHRUP STREET, SUITE 100
PORTLAND, OR 97209 T 503.595.4900

New Middle School / High School
Seaside School District
1801 S. FRANKLIN STREET, SEASIDE, OR 97138
t: 503-738-5591

NOT FOR CONSTRUCTION

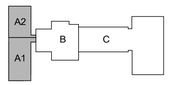

key plan

phase	BP2 PERMIT SET
date	6/15/2018
revisions	
project #	17007

FINISH FLOOR PLAN
LEVEL 2 - SECTOR A1+A2

A4.24

6/15/2018 5:25:02 PM
C:\BRIC Projects\17007 SSD-MSHS_christie.steme.rvt

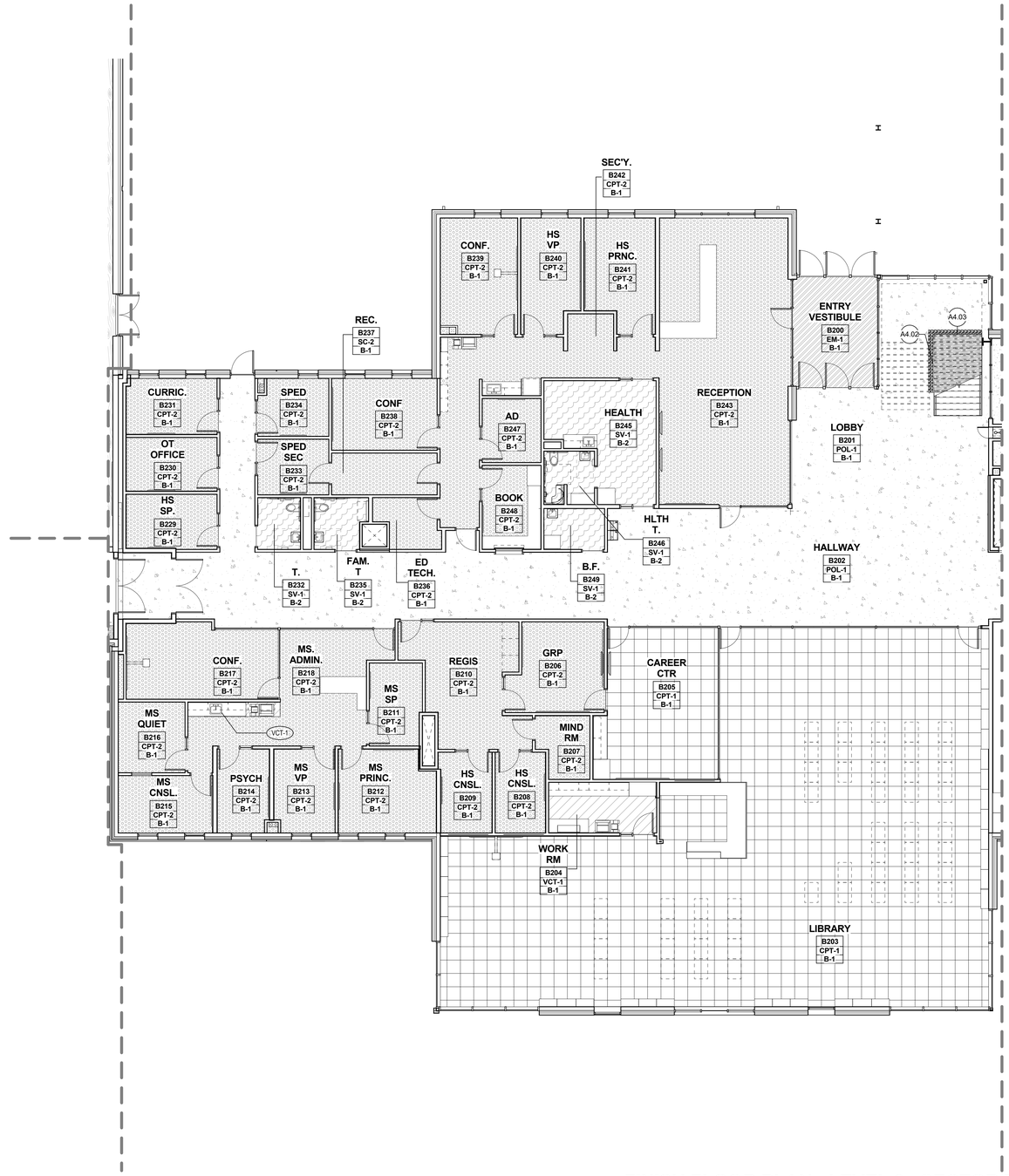

FINISH FLOOR PLAN - LEVEL 2 - SECTOR B

SCALE: 1/8" = 1'-0"

1

LEGEND:

A100 — ROOM NUMBER
CPT- X — FLOOR FINISH
B-X — BASE TYPE

CPT-1	CARPET TILE
CPT-2	CARPET TILE
CPT-3	CARPET TILE
EM-1	ENTRY MAT
VCT	VINYL COMPOSITION TILE TYPE 1-5, PATTERN TBD
SV-1	SHEET VINYL
CT-1	CERAMIC TILE
WAF-1	WOOD ATHLETIC FLOORING
SC-2	SEALED CONCRETE
POL-1	POLISHED CONCRETE
SF-1	SAFETY FLOORING (KITCHEN)
SF-2	SAFETY FLOORING (CULINARY)

CORNER GUARDS

ASSUME A TOTAL OF (100) STAINLESS STEEL CORNERGAURDS FOR ENTIRE BUILDING; 3"X3" LEGS, TYPICAL

B-1	4" RUBBER BASE
B-2	6" COVED BASE TO MATCH SV-1
B-3	6" COVED BASE TO MATCH SF-1
B-4	6" COVED BASE TO MATCH SF-2
B-5	6" COVED BASETO MATCH CT-1
B-6	4" VENTED BASE TO MATCH WAF-1

GENERAL NOTES:

1. SEE FINISH LEGEND FOR MATERIAL DESIGNATIONS.
2. EXTEND FLOOR FINISHES UNDER TOEKICKS, OPEN COUNTERTOPS AND EQUIPMENT, TYPICAL.
3. ALL CLOSET FINISHES SHALL MATCH THE ADJACENT ROOM UNLESS SPECIFICALLY NOTED OTHERWISE.
4. PROVIDE TRANSITION STRIPS WHERE UNLIKE MATERIALS MEET, TYPICAL.
5. WHERE FLOOR FINISH CHANGES MATERIAL, PATTERN OR COLOR AT A DOOR, LOCATE TRANSITION UNDER CENTERLINE OF DOOR.
6. STAIR 1 AND STAIR 3 FINISHES TO BE PRECAST CONCRETE TREADS WITH PERFORATED METAL RISERS, UNLESS OTHERWISE NOTED. STAIR LANDINGS TO BE PRECAST CONCRETE UNLESS OTHERWISE NOTED. ASSUME ALL STAIRS TO HAVE METAL GUARDRAIL (PAINTED HPC-X) AND WOOD HANDRAILS (WOOD WITH CLEAR FINISH). IN-FILL GUARDRAIL PANELS TO BE CUSTOM PERFORATED PANELS.
7. STAIR 2 AND STAIR 4 FINISHED TO BE COMMERCIAL QUALITY STEEL STAIRS (PAINTED HPC-X) WITH CAST IN PLACE CONCRETE TREADS, SC-1

KEYNOTES

A4.02 BUTCHER BLOCK WOOD SLATTED BENCH
A4.03 PEBBLE TILE BORDER (CT-9)

6/15/2018 5:25:07 PM
C:\BRIC Projects\17007 SSD-MSHS_christie.sterne.rvt

BRIC ARCHITECTURE, INC.
1233 NW NORTHRUP STREET, SUITE 100
PORTLAND, OR 97209 T 503.595.4900

New Middle School / High School
Seaside School District
1801 S. FRANKLIN STREET, SEASIDE, OR 97138
t: 503-738-5591

NOT FOR CONSTRUCTION

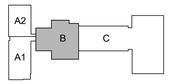

key plan

phase	BP2 PERMIT SET
date	6/15/2018
revisions	
project #	17007

FINISH FLOOR PLAN
LEVEL 2 - SECTOR B

A4.25

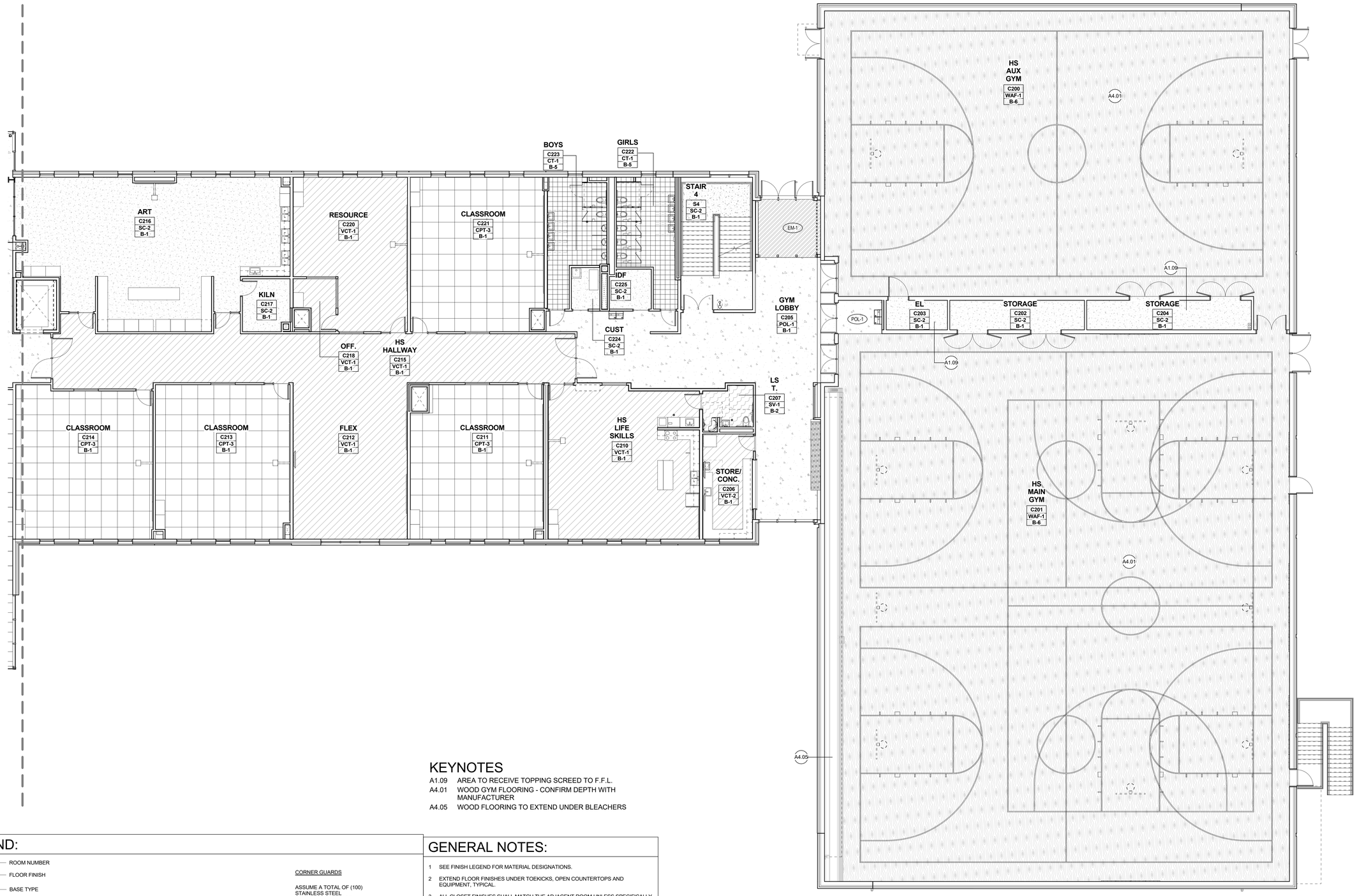

KEYNOTES

A1.09 AREA TO RECEIVE TOPPING SCREED TO F.F.L.

A4.01 WOOD GYM FLOORING - CONFIRM DEPTH WITH MANUFACTURER

A4.05 WOOD FLOORING TO EXTEND UNDER BLEACHERS

LEGEND:

A100 — ROOM NUMBER
CPT- X — FLOOR FINISH
B-X — BASE TYPE

- CPT-1 CARPET TILE
- CPT-2 CARPET TILE
- CPT-3 CARPET TILE
- EM-1 ENTRY MAT
- VCT VINYL COMPOSITION TILE TYPE 1-5, PATTERN TBD
- SV-1 SHEET VINYL
- CT-1 CERAMIC TILE
- WAF-1 WOOD ATHLETIC FLOORING
- SC-2 SEALED CONCRETE
- POL-1 POLISHED CONCRETE
- SF-1 SAFETY FLOORING (KITCHEN)
- SF-2 SAFETY FLOORING (CULINARY)

CORNER GUARDS

ASSUME A TOTAL OF (100) STAINLESS STEEL CORNERGAURDS FOR ENTIRE BUILDING; 3"X3" LEGS, TYPICAL

B-1	4" RUBBER BASE
B-2	6" COVED BASE TO MATCH SV-1
B-3	6" COVED BASE TO MATCH SF-1
B-4	6" COVED BASE TO MATCH SF-2
B-5	6" COVED BASETO MATCH CT-1
B-6	4" VENTED BASE TO MATCH WAF-1

GENERAL NOTES:

1 SEE FINISH LEGEND FOR MATERIAL DESIGNATIONS.

2 EXTEND FLOOR FINISHES UNDER TOEKICKS, OPEN COUNTERTOPS AND EQUIPMENT, TYPICAL.

3 ALL CLOSET FINISHES SHALL MATCH THE ADJACENT ROOM UNLESS SPECIFICALLY NOTED OTHERWISE.

4 PROVIDE TRANSITION STRIPS WHERE UNLIKE MATERIALS MEET, TYPICAL.

5 WHERE FLOOR FINISH CHANGES MATERIAL, PATTERN OR COLOR AT A DOOR, LOCATE TRANSITION UNDER CENTERLINE OF DOOR.

6 STAIR 1 AND STAIR 3 FINISHES TO BE PRECAST CONCRETE TREADS WITH PERFORATED METAL RISERS, UNLESS OTHERWISE NOTED. STAIR LANDINGS TO BE PRECAST CONCRETE UNLESS OTHERWISE NOTED. ASSUME ALL STAIRS TO HAVE METAL GUARDRAIL (PAINTED HPC-X) AND WOOD HANDRAILS (WOOD WITH CLEAR FINISH). IN-FILL GUARDRAIL PANELS TO BE CUSTOM PERFORATED PANELS.

7 STAIR 2 AND STAIR 4 FINISHED TO BE COMMERCIAL QUALITY STEEL STAIRS (PAINTED HPC-X) WITH CAST IN PLACE CONCRETE TREADS, SC-1

FINISH FLOOR PLAN - LEVEL 2 - SECTOR C (1)

SCALE: 1/8" = 1'-0"

6/15/2018 5:25:13 PM
C:\BRIC Projects\17007 SSD-MSHS_christie.sterne.rvt

BRIC ARCHITECTURE, INC.
1233 NW NORTHRUP STREET, SUITE 100
PORTLAND, OR 97209 T 503.595.4900

New Middle School / High School
Seaside School District
1801 S. FRANKLIN STREET, SEASIDE, OR 97138
t: 503-738-5591

NOT FOR CONSTRUCTION

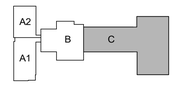

key plan

phase	BP2 PERMIT SET
date	6/15/2018
revisions	
project #	17007

FINISH FLOOR PLAN
LEVEL 2 - SECTOR C

A4.26

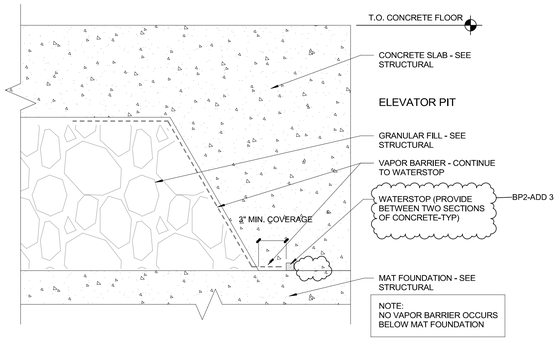

FOUNDATION AT T.O. ELEVATOR PIT (16)

SCALE: 3" = 1'-0"

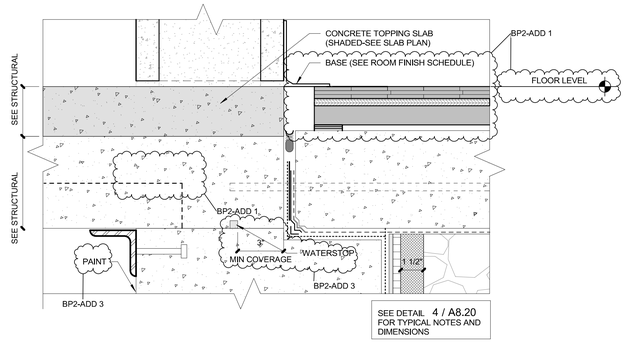

FOUNDATION AT WP2-HS GYM (8)

SCALE: 3" = 1'-0"

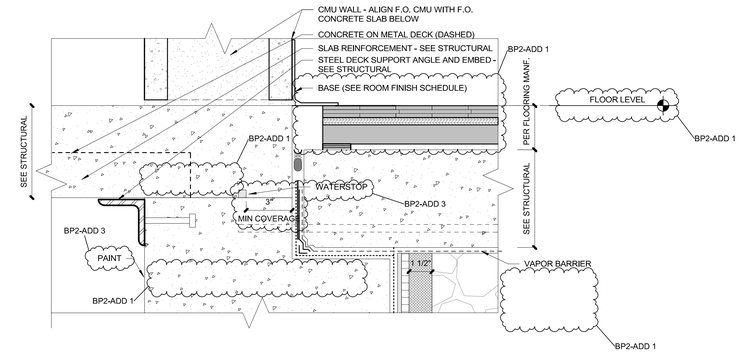

FOUNDATION AT WP2-MS GYM (4)

SCALE: 3" = 1'-0"

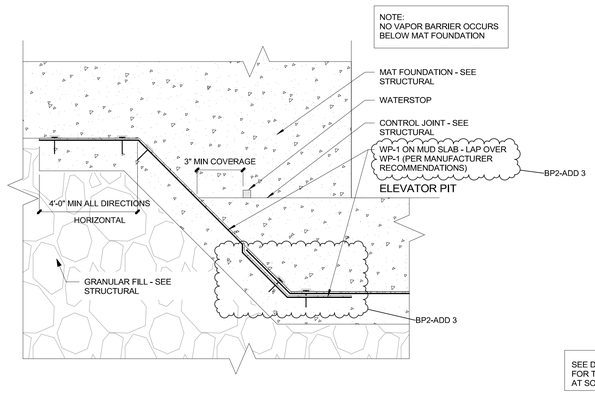

FOUNDATION AT B.O. ELEVATOR PIT (15)

SCALE: 3" = 1'-0"

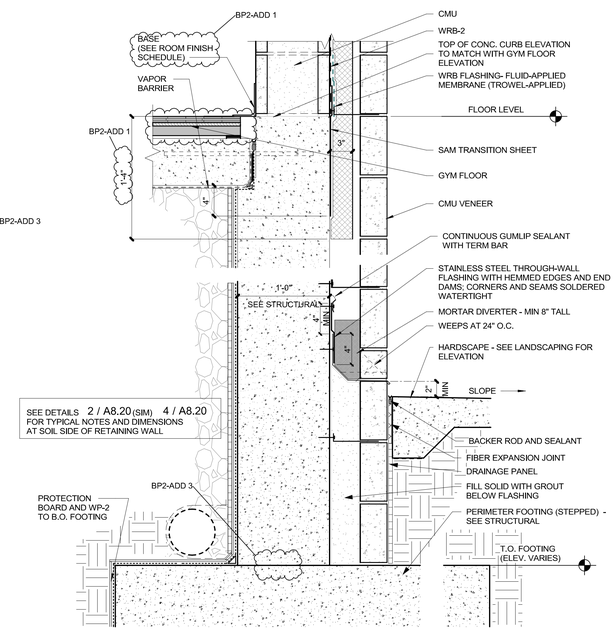

FOUNDATION (STEPPED) AT SOIL (6)

SCALE:1 1/2" = 1'-0"

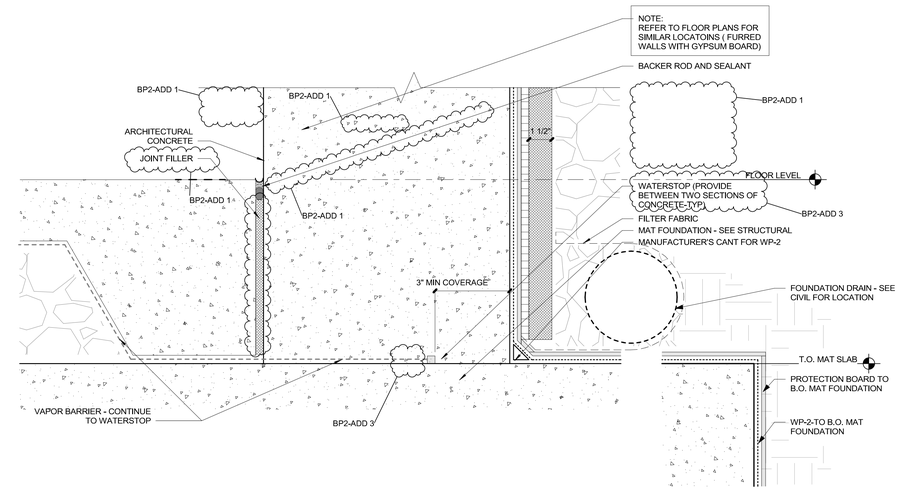

FOUNDATION AT WP2-B.O.WALL (2)

SCALE: 3" = 1'-0"

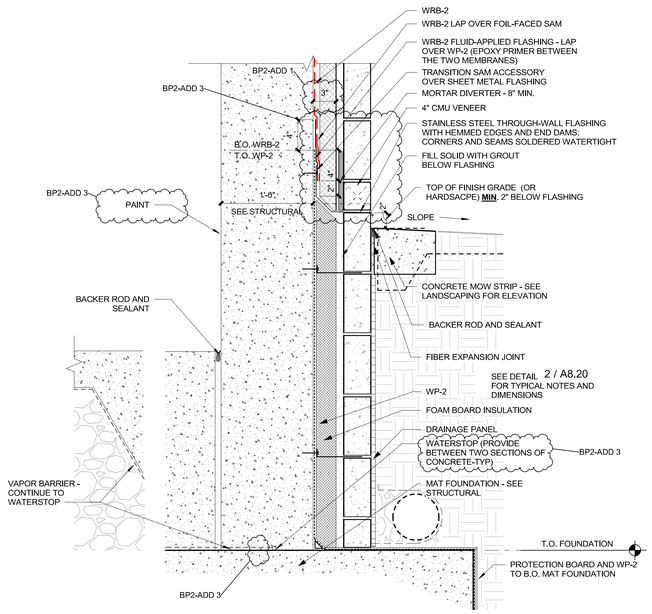

FOUNDATION AT HABITATED SPACE (5)

SCALE:1 1/2" = 1'-0"

BRIC ARCHITECTURE, INC.
1233 NW NORTHRUP STREET, SUITE 100
PORTLAND, OR 97209 T 503.595.4900

New Middle School / High School
Seaside School District
1801 S. FRANKLIN STREET, SEASIDE, OR 97138
t: 503-738-5591

REGISTERED ARCHITECT
3473
DANIEL J. HESS
PORTLAND, OREGON
STATE OF OREGON

Digitally signed by Daniel J. Hess
DN: C=US, O=BRIC Architecture, Inc., CN=Daniel J. Hess, E=dhess@bric-arch.com
Date: 2018.07.16 17:16:19 -08'00'
Daniel J. Hess

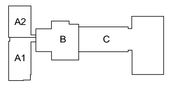

key plan

package	BP2-PERMIT SET
issue date	06/15/2018
revisions	
07/05/2018	BP2-ADD 1
07/16/2018	BP2-ADD 3
project #	17007

FOUNDATION DETAILS

A8.20

7/16/2018 1:32:45 PM
C:\BRIC Projects\17007 SSD-MSHS_christie.sterne.rvt

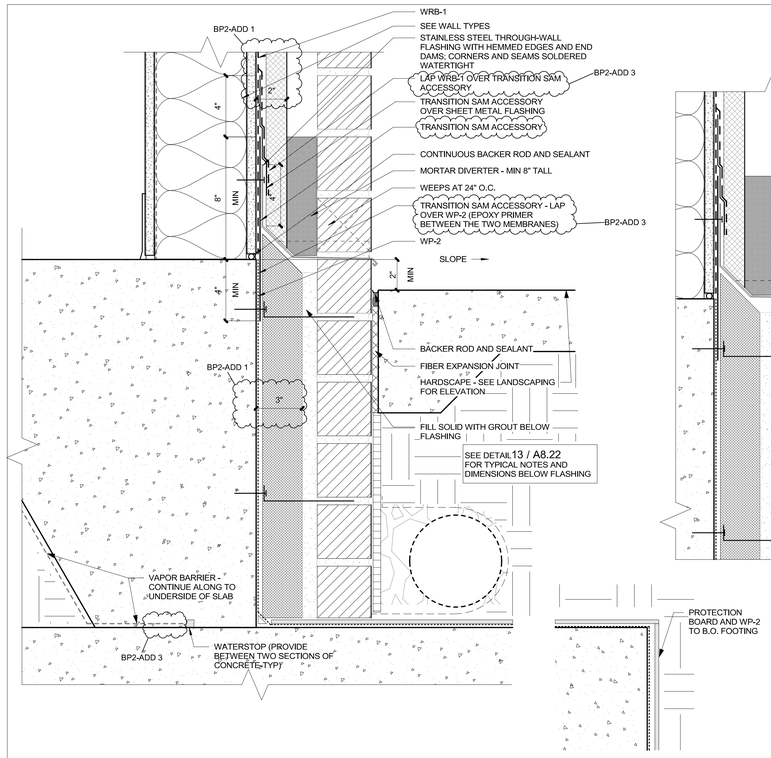

BRICK RECESS AT HARDSCAPE 16
SCALE: 3" = 1'-0"

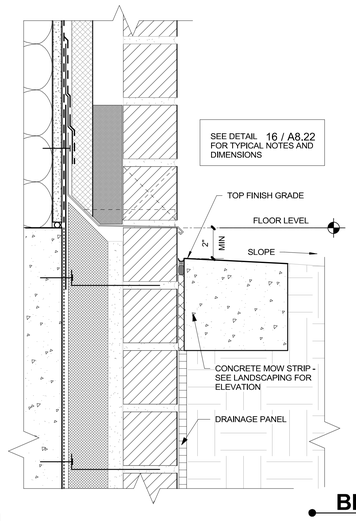

BRICK RECESS AT GRADE 12
SCALE: 3" = 1'-0"

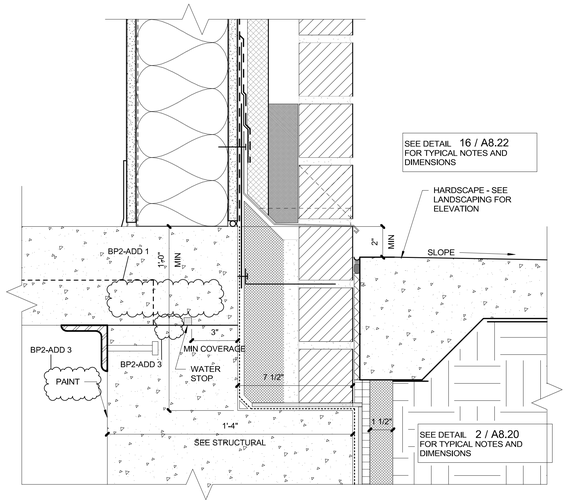

BRICK RECESS AT HARDSCAPE/RETAINING WALL 8
SCALE: 3" = 1'-0"

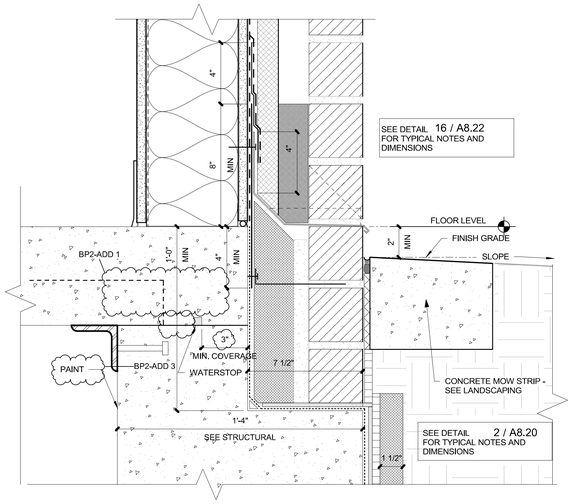

BRICK RECESS AT GRADE/RETAINING WALL 4
SCALE: 3" = 1'-0"

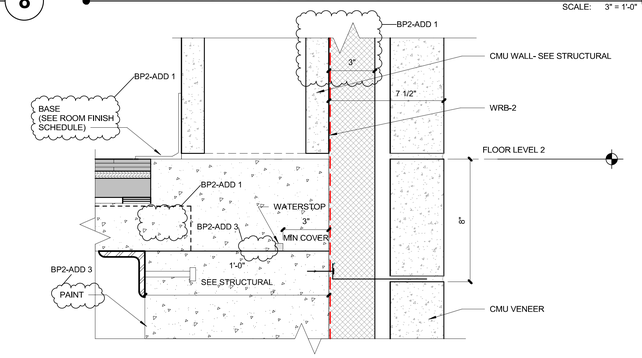

CMU VENEER AT RETAINING WALL 3
SCALE: 3" = 1'-0"

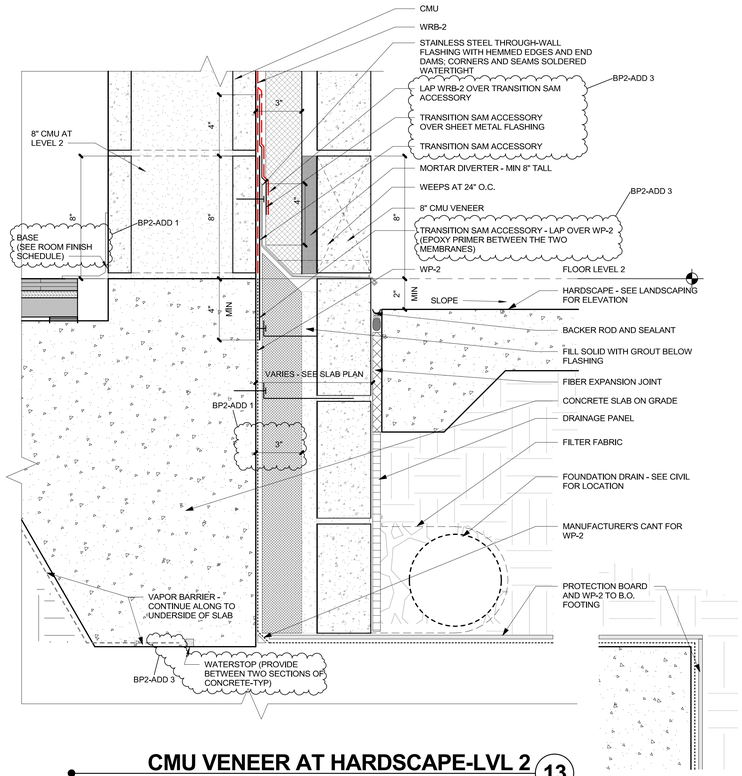

CMU VENEER AT HARDSCAPE-LVL 2 13
SCALE: 3" = 1'-0"

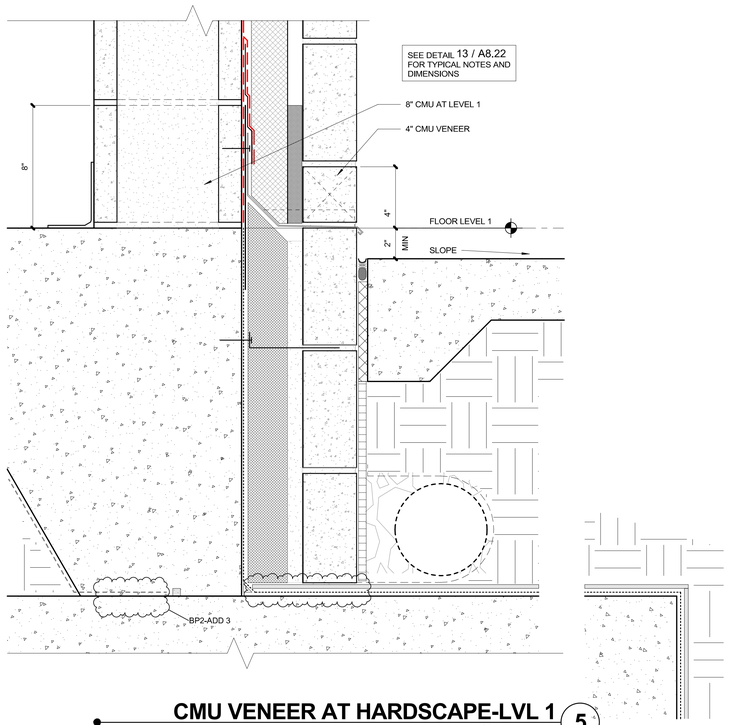

CMU VENEER AT HARDSCAPE-LVL 1 5
SCALE: 3" = 1'-0"

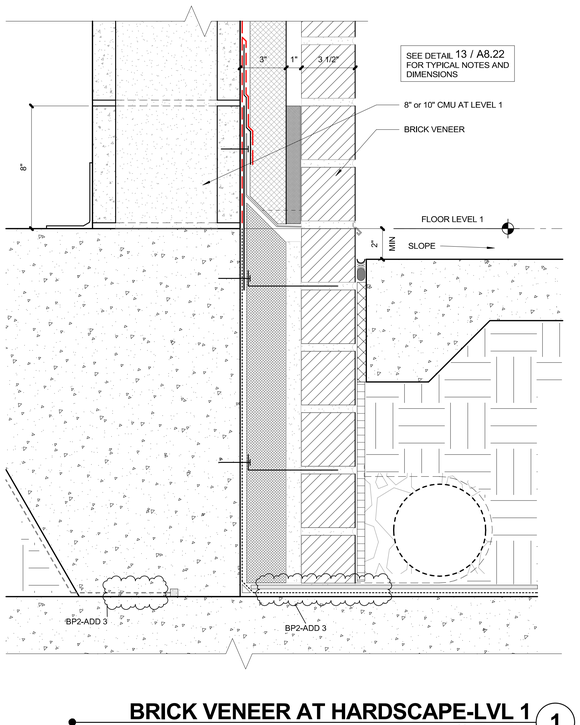

BRICK VENEER AT HARDSCAPE-LVL 1 1
SCALE: 3" = 1'-0"

BRIC ARCHITECTURE, INC.
1233 NW NORTHRUP STREET, SUITE 100
PORTLAND, OR 97209 T 503.595.4900

New Middle School / High School
Seaside School District
1801 S. FRANKLIN STREET, SEASIDE, OR 97138
t: 503-738-5591

REGISTERED ARCHITECT 3473 DANIEL J. HESS PORTLAND, OREGON STATE OF OREGON

Digitally signed by Daniel J. Hess
DN: C=US, O=BRIC Architecture Inc., CN=Daniel J. Hess, E=dhess@bric.com
Date: 2018.07.16 13:32:00 -08'00'
Daniel J. Hess

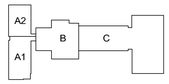

key plan

package	BP2-PERMIT SET
issue date	06/15/2018
revisions	
07/05/2018	BP2-ADD 1
07/16/2018	BP2-ADD 3

project # 17007

FOUNDATION DETAILS

A8.22

7/16/2018 1:32:46 PM
C:\BRIC Projects\17007 SSD-MSHS_christie.sterne.rvt

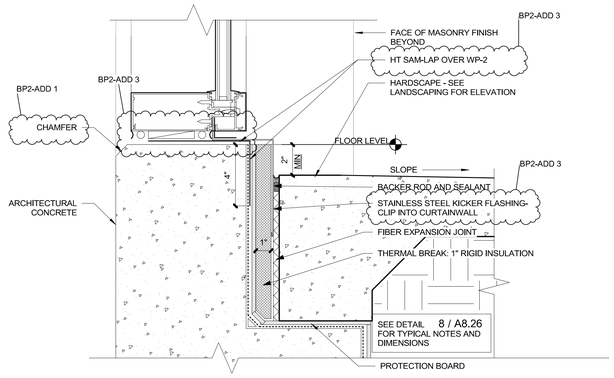

CURTAINWALL SILL AT STAIR 4 (8)

SCALE: 3" = 1'-0"

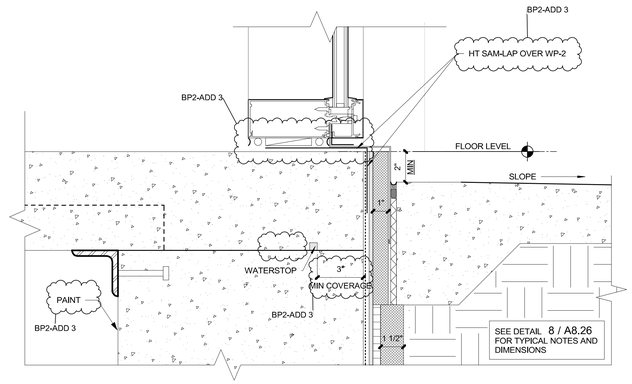

CURTAINWALL SILL AT RETAINING WALL/HARDSCAPE (4)

SCALE: 3" = 1'-0"

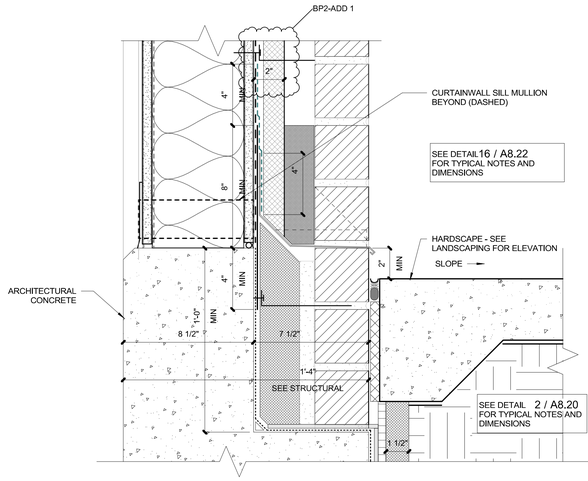

BRICK RECESS AT STAIR 4 (7)

SCALE: 3" = 1'-0"

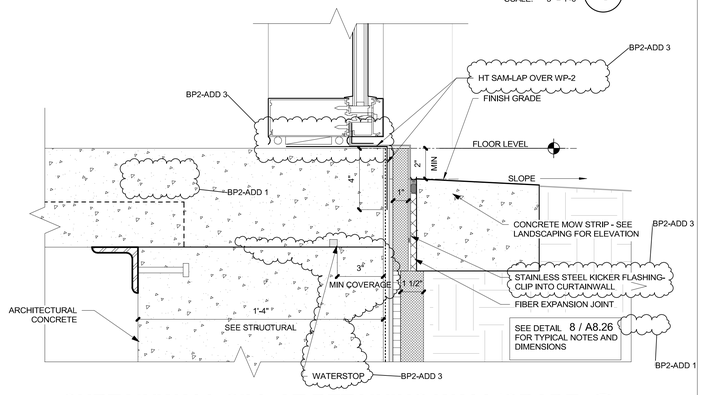

CURTAINWALL SILL AT RETAINING WALL/GRADE (3)

SCALE: 3" = 1'-0"

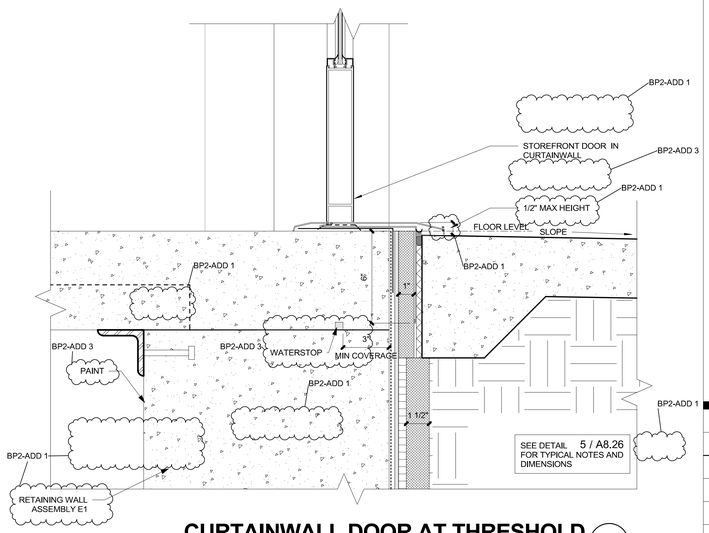

CURTAINWALL DOOR AT THRESHOLD (2)

SCALE: 3" = 1'-0"

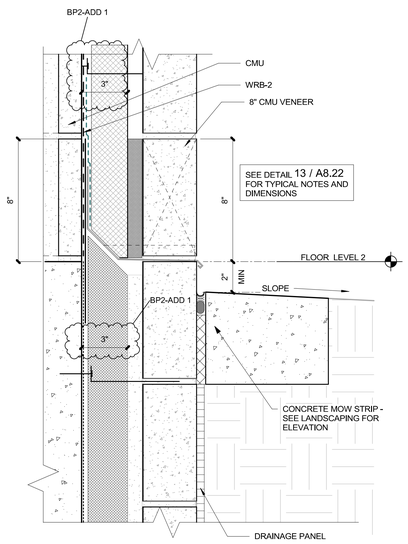

CMU VENEER AT GRADE-LVL 2 (9)

SCALE: 3" = 1'-0"

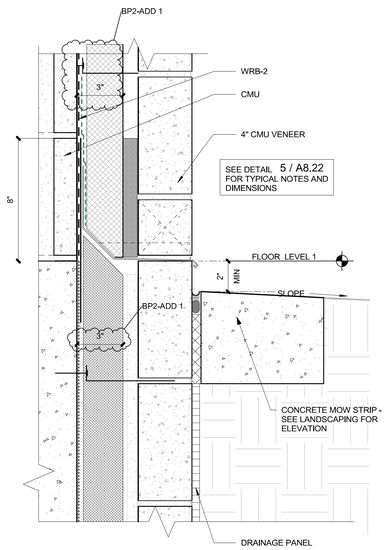

CMU VENEER AT GRADE-LVL 1 (5)

SCALE: 3" = 1'-0"

BRIC ARCHITECTURE, INC.
1233 NW NORTHRUP STREET, SUITE 100
PORTLAND, OR 97209 T 503.595.4900

New Middle School / High School

Seaside School District

1801 S. FRANKLIN STREET, SEASIDE, OR 97138

t: 503-738-5591

REGISTERED ARCHITECT 3473 DANIEL J. HESS PORTLAND, OREGON STATE OF OREGON

Daniel J. Hess

Digitally signed by Daniel J. Hess
DN: C=US, O=BRIC Architecture and Interiors, Inc., CN=Daniel J. Hess, E=dhess@bric.com
Date: 2018.07.16 15:54:12-07'00'

A2 A1 B C

key plan

package	BP2-PERMIT SET
issue date	06/15/2018
revisions	
07/05/2018	BP2-ADD 1
07/16/2018	BP2-ADD 3
project #	17007

FOUNDATION DETAILS

A8.24

7/16/2018 1:32:47 PM
C:\BRIC Projects\17007 SSD-MSHS_christie.sterne.rvt

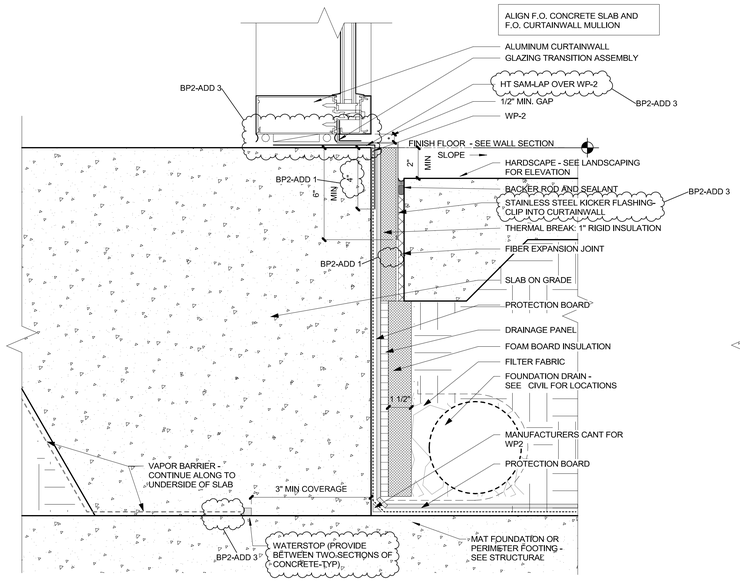

CURTAINWALL SILL AT HARDSCAPE 8

SCALE: 3" = 1'-0"

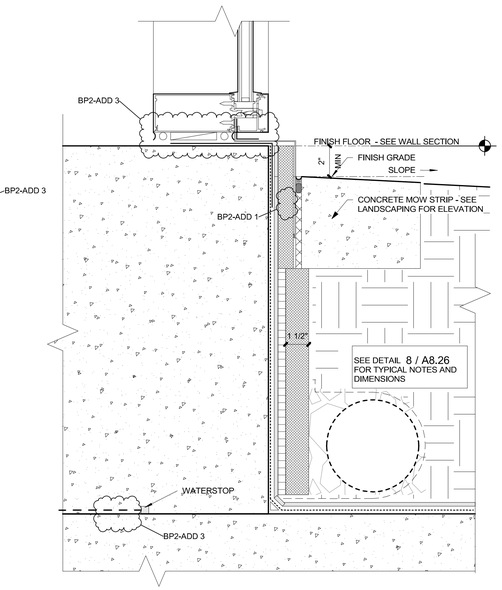

CURTAINWALL SILL AT GRADE 4

SCALE: 3" = 1'-0"

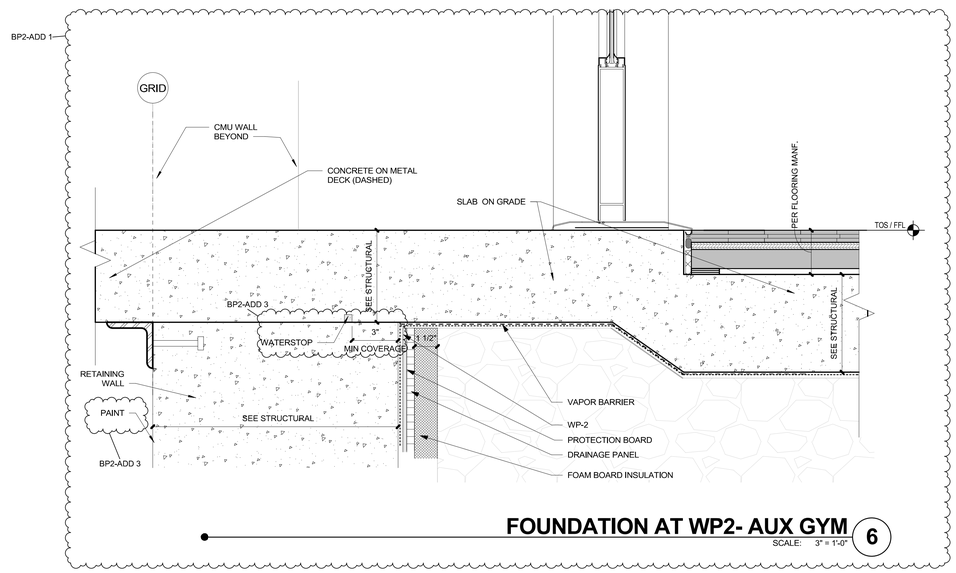

FOUNDATION AT WP2- AUX GYM 6

SCALE: 3" = 1'-0"

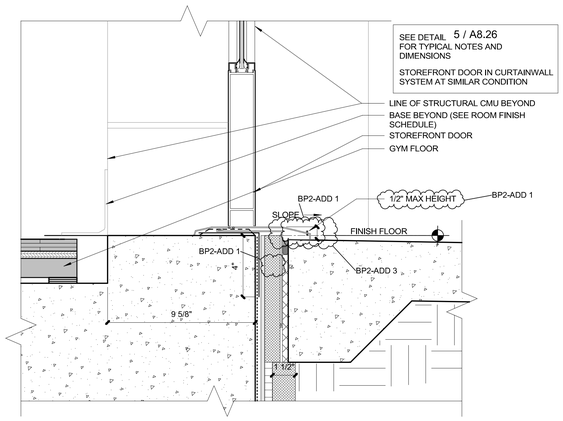

STOREFRONT DOOR AT GYM THRESHOLD 2

SCALE: 3" = 1'-0"

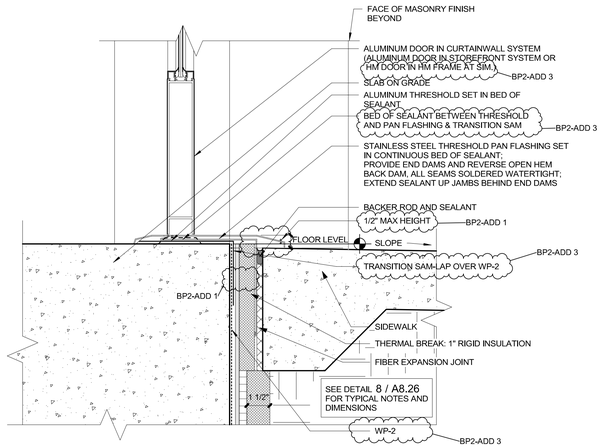

STOREFRONT DOOR (CW) AT THRESHOLD 5

SCALE: 3" = 1'-0"

BP2-ADD 1

BRIC ARCHITECTURE, INC.
1233 NW NORTHRUP STREET, SUITE 100
PORTLAND, OR 97209 T 503.595.4900

New Middle School / High School

Seaside School District

1801 S. FRANKLIN STREET, SEASIDE, OR 97138

t: 503-738-5591

REGISTERED ARCHITECT 3473 DANIEL J. HESS PORTLAND, OREGON STATE OF OREGON

Digitally signed by Daniel J. Hess
DN: C=US, O=BRIC ARCHITECTURE, INC., CN=Daniel J. Hess, E=dhess@bric-arch.com
Date: 2018.07.16 12:01:00 -07'00'

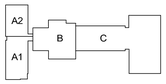

key plan

package	BP2-PERMIT SET
issue date	06/15/2018
revisions	
07/05/2018	BP2-ADD 1
07/16/2018	BP2-ADD 3
project #	17007

FOUNDATION DETAILS

A8.26

7/16/2018 1:32:48 PM
C:\BRIC Projects\17007 SSD-MSHS_christie.sterne.rvt

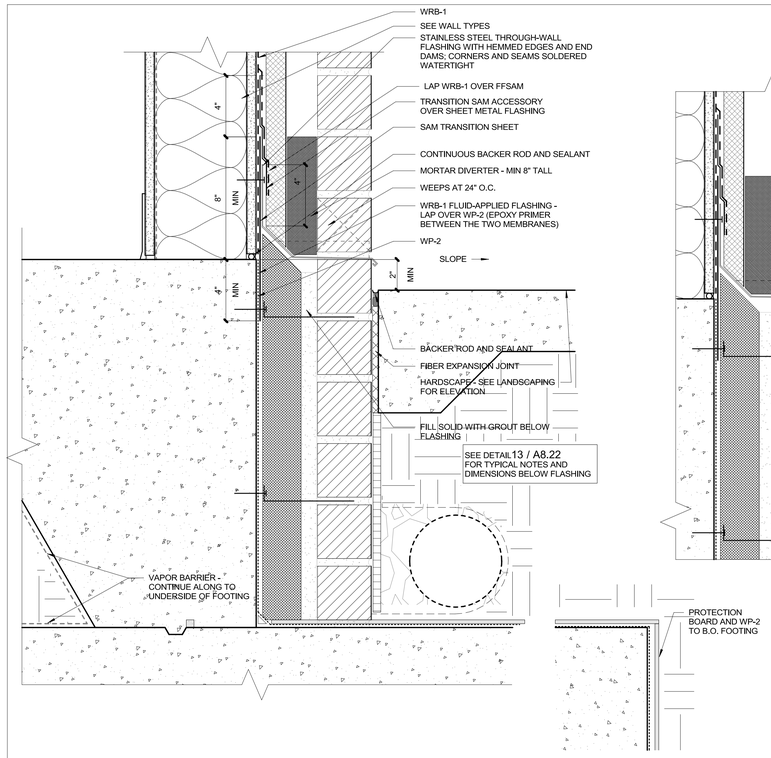

BRICK RECESS AT HARDSCAPE 16

SCALE: 3" = 1'-0"

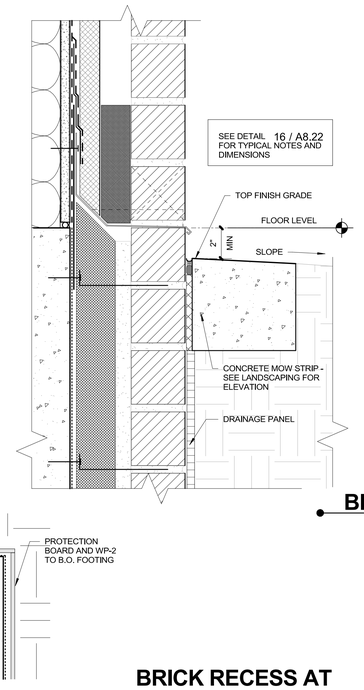

BRICK RECESS AT GRADE 12

SCALE: 3" = 1'-0"

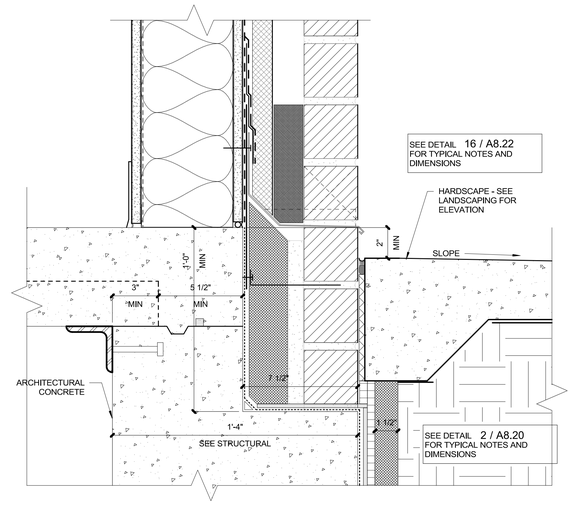

BRICK RECESS AT HARDSCAPE/RETAINING WALL 8

SCALE: 3" = 1'-0"

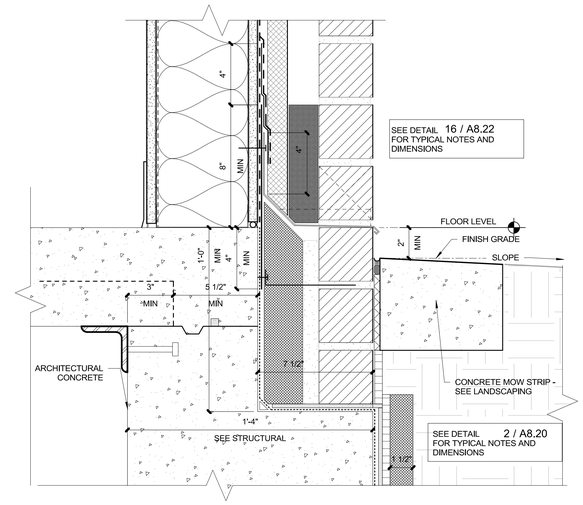

BRICK RECESS AT GRADE/RETAINING WALL 4

SCALE: 3" = 1'-0"

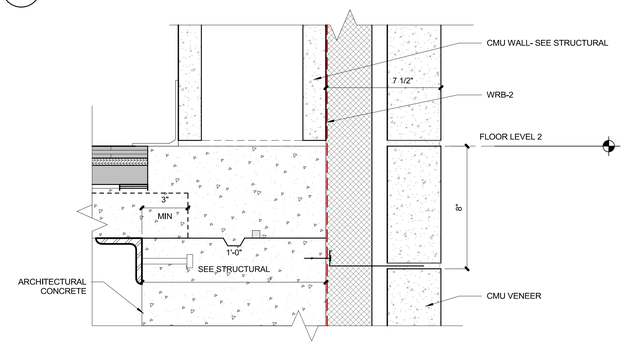

CMU VENEER AT RETAINING WALL 3

SCALE: 3" = 1'-0"

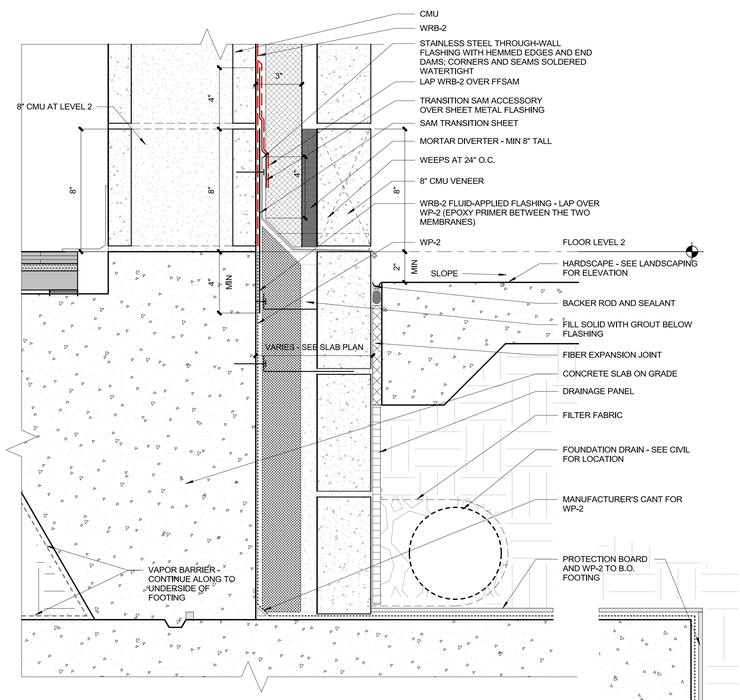

CMU VENEER AT HARDSCAPE-LVL 2 13

SCALE: 3" = 1'-0"

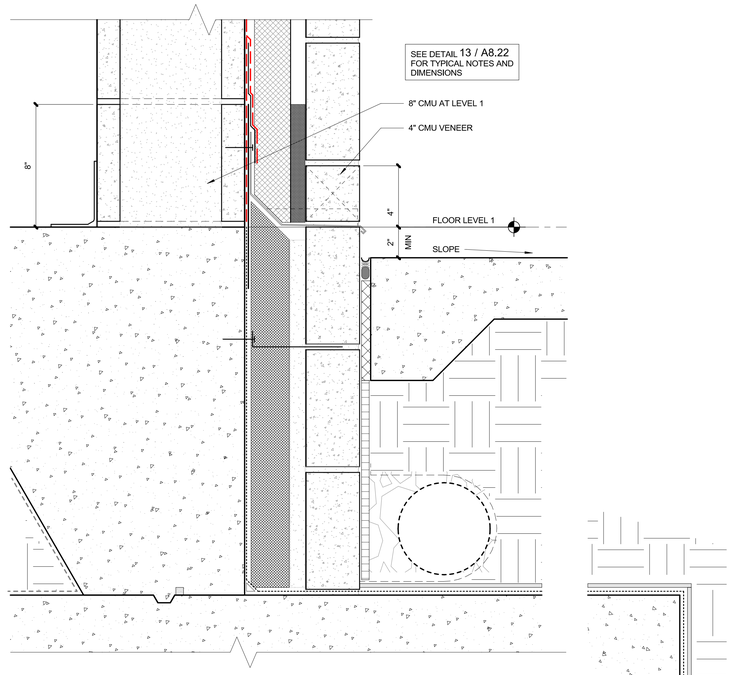

CMU VENEER AT HARDSCAPE-LVL 1 5

SCALE: 3" = 1'-0"

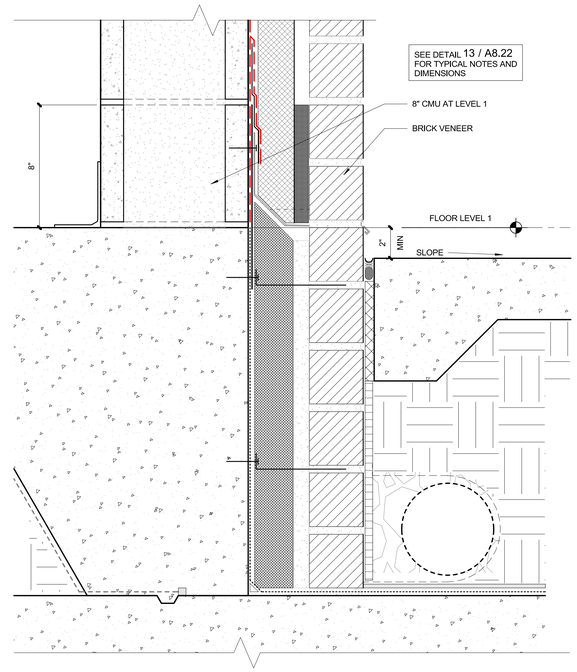

BRICK VENEER AT HARDSCAPE-LVL 1 1

SCALE: 3" = 1'-0"

BRIC ARCHITECTURE, INC.
1233 NW NORTHRUP STREET, SUITE 100
PORTLAND, OR 97209 T 503.595.4900

New Middle School / High School

Seaside School District

1801 S. FRANKLIN STREET, SEASIDE, OR 97138

t: 503-738-5591

REGISTERED ARCHITECT 3473 DANIEL J. HESS PORTLAND, OREGON STATE OF OREGON

Daniel J. Hess

key plan

phase	BP2 PERMIT SET
date	6/15/2018
revisions	
project #	17007

FOUNDATION DETAILS

A8.22

6/15/2018 3:31:34 PM
C:\BRIC Projects\17007 SSD-MSHS_christie.sterne.rvt

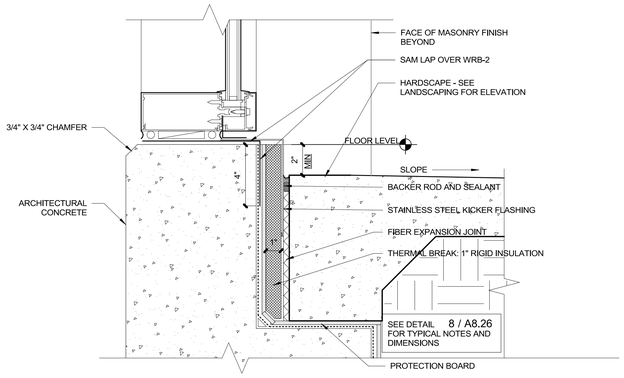

CURTAINWALL SILL AT STAIR 4 (8)

SCALE: 3" = 1'-0"

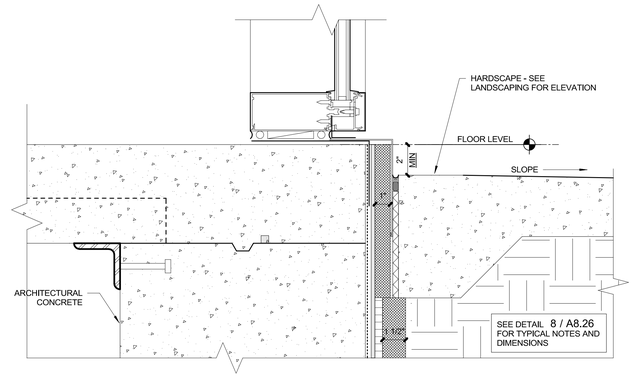

CURTAINWALL SILL AT RETAINING WALL/HARDSCAPE (4)

SCALE: 3" = 1'-0"

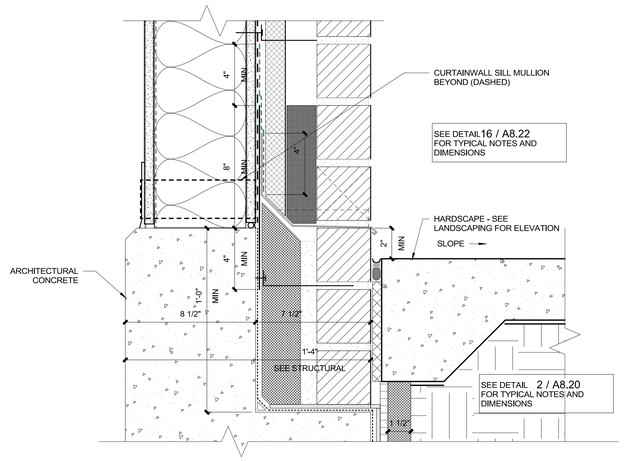

BRICK RECESS AT STAIR 4 (7)

SCALE: 3" = 1'-0"

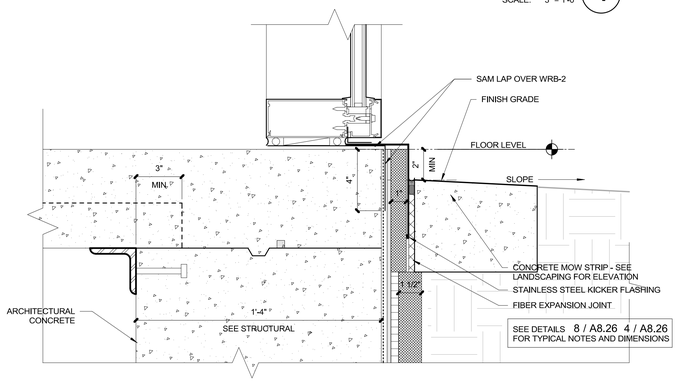

CURTAINWALL SILL AT RETAINING WALL/GRADE (3)

SCALE: 3" = 1'-0"

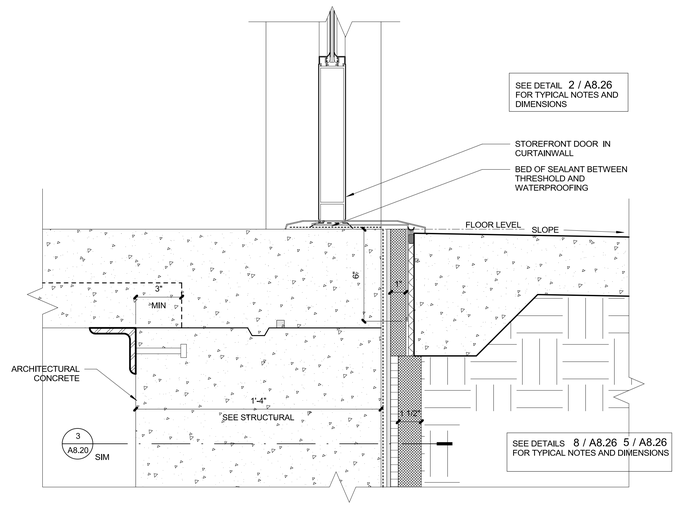

CURTAINWALL DOOR AT THRESHOLD (2)

SCALE: 3" = 1'-0"

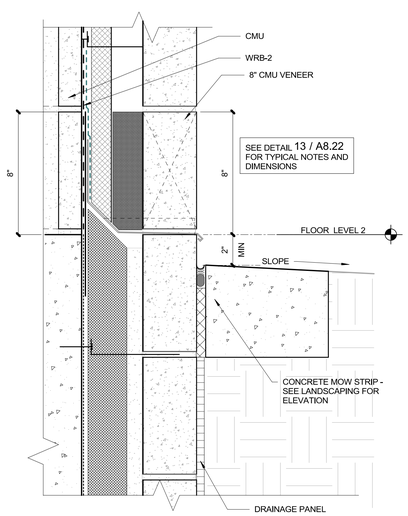

CMU VENEER AT GRADE-LVL 2 (9)

SCALE: 3" = 1'-0"

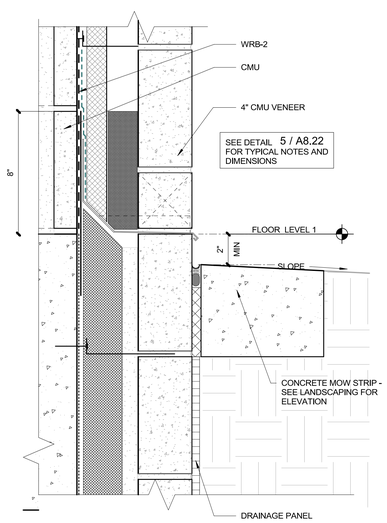

CMU VENEER AT GRADE-LVL 1 (5)

SCALE: 3" = 1'-0"

BR|IC ARCHITECTURE, INC.
1233 NW NORTHRUP STREET, SUITE 100
PORTLAND, OR 97209 T 503.595.4900

New Middle School / High School

Seaside School District

1801 S. FRANKLIN STREET, SEASIDE, OR 97138

t: 503-738-5591

REGISTERED ARCHITECT 3473 DANIEL J. HESS PORTLAND, OREGON STATE OF OREGON

Daniel J. Hess

key plan

phase	BP2 PERMIT SET
date	6/15/2018
revisions	
project #	17007

FOUNDATION DETAILS

A8.24

6/15/2018 3:31:37 PM
C:\BRIC Projects\17007 SSD-MSHS_christie.sterne.rvt

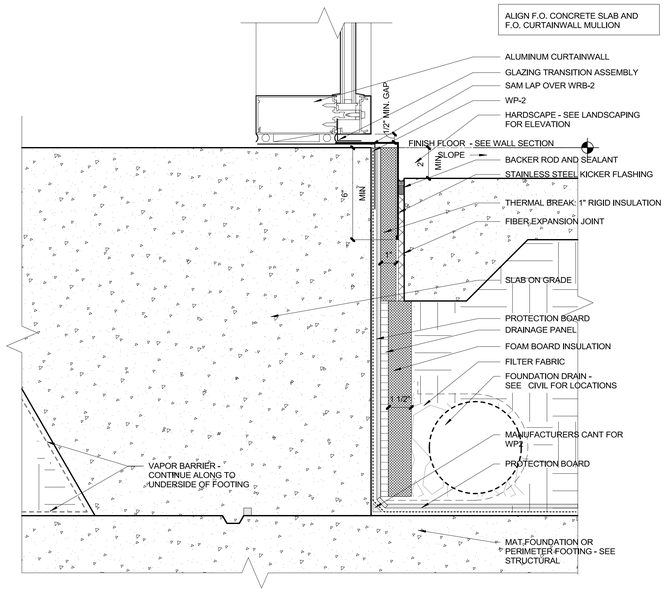

CURTAINWALL SILL AT HARDSCAPE 8

SCALE: 3" = 1'-0"

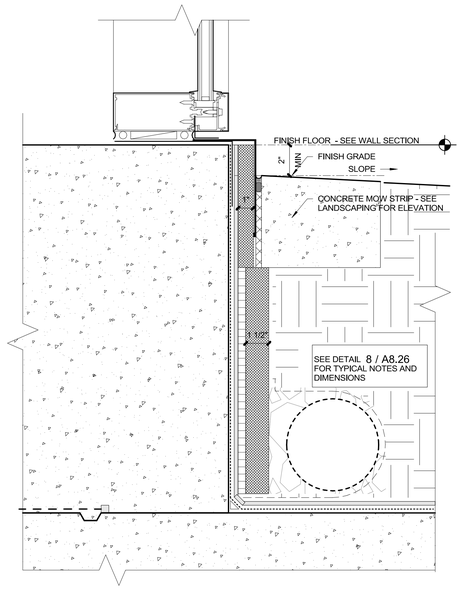

CURTAINWALL SILL AT GRADE 4

SCALE: 3" = 1'-0"

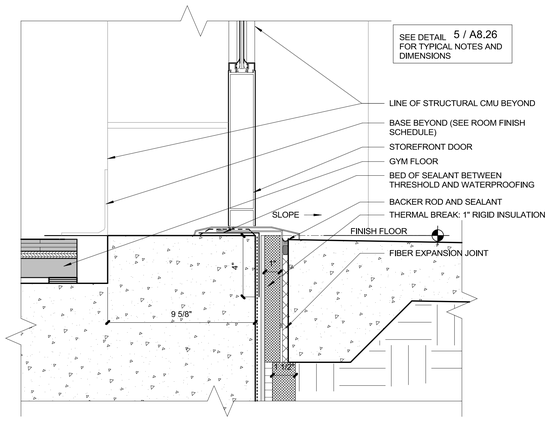

STOREFRONT DOOR AT GYM THRESHOLD 2

SCALE: 3" = 1'-0"

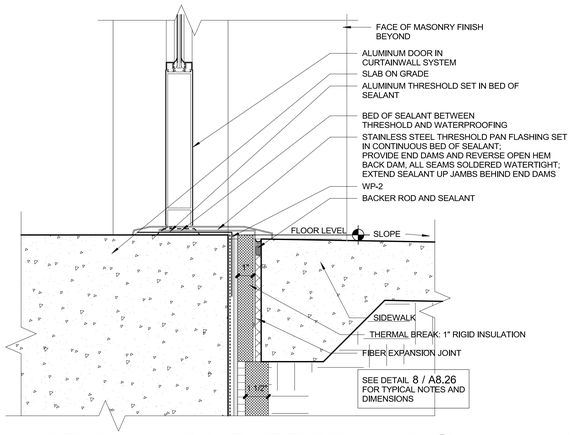

CURTAINWALL DOOR AT THRESHOLD 5

SCALE: 3" = 1'-0"

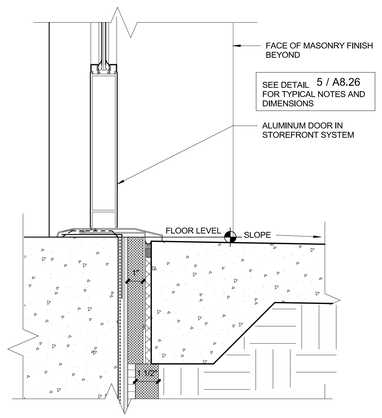

STOREFRONT DOOR AT THRESHOLD 1

SCALE: 3" = 1'-0"

BR|IC ARCHITECTURE, INC.
1233 NW NORTHRUP STREET, SUITE 100
PORTLAND, OR 97209 T 503 595 4900

New Middle School / High School

Seaside School District

1801 S. FRANKLIN STREET, SEASIDE, OR 97138

t: 503-738-5591

REGISTERED ARCHITECT 3473 DANIEL J. HESS PORTLAND, OREGON STATE OF OREGON

Daniel J. Hess

key plan

phase	BP2 PERMIT SET
date	6/15/2018
revisions	
project #	17007

FOUNDATION DETAILS

A8.26

6/15/2018 3:31:40 PM
C:\BRIC Projects\17007 SSD-MSHS_christie.sterne.rvt

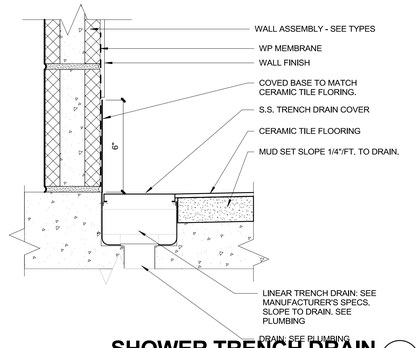

SHOWER TRENCH DRAIN 3

SCALE: 3" = 1'-0"

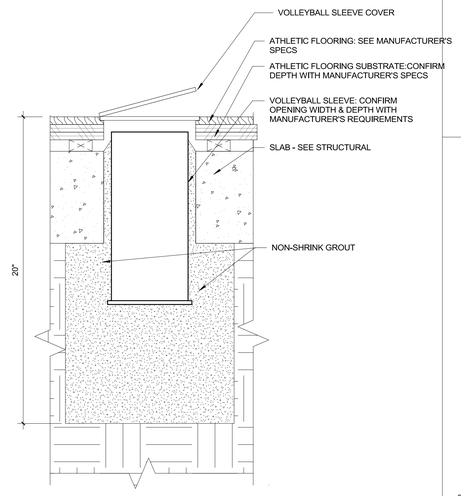

FLOOR SLEEVE FOR VOLLEYBALL 2

SCALE: 3" = 1'-0"

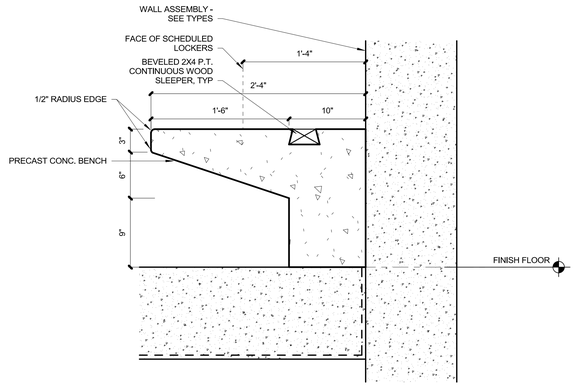

TEAM ROOM BENCHES 5

SCALE:1 1/2" = 1'-0"

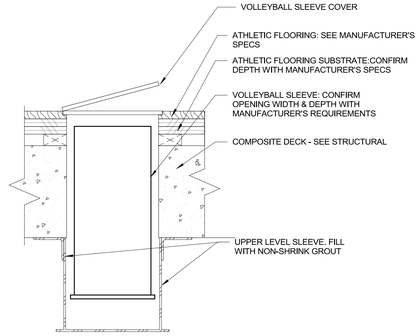

FLOOR SLEEVE FOR VOLLEYBALL 1

SCALE: 3" = 1'-0"

BRIC ARCHITECTURE, INC.
1233 NW NORTHRUP STREET, SUITE 100
PORTLAND, OR 97209 T 503.595.4900

New Middle School / High School

Seaside School District

1801 S. FRANKLIN STREET, SEASIDE, OR 97138
t: 503-738-5591

REGISTERED ARCHITECT
3473
DANIEL J. HESS
PORTLAND, OREGON
STATE OF OREGON

Daniel J. Hess

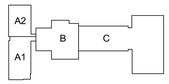

key plan

phase	BP2 PERMIT SET
date	6/15/2018
revisions	
project #	17007

INTERIOR SLAB DETAILS

A9.20

6/15/2018 3:31:43 PM
C:\BRIC Projects\17007 SSD-MSHS_christie.sterne.rvt

DRAWING INDEX

		ISSUE LOG: 50% CD	ISSUE LOG: BP2-PERMIT SET
S0.01	DRAWING INDEX AND LIST OF ABBREVIATIONS	X	X
S0.02	GENERAL STRUCTURAL NOTES	X	X
S0.03	GENERAL STRUCTURAL NOTES CONT.	X	X
S0.04	SPECIAL INSPECTION AND TESTING	X	X
S0.05	SPECIAL INSPECTION AND TESTING CONT.	X	X
S0.06	SPECIAL INSPECTION AND TESTING CONT.	X	X
S0.22	FLOOR LIVE LOAD PLAN - LEVEL 2	X	X
S0.23	FLOOR LIVE LOAD PLAN - LEVEL 3	X	X
S0.31	SNOW DRIFT LOAD PLAN - ROOF	X	X
S0.41	ROOF DIAPHRAGM ATTACHMENT PLAN	X	*
S2.01	OVERALL FOUNDATION PLAN - LEVEL 1	X	X
S2.02	OVERALL FRAMING PLAN - LEVEL 2	X	X
S2.03	OVERALL FRAMING PLAN - LEVEL 3	X	X
S2.04	OVERALL FRAMING PLAN - ROOF	X	X
S2.11	MAT FOUNDATION PLAN - SECTOR A	X	X
S2.11R	MAT FOUNDATION REINFORCING PLAN - SECTOR A	X	X
S2.11S	SLAB ON GRADE PLAN - SECTOR A	X	X
S2.12	MAT FOUNDATION PLAN - SECTOR B	X	X
S2.12R	MAT FOUNDATION REINFORCING PLAN - SECTOR B	X	X
S2.12S	SLAB ON GRADE PLAN - SECTOR B	X	X
S2.13	MAT FOUNDATION PLAN - SECTOR C	X	X
S2.13R	MAT FOUNDATION REINFORCING PLAN - SECTOR C	X	X
S2.13S	SLAB ON GRADE PLAN - SECTOR C	X	X
S2.21	FRAMING PLAN LEVEL 2 - SECTOR A	X	X
S2.22	FRAMING PLAN LEVEL 2 - SECTOR B	X	X
S2.23	FRAMING PLAN LEVEL 2 - SECTOR C	X	X
S2.31	FRAMING PLAN LEVEL 3 - SECTOR A	X	*
S2.32	FRAMING PLAN LEVEL 3 - SECTOR B	X	*
S2.33	FRAMING PLAN LEVEL 3 - SECTOR C	X	*
S2.41	FRAMING PLAN ROOF - SECTOR A	X	*
S2.42	FRAMING PLAN ROOF - SECTOR B	X	*
S2.43	FRAMING PLAN ROOF - SECTOR C	X	*
S3.01	BRACED FRAME ELEVATIONS	X	X
S3.02	BRACED FRAME ELEVATIONS	X	X
S3.10	BRACED FRAME DETAILS	X	*
S3.11	BRACED FRAME DETAILS	X	X
S3.21	CMU WALL ELEVATIONS - SECTOR A	X	X
S3.22	CMU WALL ELEVATIONS - SECTOR A	X	X
S3.23	CMU WALL ELEVATION - SECTOR A	X	X
S3.24	CMU WALL ELEVATIONS - SECTOR C	X	X
S3.25	CMU WALL ELEVATIONS - SECTOR C	X	X
S3.26	CMU WALL ELEVATIONS - SECTOR C	X	X
S5.01	CONCRETE DETAILS	X	X
S5.02	CONCRETE DETAILS	X	X
S6.01	STEEL DETAILS	X	*
S6.02	STEEL DETAILS	X	*
S6.03	STEEL DETAILS	X	*
S6.04	STEEL DETAILS	X	*
S6.05	STEEL DETAILS	X	*
S6.10	STEEL DETAILS	X	*
S7.01	CMU DETAILS	X	*
S7.02	CMU DETAILS		*

ISSUE LOG KEY:
' X ' ISSUED AS PART OF A SET
' - ' NOT A PART OF ISSUED SET
' * ' FOR INFORMATION ONLY

DATE	
06/08/2018	
06/15/2018	

LIST OF ABBREVIATIONS

A.B.	ANCHOR BOLT
ACI	AMERICAN CONCRETE INSTITUTE
ADD'L.	ADDITIONAL
AESS	ARCHITECTURAL EXPOSED STRUCTURAL STEEL
AISC	AMERICAN INSTITUTE OF STEEL CONSTRUCTION INCORPORATED
ALT.	ALTERNATE
ALUM.	ALUMINUM
ARCH.	ARCHITECT
ASCE	AMERICAN SOCIETY OF CIVIL ENGINEERS
ASTM	AMERICAN SOCIETY FOR TESTING AND MATERIALS
AWS	AMERICAN WELDING SOCIETY
BLDG.	BUILDING
BOT.	BOTTOM
BRBF	BUCKLING RESTRAINED BRACED FRAME
C.G.	CENTER OF GRAVITY
C.I.P.	CAST IN PLACE
C.J.	CONTROL JOINT
C.J.P.	COMPLETE JOINT PENETRATION
CL	CENTERLINE
CLR.	CLEAR
CMU	CONCRETE MASONRY UNIT
COL.	COLUMN
CONC.	CONCRETE
CONN.	CONNECTION
CONST.	CONSTRUCTION
CONT.	CONTINUOUS
db	BAR DIAMETER
DBA	DEFORMED BAR ANCHOR
DET.	DETAIL
DIA., Ø	DIAMETER
DIAG.	DIAGONAL
D.L.	DEAD LOAD
DWG.	DRAWING
ELEC.	ELECTRICAL
EL.	ELEVATION
EQ.	EQUAL
EXIST., (E)	EXISTING
EXP.	EXPANSION
EXT.	EXTERIOR
FDN.	FOUNDATION
FIN.	FINISH
FLR.	FLOOR
FT.	FOOT
FTG.	FOOTING
GA.	GAUGE
GALV.	GALVANIZED
GL	GLULAM
HORIZ.	HORIZONTAL
HSS	HOLLOW STRUCTURAL STEEL
IBC	INTERNATIONAL BUILDING CODE
ICBO	INTERNATIONAL CONFERENCE OF BUILDING OFFICIALS
I.D.	INSIDE DIAMETER
IN.	INCH
INT.	INTERIOR
K	KIPS
KSF	KIPS PER SQUARE FOOT
KSI	KIPS PER SQUARE INCH
LB.	POUND
L.L.	LIVE LOAD
LLH	LONG LEG HORIZONTAL
LLV	LONG LEG VERTICAL
LOC.	LOCATION
LONG.	LONGITUDINAL
LSL	LAMINATED STRAND LUMBER BEAM
LVF	LOW VELOCITY FASTENER
LVL	LAMINATED VENEER LUMBER BEAM
MAX.	MAXIMUM
MBMA	METAL BUILDING MANUFACTURERS ASSOCIATION
MECH.	MECHANICAL
MFR.	MANUFACTURER
MIN.	MINIMUM
MISC.	MISCELLANEOUS
MPH	MILES PER HOUR
MT	MAGNETIC PARTICLE TESTING
(N)	NEW
N.I.C.	NOT IN CONTRACT
NOM.	NOMINAL
NO.	NUMBER
N.T.S.	NOT TO SCALE
o.c.	ON CENTER
O.D.	OUTSIDE DIAMETER
OPP.	OPPOSITE
OWJ	OPEN WEB JOIST
PAF	POWDER ACTUATED FASTENER
PART.	PARTITION
P/C	PRECAST
PCF	POUNDS PER CUBIC FOOT
PERIM.	PERIMETER
PL	PLATE
PP	PARTIAL PENETRATION
PSF	POUNDS PER SQUARE FOOT
PSL	PARALLEL STRAND LUMBER
PSI	POUNDS PER SQUARE INCH
P/T	POST-TENSIONED
P.T.	PRESSURE TREATED
PVC	POLYVINYL CHLORIDE
R, RAD.	RADIUS
RCSC	RESEARCH COUNCIL ON STRUCTURAL CONNECTIONS
REF.	REFERENCE
RET.	RETURN
REINF.	REINFORCING
REQ'D.	REQUIRED
REQ'MT'S.	REQUIREMENTS
SCHED.	SCHEDULE
S.C.	SLIP CRITICAL
SCL	STRUCTURAL COMPOSITE LUMBER
SIM.	SIMILAR
SLRS	SEISMIC LOAD RESISTING SYSTEM
S.O.G.	SLAB ON GRADE
SPEC.	SPECIFICATION
SQ.	SQUARE
SS	STAINLESS STEEL
SSMA	STEEL STUD MANUFACTURERS ASSOCIATION
STD.	STANDARD
STRUCT.	STRUCTURAL
SYM.	SYMMETRICAL
THRU	THROUGH
T & G	TONGUE AND GROOVE
TRANS.	TRANSVERSE
TJ	TRUSS JOIST
TS	LIGHT GAUGE TUBE STEEL
TYP.	TYPICAL
U.N.O.	UNLESS NOTED OTHERWISE
U.T.	ULTRASONIC TESTING
VERT.	VERTICAL
V.I.F.	VERIFY IN FIELD
w/	WITH
WF	WIDE FLANGE
w/o	WITHOUT
W.P.	WORK POINT
WPS	WELDING PROCEDURE SPECIFICATION
WWF	WELDED WIRE FABRIC

BR|IC ARCHITECTURE, INC.
1233 NW NORTHRUP STREET, SUITE 100
PORTLAND, OR 97209 T 503.595.4900

New Middle School / High School
Seaside School District
1801 S. FRANKLIN STREET, SEASIDE, OREGON 97138
t: 503-738-5591

kpff
111 SW Fifth Ave., Suite 2500
Portland, OR 97204
O: 503.227.3251
F: 503.227.7980
www.kpff.com
10021700078R17

STEUMPFLE REGISTERED PROFESSIONAL ENGINEER 15773 OREGON JULY 31, 1986 GERALD L. ABDLE
EXPIRES 12-31-19

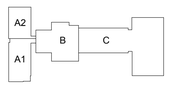

phase	BP2-PERMIT SET
date	6/15/2018
revisions	
project #	17007

DRAWING INDEX AND LIST OF ABBREVIATIONS

S0.01

6/14/2018 12:08:37 PM
C:\1REVIT\100217000 78_Courtney.Bradshaw@kpff.com.rvt

GENERAL STRUCTURAL NOTES

STRUCTURAL DRAWINGS ARE A PORTION OF THE CONTRACT DOCUMENTS AND ARE INTENDED TO BE USED WITH ARCHITECTURAL, MECHANICAL, AND ELECTRICAL DRAWINGS. THE CONTRACTOR IS RESPONSIBLE FOR COORDINATING THE REQUIREMENTS FROM THESE DRAWINGS INTO THEIR SHOP DRAWINGS AND WORK.

THESE GENERAL NOTES SUPPLEMENT THE PROJECT SPECIFICATIONS. REFER TO THE PROJECT SPECIFICATIONS FOR ADDITIONAL REQUIREMENTS. NOTES AND DETAILS ON THE STRUCTURAL DRAWINGS SHALL TAKE PRECEDENCE OVER THE GENERAL NOTES AND TYPICAL DETAILS. WHERE NO DETAILS ARE GIVEN, CONSTRUCTION SHALL BE AS SHOWN FOR SIMILAR WORK.

CODE REQUIREMENTS:
CONFORM TO THE 2014 OREGON STRUCTURAL SPECIALTY CODE (OSSC), BASED ON THE 2012 INTERNATIONAL BUILDING CODE (IBC).

TEMPORARY CONDITIONS:
THE STRUCTURE IS DESIGNED TO FUNCTION AS A UNIT UPON COMPLETION. THE CONTRACTOR IS RESPONSIBLE FOR FURNISHING ALL TEMPORARY BRACING AND/OR SUPPORT THAT MAY BE REQUIRED AS THE RESULT OF THE CONTRACTOR'S CONSTRUCTION METHODS AND/OR SEQUENCES.

CONTRACTOR'S CONSTRUCTION AND/OR ERECTION SEQUENCES SHALL RECOGNIZE AND CONSIDER THE EFFECTS OF THERMAL MOVEMENTS OF STRUCTURAL ELEMENTS DURING THE CONSTRUCTION PERIOD.

RETAINING WALLS WHICH TIE TO UPPER SLABS SHALL NOT BE BACKFILLED UNTIL THE UPPER SLABS REACH FULL STRENGTH UNLESS ADEQUATE BRACING IS PROVIDED AT THE TOP OF THE WALL.

EXISTING CONDITIONS:
ALL EXISTING CONDITIONS, DIMENSIONS AND ELEVATIONS SHALL BE FIELD VERIFIED. THE CONTRACTOR SHALL NOTIFY THE ARCHITECT OF ANY SIGNIFICANT DISCREPANCIES FROM CONDITIONS SHOWN ON THE DRAWINGS.

ASSUMED FUTURE CONSTRUCTION:
VERTICAL: NONE
HORIZONTAL: NONE

DESIGN CRITERIA:
DESIGN WAS BASED ON THE STRENGTH AND DEFLECTION CRITERIA OF THE OSSC. IN ADDITION TO THE DEAD LOADS, THE FOLLOWING LOADS AND ALLOWABLES WERE USED FOR DESIGN, WITH LIVE LOADS (L.L.) REDUCED PER OSSC:

DESIGN CRITERIA		
GRAVITY SYSTEM CRITERIA		
ROOF LIVE LOAD	**20 PSF L.L. (ALSO SEE SNOW LOAD CRITERIA BELOW)**	
FLOOR LIVE LOADS:	**UNIFORM LOAD**	**CONCENTRATED LOAD**
CLASSROOMS	40 PSF L.L. + 15 PSF FOR PARTITIONS	1,000 LBS.
CORRIDORS AND STAIRS	100 PSF L.L.(80 PSF ABOVE FIRST FLOOR)	1,000 LBS. (300 LBS. AT STAIRS)
CAFETERIA, GYMNASIUM	100 PSF L.L.	-
LIBRARY (READING ROOM)	60 PSF L.L.	1,000 LBS.
KITCHEN, CULINARY ARTS	150 PSF L.L.	-
STORAGE (LIGHT)	125 PSF L.L.	2,000 LBS.
LIBRARY (STACK ROOMS)	150 PSF L.L.	1,000 LBS.
MEP ROOMS	150 PSF L.L.	-
VERTICAL FLOOR DEFLECTION (CLADDING DESIGN)	0.75" OR L/360 WHICHEVER IS LESS LONG TERM DEAD LOAD PLUS LIVE LOAD; 0.375" OR L/600 WHICHEVER IS LESS AT BRICK VENEER SUPPORTS	
VERTICAL FLOOR DEFLECTION (INTERIOR)	L/360 LIVE LOAD PER OSSC TABLE 1604.3	
NOTES:	1. LIVE LOADS REDUCED PER OSSC.	
	2. MEMBER DESIGNED FOR MORE CRITICAL OF UNIFORM OR CONCENTRATED LOAD.	
SNOW CRITERIA		
DESIGN ROOF SNOW LOAD	22 PSF MINIMUM IN ACCORDANCE WITH OSSC 22 PSF (+5 PSF RAIN ON SNOW SURCHARGE WHERE RUNNOFF IS CONSTRAINED)	
SNOW DRIFT	PER OSSC AS SHOWN ON PLANS	
GROUND SNOW LOAD	Pg= 4 PSF IN ACCORDANCE WITH 2013 SNOW LOAD ANALYSIS FOR OREGON	
FLAT ROOF SNOW LOAD	Pf = 3 PSF	
SNOW EXPOSURE FACTOR	Ce = 1.0	
SNOW LOAD IMPORTANCE FACTOR	Is = 1.1	
THERMAL FACTOR	Ct = 1.0	
GEOTECHNICAL CRITERIA		
DESIGN BASED ON REPORT BY:	GEODESIGN. INC. DATED NOVRMBER 20, 2017	
RETAINING WALLS - CANTILEVERED	35 PCF (EQUIVALENT FLUID PRESSURE)	
RETAINING WALLS - BRACED AT TOP	55 PCF (EQUIVALENT FLUID PRESSURE)	
RETAINING WALLS - SEISMIC	8.5H^2 PLF APPLIED AT 0.6H; (H=WALL HEIGHT)	
PASSIVE PRESSURE	250 PCF (EQUIVALENT FLUID PRESSURE)	
COEFFICIENT OF FRICTION	0.4	
ALLOWABLE SOIL PRESSURE:		
MAXIMUM BEARING PRESSURE	3,000 PSF	
SHORT TERM LOADING	6,000 PSF	
WIND CRITERIA		
RISK CATEGORY	III	
MAIN WIND FORCE RESISTING SYSTEM	Vult = 145 MPH ULTIMATE DESIGN WIND SPEED (3-SECOND GUST)	
COMPONENTS AND CLADDINGS	Vult = 145 MPH ULTIMATE DESIGN WIND SPEED (3-SECOND GUST)	
EXPOSURE CATEGORY	B	
GUST/INTERNAL PRESSURE	GCpi = +/- 0.18	
SEISMIC CRITERIA		
RISK CATEGORY	IV - HS GYM AND COMMON SECTOR, III - MS WING	
SEISMIC DESIGN CATEGORY	D	
SITE CLASS	D	
IMPORTANCE FACTOR	IE = 1.5 (HS GYM AND COMMON SECTOR), IE = 1.25 (MS WING)	
SITE ADJUSTED MCE SPECTRAL ACCELERATION	SMS = 1.598	SM1 = 1.347
DESIGN SPECTRAL ACCELERATION	SDS = 1.065	SD1 = 0.898
ANALYSIS PROCEDURE	MODAL RESPONSE SPECTRUM PER ASCE 7-10, SECTION 12.9	
	HIGH SCHOOL GYM AND AUX. GYM	
	X DIRECTION (E / W)	Y DIRECTION (N / S)
SEISMIC FORCE RESISTING SYSTEM (SFRS)	SPECIAL REINFORCED MASONRY SHEAR WALLS	SPECIAL REINFORCED MASONRY SHEAR WALLS
RESPONSE MODIFICATION FACTOR	R = 5	R = 5
SEISMIC RESPONSE COEFFICIENT	Cs = 0.320	Cs = 0.320
DESIGN BASE SHEAR	1517 KIPS	1517 KIPS
REDUNDANCY FACTOR	rho = 1.0	rho = 1.0
DESIGN INELASTIC STORY DRIFT	Δ = 0.01h	Δ = 0.01h
	MIDDLE SCHOOL WING	
	X DIRECTION (E / W)	Y DIRECTION (N / S)
SEISMIC FORCE RESISTING SYSTEM (SFRS)	SPECIAL REINFORCED MASONRY SHEAR WALLS	SPECIAL REINFORCED MASONRY SHEAR WALLS
RESPONSE MODIFICATION FACTOR	R = 5	R = 5
SEISMIC RESPONSE COEFFICIENT	Cs = 0.266	Cs = 0.266
DESIGN BASE SHEAR	1015 KIPS	1015 KIPS
REDUNDANCY FACTOR	rho = 1.0	rho = 1.0
DESIGN INELASTIC STORY DRIFT	Δ = 0.01h	Δ = 0.01h
	COMMON SECTOR	
	X DIRECTION (E / W)	Y DIRECTION (N / S)
SEISMIC FORCE RESISTING SYSTEM (SFRS)	STEEL BUCKLING RESTRAINED BRACED FRAMES	STEEL BUCKLING RESTRAINED BRACED FRAMES
RESPONSE MODIFICATION FACTOR	R = 8	R = 8
SEISMIC RESPONSE COEFFICIENT	Cs = 0.20	Cs = 0.20
DESIGN BASE SHEAR	1453 KIPS	1453 KIPS
REDUNDANCY FACTOR	rho = 1.3	rho = 1.3
DESIGN INELASTIC STORY DRIFT	Δ = 0.01h	Δ = 0.01h

BP2 - ADD 1

7/3/2018 2:43:47 PM
C:\1REVIT\10021700078_Courtney.Bradshaw@kpff.com.rvt

SEISMIC FORCE-RESISTING SYSTEM:
THE SEISMIC FORCE-RESISTING SYSTEM (SFRS) FOR THE COMPLETED STRUCTURE IS AS FOLLOWS:

MIDDLE SCHOOL WING: STEEL ROOF DECK AND CONCRETE OVER METAL DECK FLOOR DIAPHRAGMS TRANSFER LATERAL LOADS TO CMU WALLS AROUND THE MIDDLE SCHOOL GYMNASIUM AND THE CLASSROOM BLOCK WHICH TRANSFER LOADS THROUGH THE MAT SLAB INTO THE SOIL.

COMMON AND HIGH SCHOOL WING: STEEL ROOF DECK AND CONCRETE OVER METAL DECK FLOOR DIAPHRAGMS TRANSFER LATERAL LOADS BRB FRAMES IN THE CLASSROOM BLOCK WHICH TRANSFER LOADS THROUGH THE MAT SLAB INTO THE SOIL.

HIGH SCHOOL GYMNASIUM WING: STEEL ROOF DECK AND CONCRETE OVER METAL DECK FLOOR DIAPHRAGMS TRANSFER LATERAL LOADS TO CMU WALLS WHICH TRANSFER LOADS THROUGH THE MAT SLAB INTO THE SOIL.

REFERENCE SHEETS S3.01 THRU S3.25 FOR SFRS ELEVATIONS AND DETAILS. REFERENCE PLANS FOR ADDITIONAL SFRS COMPONENTS AND DETAILS.

REFER TO THE GENERAL STRUCTURAL NOTES AND PROJECT SPECIFICATIONS FOR DETAILING, INSTALLATION, TESTING AND INSPECTION REQUIREMENTS FOR MEMBERS THAT ARE PART OF THE SEISMIC FORCE RESISTING SYSTEM (SFRS).

DESIGN AND DETAILING WAS BASED ON CRITERIA FOR SEISMIC DESIGN CATEGORY D.

STRUCTURAL OBSERVATION:
THE STRUCTURAL ENGINEER OF RECORD (SER) WILL PERFORM STRUCTURAL OBSERVATION BASED ON THE REQUIREMENTS OF THE OSSC AT THE STAGES OF CONSTRUCTION LISTED BELOW. CONTRACTOR SHALL PROVIDE SUFFICIENT NOTICE AND ACCESS FOR THE SER TO PERFORM THESE OBSERVATIONS.

STRUCTURAL OBSERVATIONS			
ITEM	**OBSERVED BY (2)**		**COMMENTS**
	AOR	**SER**	
PRIOR TO FIRST CONCRETE POUR		X	REF. NOTES 1,3,4,5
PRIOR TO FIRST CONCRETE DECK POUR		X	REF. NOTES 1,3,4,5
DURING INITIAL STEEL ERECTION		X	REF. NOTES 1,3,4
AS REQUIRED TO ADDRESS STRUCTURAL ISSUES		X	REF. NOTES 1,3,4

FOOTNOTES:

1. CONTRACTOR IS RESPONSIBLE FOR NOTIFYING THE SER IN ADVANCE.
2. SER - STRUCTURAL ENGINEER OF RECORD. AOR - ARCHITECT OF RECORD.
3. A FIELD REPORT WILL BE SUBMITTED TO THE BUILDING DEPARTMENT FOLLOWING EACH SITE VISIT.
4. STRUCTURAL OBSERVATION IS FOR THE GENERAL CONFORMANCE OF THE STRUCTURAL DRAWING, SPECIAL INSPECTION IS STILL REQUIRED.
5. AFTER REINFORCING STEEL HAS BEEN INSTALLED.

SPECIAL INSPECTION AND TESTING:
SPECIAL INSPECTION WILL BE PROVIDED BY THE OWNER BASED ON THE REQUIREMENTS OF THE OSSC AS SUMMARIZED IN THE SPECIAL INSPECTION AND TESTING PROGRAM ON SHEET S00X. CONTRACTOR SHALL PROVIDE SUFFICIENT NOTICE AND ACCESS FOR THE SPECIAL INSPECTOR TO PERFORM THESE INSPECTIONS.

SUBMITTALS:
SHOP DRAWINGS SHALL BE SUBMITTED TO THE ARCHITECT PRIOR TO FABRICATION AND CONSTRUCTION OF ALL STRUCTURAL ITEMS, INCLUDING THE FOLLOWING:

SUBMITTALS			
ITEM	**SUBMITTAL (1,4)**	**DEFERRED SUBMITTAL (2,4)**	**COMMENTS**
CONCRETE MIX DESIGNS	X		
CONCRETE REINFORCEMENT	X		
MASONRY REINFORCEMENT	X		
CONCRETE ANCHORAGES	X		
EMBEDDED STEEL ITEMS	X		
STRUCTURAL STEEL	X		
STEEL WELDING PROCEDURES	X		
STEEL JOISTS AND JOIST GIRDERS		X	
STEEL DECKING	X		
INTERIOR LIGHT GAUGE METAL FRAMING	X		
STEEL FASTENERS	X		
EXTERIOR LIGHT GAUGE METAL FRAMING		X	
CURTAIN WALL, WINDOW WALL AND OTHER GLAZING SYSTEMS		X	
SKYLIGHTS, CANOPIES AND AWNINGS		X	
STAIRS, LADDERS, AND RAILINGS		X	
MEP EQUIPMENT ANCHORAGE AND BRACING		X	REF. NOTES

FOOTNOTES:

1. SHOP DRAWINGS SHALL BE SUBMITTED TO THE ARCHITECT PRIOR TO FABRICATION AND CONSTRUCTION OF STRUCTURAL ITEMS. IF THE SHOP DRAWINGS DIFFER FROM OR ADD TO THE DESIGN OF THE STRUCTURAL DRAWINGS, THEY SHALL BEAR THE SEAL AND SIGNATURE OF A STRUCTURAL ENGINEER REGISTERED IN THE STATE OF OREGON. ANY CHANGES TO THE STRUCTURAL DRAWINGS SHALL BE SUBMITTED TO THE ARCHITECT AND ARE SUBJECT TO REVIEW AND ACCEPTANCE OF THE STRUCTURAL ENGINEER.

2. DESIGN DRAWINGS, SHOP DRAWINGS, AND CALCULATIONS FOR THE DESIGN AND FABRICATION OF ITEMS THAT ARE DESIGNED BY OTHERS SHALL BEAR THE SEAL AND SIGNATURE OF A STRUCTURAL ENGINEER REGISTERED IN THE STATE OF OREGON, AND SHALL BE SUBMITTED TO THE ARCHITECT PRIOR TO FABRICATION. CALCULATIONS SHALL BE INCLUDED FOR ALL CONNECTIONS TO THE STRUCTURE, CONSIDERING LOCALIZED EFFECTS ON STRUCTURAL ELEMENTS INDUCED BY THE CONNECTION LOADS. DESIGN SHALL BE BASED ON THE REQUIREMENTS OF THE OSSC AND AS NOTED UNDER "DESIGN CRITERIA".

3. THE CONTRACTOR SHALL COORDINATE SEISMIC RESTRAINTS OF MECHANICAL, PLUMBING, AND ELECTRICAL EQUIPMENT, MACHINERY, AND ASSOCIATED PIPING WITH THE STRUCTURE. CONNECTIONS TO STRUCTURE SHALL CONFORM TO ASCE 7-10 CHAPTER 13, BE DESIGNED BY AN ENGINEER REGISTERED IN THE STATE OF OREGON, AND SHALL BE SUBMITTED TO THE ARCHITECT PRIOR TO FABRICATION.

4. FIELD ENGINEERED DETAILS DEVELOPED BY THE CONTRACTOR THAT DIFFER FROM OR ADD TO THE STRUCTURAL DRAWINGS SHALL BEAR THE SEAL AND SIGNATURE OF A STRUCTURAL ENGINEER REGISTERED IN THE STATE OF OREGON AND SHALL BE SUBMITTED TO THE ARCHITECT PRIOR TO CONSTRUCTION.

5. THE USE OF REPRODUCTIONS OR PHOTOCOPIES OF THE CONTRACT DRAWINGS SHALL NOT BE PERMITTED. WHEN CAD OR REVIT FILES ARE PROVIDED TO THE CONTRACTOR OR SUBCONTRACTORS, IT IS THE RESPONSIBILITY OF THE DETAILERS TO REMOVE ALL INFORMATION NOT DIRECTLY RELEVANT TO THE CREATION OF THE PLACING DRAWINGS AS WELL AS ALL REFERENCES TO THE OUTSIDE SOURCE FILES.

CONCRETE:
CONCRETE WORK SHALL CONFORM TO CHAPTER 19 OF THE OSSC. CONCRETE STRENGTHS SHALL BE VERIFIED BY STANDARD CYLINDER TESTS PER ASTM C39. MIX DESIGNS SHALL BE AS FOLLOWS:

CONCRETE MIX DESIGNS				
USE	f'c (PSI)	TEST AGE (DAYS)	MAX. W/CM RATIO (NOTE 1)	MAX. AGGREGATE SIZE
INTERIOR EXPOSED SLABS ON GRADE OR METAL DECK (NOTE 3)	**3,000**	**28**	0.42	**1"**
INTERIOR SLABS ON GRADE	4,000	28	0.50	1"
BASEMENT WALLS, SPREAD FOOTINGS AND MAT FOUNDATIONS	5,000	28	0.45	1"
CONCRETE ON METAL DECK, U.N.O.	4,000	28	0.50	3/4"
EXTERIOR SLABS ON GRADE, CURBS, SIDEWALKS, ETC.	5,000	28	0.40	3/4"

TABLES NOTES:
1. VERIFY WATER-CEMENTITIOUS MATERIAL RATIO WITH FLOOR COVERING MANUFACTURER FOR CONCRETE FLOORS WITH MOISTURE SENSITIVE FLOOR COVERINGS.
2. ESTABLISH WATER-CEMENTITIOUS MATERIAL RATIO PER ACI 318-11 CHAPTER 5.
3. REFERENCE EXPOSED SLAB GENERAL NOTES FOR ADDITIONAL MIX REQUIREMENTS.
4. POST-TENSIONED OR PRESTRESSED CONCRETE SHALL NOT CONTAIN MORE THAN 0.06% CHLORIDE IONS BY WEIGHT OF CEMENT.

PORTLAND CEMENT CONTENT MAY BE REPLACED UP TO 20% WITH FLY ASH CONFORMING TO ASTM C618 (INCLUDING TABLE 2A) TYPE F OR TYPE C OR UP TO 50% WITH SLAG CEMENT CONFORMING TO ASTM C989, PROVIDED THAT THE MIX STRENGTH IS SUBSTANTIATED BY TEST DATA. FOR MIX DESIGNS WITH f'c = 5,000 PSI OR LESS, SLAG CEMENT MAY BE SUBSTITUTED FOR FLY ASH AT A 1:1 RATIO WITHOUT TEST DATA. WHEN SLAG CEMENT IS SUBSTITUTED IN HIGHER STRENGTH MIXES OR AT DIFFERENT RATIO, THE MIX STRENGTH MUST BE SUBSTANTIATED BY TEST DATA.

A WATER-REDUCING ADMIXTURE CONFORMING TO ASTM C494 USED IN STRICT ACCORDANCE WITH THE MANUFACTURER'S RECOMMENDATIONS SHALL BE INCORPORATED IN CONCRETE DESIGN MIXES. A HIGH-RANGE WATER-REDUCING (HRWR) ADMIXTURE CONFORMING TO ASTM C494 TYPE F OR G MAY BE USED IN CONCRETE MIXES PROVIDING THAT THE SLUMP DOES NOT EXCEED 10". AN AIR-ENTRAINING AGENT CONFORMING TO ASTM C260 SHALL BE USED IN CONCRETE MIXES FOR ALL CONCRETE EXPOSED TO WEATHER. THE AMOUNT OF ENTRAINED AIR BY VOLUME SHALL BE AS FOLLOWS ± 1.5%:

CONCRETE MIX AIR CONTENT		
MAX. AGGREGATE SIZE	**CONCRETE SUBJECT TO FREEZE/THAW**	**CONCRETE SUBJECT TO CONT. MOISTURE AND/OR DEICING CHEMICALS**
3/8"	6.0%	7.5%
1/2"	5.5%	7.0%
3/4"	5.0%	6.0%
1"	4.5%	6.0%

CONCRETE ELEMENTS SUBJECT TO FREEZE/THAW INCLUDE ALL BASMENT WALLS, SPREAD FOOTINGS, MAT FOUNDATIONS, EXTERIOR, CURBS, SIDEWALKS AND EXTERIOR SLABS.

THE CONTRACTOR SHALL SUBMIT CONCRETE MIX DESIGNS ALONG WITH TEST DATA COMPLIANT WITH ACI 318-11 OSSC SECTION 1905 A MINIMUM OF TWO WEEKS PRIOR TO PLACING CONCRETE. NO WATER MAY BE ADDED TO CONCRETE IN THE FIELD UNLESS SPECIFICALLY APPROVED IN WRITING BY THE CONCRETE SUPPLIER IN CONJUNCTION WITH THE CONCRETE MIX DESIGN.

SLEEVES, OPENINGS, CONDUIT, AND OTHER EMBEDDED ITEMS NOT SHOWN ON THE STRUCTURAL DRAWINGS SHALL BE APPROVED BY THE STRUCTURAL ENGINEER BEFORE PLACING CONCRETE. CONDUITS EMBEDDED IN SLABS SHALL NOT BE LARGER IN OUTSIDE DIMENSION THAN ONE THIRD OF THE THICKNESS OF THE SLAB AND SHALL NOT BE SPACED CLOSER THAN THREE DIAMETERS ON CENTER.

WHERE NEW CONCRETE IS PLACED AGAINST EXISTING CONCRETE, THE EXISTING CONCRETE SURFACE SHALL BE CLEANED AND ROUGHENED TO A MINIMUM 1/4" AMPLITUDE PER ACI 318 SECTION 11.6.9. PROVIDE 3/4" CHAMFERS ON ALL EXPOSED CONCRETE EDGES, UNLESS NOTED OTHERWISE.

VERIFY ALL BLOCK OUTS WITH ARCHITECTURAL, MECHANICAL, ELECTRICAL, AND PLUMBING REQUIREMENTS.

FIBER REINFORCEMENT:
FIBER REINFORCEMENT SHALL CONFORM TO ASTM C1116, TYPE III FIBER REINFORCED CONCRETE. FIBER REINFORCMENT SHALL BE COMPOSED OF SYNTHETIC MICROFIBERS. PROVIDE FIBER REINFORCMENT IN ALL INTERIOR EXPOSED SLABS WITH A MINIMUM DOSAGE OF 0.5 LB/CU YD. AND NOT EXCEEDING 1.5LB/CU YD. BATCHING AND MIXING SHALL BE PERFORMED IN STRUCT CONFORMANCE WITH THE MANUFACTURER'S RECOMMENDATIONS. FIBER REINFORCEMENT IS PROVIDED IN ADDITOIN TO STEEL REINFORCEMENT AND SHALL NOT REPLACE THE STEEL REINFORCEMENT INDICATED ON PLANS.

EXPOSED SLABS:
REFERENCE ARCHITECTURAL DRAWINGS FOR SLABS ON GRADE AND SLABS ON DECK THAT ARE INTENDED TO BE EXPOSED TO VIEW. IN ADDITION TO THE REQUIREMENTS ABOVE UNDER CONCRETE NOTES, FINE AGGREGATE GRADING SHALL CONFORM TO ASTM C33 AND COMBINED AGGREGATE GRADING SHALL CONFORM TO ACI 302.1R. CONCRETE SHRINKAGE SHALL BE LESS THAN 0.04% AT 28 DAYS WHEN TESTED PER ASTM C157. SHRINKAGE TEST DATA TO BE SUBMITTED FOR APPROVAL WITH THE MIX DESIGN.

THE CONTRACTOR SHALL PROTECT EXPOSED SLABS FROM DAMAGE DUE TO EQUIPMENT AND OTHER UNINTENDED LOADING DURING CONSTRUCTION.

REFERENCE SLAB ON GRADE DETAILS AND THE GEOTECHNICAL REPORT FOR ADDITIONAL INFORMATION ON SUBGRADE REQUIREMENTS. REFERENCE THE SPECIFICATIONS FOR ADDITIONAL REQUIREMENTS INCLUDING CURING, FINISHING AND VAPOR BARRIER.

REINFORCING STEEL:
ALL LONGITUDINAL FLEXURAL REINFORCEMENT IN BEAMS, COLUMNS AND SHEAR WALLS SHALL BE ASTM A706, GRADE 60. ALL OTHER DEFORMED BAR REINFORCEMENT MAY BE ASTM A615 GRADE 60 OR ASTM A706 GRADE 60. ASTM A615 REINFORCEMENT MAY BE SUBSTITUTED FOR ASTM A706 REINFORCEMENT PROVIDED THAT THE ACTUAL YIELD STRENGTH BASED ON MILL TESTS DOES NOT EXCEED 78,000 PSI AND THE RATIO OF ACTUAL TENSILE STRENGTH TO ACTUAL YIELD STRENGTH IS NOT LESS THAN 1.25 AND THE ELONGATION REQUIREMENTS OF ACI 318-14 ARE MET. MILL TESTS CERTIFICATIONS FOR SUBSTITUTED BARS SHALL BE SUBMITTED TO THE SPECIAL INSPECTOR AND EOR PRIOR TO PLACEMENT.

SMOOTH WELDED WIRE FABRIC (WWF) SHALL BE ASTM A1064, UNLESS NOTED OTHERWISE. REINFORCING STEEL TO BE WELDED SHALL CONFORM TO ASTM A706. WELDING SHALL COMPLY WITH AWS D1.4. COLUMN SPIRALS SHALL BE PLAIN OR DEFORMED BARS CONFORMING TO ASTM A615, GRADE 60. REINFORCING STEEL SHALL BE SECURELY TIED IN PLACE WITH #16 ANNEALED IRON WIRE.

BARS IN BEAMS AND SLABS SHALL BE SUPPORTED ON WELL-CURED CONCRETE BLOCKS OR APPROVED METAL OR PLASTIC CHAIRS, AS SPECIFIED BY THE CRSI MANUAL OF STANDARD PRACTICE, MSP-1. REINFORCING STEEL SHALL BE DETAILED IN ACCORDANCE WITH THE "ACI MANUAL OF STANDARD PRACTICE FOR DETAILING REINFORCED CONCRETE STRUCTURES," ACI 315. SHOP DRAWINGS SHALL INCLUDE ELEVATIONS OF ALL BEAMS, WALLS AND COLUMNS SHOWING BAR LOCATIONS. LAP ALL REINFORCING BARS PER THE TYPICAL LAP SPLICE LENGTH SCHEDULES, EXCEPT AS NOTED ON DRAWINGS. USE LAP LENGTH FOR SMALLER BAR WHEN SPLICING DIFFERENT BAR SIZES. BARS SPLICED WITH NONCONTACT LAPS SHALL BE SPACED NO FARTHER THAN 1/5TH THE LAP LENGTH OR 6 INCHES. MECHANICAL SPLICES NOTED ON THE PLANS SHALL BE DAYTON SUPERIOR BAR-LOCK (ICC ESR-2495) OR TAPER-LOCK COUPLERS (IAPMO ES-0319) OR APPROVED WITH A CURRENT EVALUATION APPROVAL REPORT.

TYP. WALL AND SLAB LAP SPLICE LENGTH SCHEDULE (IN.)						
BAR SIZE	WALL VERTICAL AND SLAB BOTTOM BARS (NOTE 7)			WALL HORIZONTAL AND SLAB TOP BARS (NOTE 7)		
	f'c = 3,000 PSI	f'c = 4,000 PSI	f'c = 5,000 PSI	f'c = 3,000 PSI	f'c = 4,000 PSI	f'c = 5,000 PSI
#3	18	16	14	24	20	18
#4	30	26	24	38	34	30
#5	36	32	30	48	42	38
#6	44	38	34	58	50	44
#7	70	62	54	92	78	70
#8	86	74	68	112	98	88
#9	104	92	82	136	118	106
#10	126	108	98	164	142	126

TYP. BEAM AND COLUMN LAP SPLICE LENGTH SCHEDULE (IN.)												
BAR SIZE	f'c = 3,000 PSI		f'c = 4,000 PSI		f'c = 5,000 PSI		f'c = 6,000 PSI		f'c = 7,000 PSI		f'c ≥ 8,000 PSI	
	BEAM TOP BARS	OTHER BARS	BEAM TOP BARS	OTHER BARS	BEAM TOP BARS	OTHER BARS	BEAM TOP BARS	OTHER BARS	BEAM TOP BARS	OTHER BARS	BEAM TOP BARS	OTHER BARS
#4	26	18	22	16	20	14	18	14	18	12	16	12
#5	34	22	30	20	26	18	24	16	22	16	20	14
#6	40	28	34	24	32	22	28	20	26	18	24	16
#7	58	38	50	34	46	30	42	28	38	26	36	24
#8	66	44	58	38	52	34	48	32	44	30	42	28
#9	76	56	66	48	60	42	54	40	50	36	48	34
#10	88	68	76	58	68	54	62	48	58	44	54	42
#11	104	80	92	70	82	64	74	58	68	54	64	50

TYP. FOUNDATION AND MAT LAP SPLICE LENGTH SCHEDULE (IN.)						
BAR SIZE	BOTTOM BARS (NOTE 7)			TOP BARS (NOTE 7)		
	f'c = 3,000 PSI	f'c = 4,000 PSI	f'c = 5,000 PSI	f'c = 3,000 PSI	f'c = 4,000 PSI	f'c = 5,000 PSI
#3	18	14	14	22	20	18
#4	22	20	18	28	26	22
#5	28	24	22	36	32	28
#6	34	28	26	42	38	34
#7	48	42	38	62	54	48
#8	54	48	42	70	62	54
#9	62	54	48	80	70	62
#10	70	60	54	90	78	70
#11	78	68	60	104	90	82

TABLE NOTES:
1. MINIMUM LAP SPLICES NOTED ARE FOR NON-LATERAL LOAD RESISTING ELEMENTS. FOR REBAR LAPS SPLICES AT LATERAL LOAD RESISTING ELEMENTS, REFERENCE PLANS AND ELEVATIONS.
2. ASTM A615 OR ASTM A706, GRADE 60 DEFORMED REINFORCING BARS
3. MINIMUM CLEAR COVER AND BAR SPACING of 4db TO BE PROVIDED.
4. NORMAL WEIGHT CONCRETE, FOR LIGHT-WEIGHT CONCRETE MULTIPLY TABLE VALUES BY 1.3.
5. UNCOATED BARS, FOR EPOXY-COATED BARS MULTIPLY TABLE VALUES BY 1.5.
6. COMBINATIONS OF EFFECTS DUE TO CONCRETE STRENGTH, CONCRETE WEIGHT, AND EPOXY COATING ARE CUMULATIVE.
7. SLAB, FOUNDATION AND MAT TOP BARS ARE BARS CAST ABOVE MORE THAN 12" OF FRESH CONCRETE. ALL OTHER SLAB BARS MAY BE CONSIDERED BOTTOM BARS.

REINFORCING STEEL SHALL HAVE PROTECTION AS FOLLOWS:

REINFORCING STEEL CONCRETE COVER	
USE	**CLEAR COVER**
BEAMS, JOISTS AND COLUMNS	1-1/2" (TO STIRRUPS OR TIES)
SLABS	3/4"
PARKING SLABS AND EXPOSED SLABS	1-1/2" (TOP), 1" (BOTTOM)
WALLS: INTERIOR FACES	1"
EXPOSED TO EARTH OR WEATHER	1-1/2" (#5 AND SMALLER)
	2" (#6 AND LARGER)
CONCRETE CAST AGAINST AND EXPOSED TO EARTH	3"

BP2 - ADD 1

CONCRETE REINFORCING DETAILS:
CONTINUE HORIZONTAL WALL BARS THROUGH PILASTERS, COLUMNS AND INTERSECTING WALLS. AT SLAB AND WALL OPENINGS PROVIDE A MINIMUM OF TWO #5 BARS OVER, UNDER AND AT THE SIDES OF THE OPENINGS. EXTEND THESE BARS LAP DISTANCE OR A MINIMUM OF 2'-0" PAST THE OPENING. PROVIDE ONE #5 FOR SINGLE-LAYER REINFORCING AND TWO #5 FOR DOUBLE-LAYER REINFORCING, 4'-0" LONG, DIAGONALLY AT EACH CORNER OF ALL OPENINGS. REFER TO TYPICAL DETAILS FOR DISPOSITION OF CORNER BARS AND BARS IN SMALL WALL SECTIONS. SLAB BARS SHALL BE HOOKED INTO WALLS, OR HOOKED DOWELS SHALL BE PROVIDED TO MATCH SLAB REINFORCING. PROVIDE TWO #4, 4'-0" LONG DIAGONALLY AT EACH RE-ENTRANT CORNER IN SLABS. PROVIDE HOOKED DOWELS FROM FOOTINGS TO MATCH VERTICAL WALL REINFORCING, UNLESS NOTED OTHERWISE. SHOP DRAWINGS SHALL INCLUDE ALL SPECIAL REINFORCEMENT LISTED ABOVE.

CONCRETE ACCESSORIES:
HEADED SHEAR STUDS SHALL BE NELSON HEADED ANCHORS WITH FLUXED ENDS (ICC ESR-2856) OR APPROVED. DEFORMED BAR ANCHORS (DBA) SHALL BE NELSON, TYPE D6L A706, OR APPROVED. STUDS AND DBA SHALL BE AUTOMATICALLY END-WELDED WITH THE MANUFACTURER'S STANDARD EQUIPMENT IN ACCORDANCE WITH THEIR RECOMMENDATIONS.

POST-INSTALLED ANCHORS SHALL BE OF THE TYPE AND PRODUCT SPECIFIED ON THE DRAWINGS OR AS FOLLOWS:

POST INSTALLED CONCRETE ANCHORS	
TYPE	**APPROVED ANCHORS**
EXPANSION	**SIMPSON STRONG-BOLT 2 (ICC ESR-3037)**
CONCRETE SCREW	**SIMPSON TITEN HD (ICC ESR-2713)**
EPOXY ADHESIVE	**HILTI HIT-RE 500 V3 (ICC ESR-3814)**

ALL ANCHORS SHALL BE INSTALLED IN STRICT CONFORMANCE WITH THE MANUFACTURER'S RECOMMENDATIONS AND PRODUCT EVALUATION REPORTS. EMBEDMENTS SPECIFIED ON DRAWINGS ARE "EFFECTIVE" EMBEDMENTS. REFERENCE MANUFACTURER LITERATURE FOR CORRESPONDING ACTUAL EMBEDMENT DEPTHS.

REQUESTS FOR ANCHOR SUBSTITUTIONS SHALL BE SUBMITTED TO THE EOR IN WRITING ALONG WITH EVIDENCE OF EQUAL OR GREATER CAPACITY TO THE SPECIFIED CONNECTION. DO NOT CUT REINFORCING IN NEW OR EXISTING CONCRETE DURING INSTALLATION.

INSTALLATION OF ADHESIVE ANCHORS HORIZONTALLY OR UPWARDLY INCLINED SHALL BE PERFORMED BY A CERTIFIED ADHESIVE ANCHOR INSTALLER AS CERTIFIED THROUGH ACI/CRSI AND IN ACCORDANCE WITH ACI 318-11 SECTION D.9.2.2. PROOF OF CURRENT CERTIFICATION SHALL BE SUBMITTED TO THE EOR PRIOR TO INSTALLATION.

ANCHORS EXPOSED TO EARTH OR WEATHER SHALL BE PROTECTED FROM CORROSION BY HOT-DIP GALVANIZING OR USE OF STAINLESS STEEL. PERMANENTLY EXPOSED EMBEDDED PLATES AND ANGLES SHALL BE HOT-DIPPED GALVANIZED AFTER FABRICATION, UNLESS NOTED OTHERWISE.

NO LOADS OR WELDS SHALL BE PLACED ON EMBEDDED PLATES OR ANGLES FOR A MINIMUM OF 7 DAYS AFTER CASTING. IN ACCORDANCE WITH ACI 318-11 SECTION D.2.2 ADHESIVE ANCHORS SHALL NOT BE INSTALLED FOR A MINIMUM OF 21 DAYS AFTER CASTING.

REINFORCED CONCRETE MASONRY:
CONCRETE MASONRY UNITS SHALL COMPLY WITH ASTM C90, MEDIUM WEIGHT, SAMPLED AND TESTED IN ACCORDANCE w/ ASTM C140. LINEAL SHRINKAGE FOR UNITS SHALL NOT EXCEED 0.065%. BLOCK COMPRESSIVE STRENGTH SHALL BE AS INDICATED IN BELOW TABLE. ASSEMBLIES SHALL HAVE A MINIMUM COMPRESSIVE STRENGTH (f 'm) AS INDICATED IN BELOW TABLE AS VERIFIED BY THE UNIT STRENGTH METHOD CONFORMING TO OSSC SECTION 2105. WALLS SHALL BE REINFORCED AS SHOWN ON THE PLANS AND DETAILS AND, IF NOT SHOWN, SHALL BE AS NOTED UNDER "MASONRY REINFORCING STEEL". PROVIDE VERTICAL EXPANSION JOINTS IN CONTINUOUS MASONRY SUCH THAT THE DISTANCE BETWEEN JOINTS DOES NOT EXCEED THE LESSER OF A LENGTH-TO-HEIGHT RATIO OF 1.5 OR 25 FT. REFERENCE ARCHITECTURAL DRAWINGS FOR LOCATIONS.

CONCRETE MASONRY ASSEMBLY STRENGTH			
f'm (PSI)	**BLOCK UNIT STRENGTH (PSI)**	**GROUT STRENGTH (PSI)**	**MORTAR**
2,000	2,800	2,000	TYPE M OR S
2,500	3,750	2,500	TYPE M OR S
3,000	4,800	3,000	TYPE M OR S

MORTAR:

MORTAR SHALL BE OF THE TYPE INDICATED IN THE PRECEDING TABLE, WITH A MINIMUM COMPRESSIVE STRENGTH AT 28 DAYS OF 1,800 PSI AND SHALL CONFORM TO OSSC SECTION 2103.

MASONRY GROUT:
GROUT SHALL HAVE COMPRESSIVE STRENGTH AS INDICATED IN THE PRECEDING TABLE AND SHALL CONFORM TO OSSC SECTION 2103. GROUT SHALL CONSIST OF A MIXTURE OF CEMENTITIOUS MATERIALS AND AGGREGATE TO WHICH SUFFICIENT WATER HAS BEEN ADDED TO CAUSE THE MIXTURE TO FLOW WITHOUT SEGREGATION OF THE CONSTITUENTS. ALL CELLS CONTAINING VERTICAL BARS AND ALL BOND BEAMS SHALL BE FILLED WITH GROUT. FULLY GROUT ALL STRUCTURAL MASONRY WALLS UNLESS NOTED OTHERWISE.

THE MAXIMUM GROUT POUR HEIGHT SHALL BE 12'-8". CLEAN-OUTS ARE REQUIRED FOR ANY POUR HEIGHT GREATER THAN 5'-4". WHERE REQUIRED, CLEAN-OUTS SHALL BE LOCATED AT ALL CORES CONTAINING VERTICAL REINFORCEMENT AND AT A MAXIMUM OF 32" O.C. GROUT LIFTS GREATER THAN 5'-4" ARE LIMITED IN HEIGHT TO THE BOTTOM OF THE LOWEST BOND BEAM THAT IS MORE THAN 5'-4" ABOVE THE BOTTOM OF THE LIFT, PROVIDED THAT: 1) THE MASONRY HAS CURED FOR AT LEAST 4 HOURS, AND 2) THE GROUT SLUMP IS MAINTAINED BETWEEN 10 AND 11 INCHES. IF EITHER OF THESE TWO CONDITIONS ARE NOT MET, THEN THE MAXIMUM LIFT HEIGHT SHALL BE 5'-4". REFERENCE TYPICAL MASONRY DETAILS.

MASONRY REINFORCING STEEL:
REINFORCING SHALL CONFORM TO OSSC SECTION 2103.14. DEFORMED BARS SHALL BE ASTM A615 GRADE 60, AND SHALL BE SECURELY PLACED IN ACCORDANCE WITH ACI 530.1-11 SPECIFICATION SECTION 3.4. WELDED REINFORCEMENT SHALL CONFORM TO ASTM A706 GRADE 60. UNLESS NOTED OTHERWISE ON THE PLANS, THE MINIMUM WALL REINFORCEMENT SHALL BE AS FOLLOWS:

RUNNING BOND PATTERN		
WALL THICKNESS	**VERTICAL BARS**	**HORIZONTAL BARS (IN BOND BEAMS)**
6"	#5 @ 48" o.c.	#5 @ 48" o.c.
8"	#6 @ 48" o.c.	(2) #5 @ 32" o.c.
10"	#6 @ 48" o.c.	(2) #5 @ 32" o.c.
12"	#6 @ 48" o.c.	(2) #5 @ 24" o.c.

REINFORCING STEEL SHALL BE DETAILED IN ACCORDANCE WITH THE "ACI MANUAL OF STANDARD PRACTICE FOR DETAILING REINFORCED CONCRETE STRUCTURES," ACI 315. SHOP DRAWINGS SHALL INCLUDE ELEVATIONS OF ALL STRUCTURAL CMU WALLS SHOWING LOCATIONS OF BOND BEAMS, BARS, AND OTHER SPECIAL REINFORCEMENT.

BOND BEAMS WITH TWO #5 BARS HORIZONTALLY SHALL BE PROVIDED AT ALL FLOOR AND ROOF LINES AND AT THE TOP OF WALLS. STEP BOND BEAMS AS REQUIRED TO MATCH ROOF SLOPES. PROVIDE A BOND BEAM WITH TWO #5 BARS HORIZONTALLY ABOVE AND BELOW ALL OPENINGS, AND EXTEND THESE BARS 2'-0" PAST THE OPENING AT EACH SIDE. PROVIDE ONE BAR, MATCHING VERTICAL BAR SIZE, FOR THE FULL HEIGHT OF THE WALL AT EACH SIDE OF OPENINGS, WALL ENDS, AND INTERSECTIONS. DOWELS TO MASONRY WALLS SHALL BE EMBEDDED A MINIMUM OF 1'-0" OR HOOKED INTO THE SUPPORTING STRUCTURE AND BE OF THE SAME SIZE AND SPACING AS WALL REINFORCING. PROVIDE CORNER BARS TO MATCH THE HORIZONTAL WALL REINFORCING AT WALL INTERSECTIONS. LAP ALL REINFORCING BARS AS FOLLOWS UNLESS NOTED OTHERWISE ON DRAWINGS:

BR|IC
ARCHITECTURE, INC.
1233 NW NORTHRUP STREET, SUITE 100
PORTLAND, OR 97209 T 503 595 4900

New Middle School / High School
Seaside School District
1801 S. FRANKLIN STREET, SEASIDE, OREGON 97138
t: 503-738-5591

kpff
111 SW Fifth Ave., Suite 2500
Portland, OR 97204
O: 503.227.3251
F: 503.227.7980
www.kpff.com
10021700078R17

STRUCTURAL REGISTERED PROFESSIONAL ENGINEER 15,773 OREGON JAN. 21, 1992 JERALD L. ABDIE
EXPIRES 12-31-19

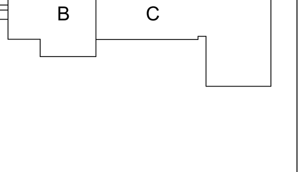

phase	BP2-PERMIT SET
date	6/15/2018
revisions	
BP2 - ADD 1	07/05/2018
project #	17007

GENERAL STRUCTURAL NOTES

S0.02

GENERAL STRUCTURAL NOTES CONT.

TYP. LAP SPLICE LENGTH SCHEDULE (IN.)				
f'm=2,000 PSI	CASE 1	CASE 2		
BAR SIZE	ALL BLOCK	8" BLOCK	10" BLOCK	12" BLOCK
#3	16	12	12	12
#4	29	12	12	12
#5	45	19	15	12
#6	54	37	29	23
#7	63	51	40	32
#8	72	72	61	49
#9	81	81	78	63

TYP. LAP SPLICE LENGTH SCHEDULE (IN.)				
f'm=2,500 PSI	CASE 1	CASE 2		
BAR SIZE	ALL BLOCK	8" BLOCK	10" BLOCK	12" BLOCK
#3	15	12	12	12
#4	26	12	12	12
#5	41	17	14	12
#6	54	33	26	21
#7	63	46	35	29
#8	72	71	54	44
#9	81	81	70	56

NOTES:

CASE 1: BARS LOCATED NEAR THE FACE OF BLOCK WITH ONLY MINIMUM COVER OR CELLS WITH MORE THAN (1) BAR.

CASE 2: SINGLE BARS LOCATED AT THE CENTER OF A CELL.

1. FOR EPOXY COATED BARS, MULTIPLY LAP LENGTHS BY 1.5.

2. MAXIMUM OF (2) BARS IN (1) CELL ((4) AT LAP SPLICE.)

3. AT CONTRACTOR'S OPTION: PROVIDE MECHANICAL SPLICES FOR #8 AND #9 BARS.

4. STAGGER HORIZONTAL BOND BEAM LAP SPLICES 24" MIN.

REINFORCING STEEL COVER	
USE	MINIMUM COVER (TO OUTSIDE FACE OF MASONRY)
MASONRY FACE NOT EXPOSED TO EARTH OR WEATHER	1 1/2"
MASONRY FACE EXPOSED TO EARTH OR WEATHER	1 1/2" (#5 AND SMALLER)
	2" (#6 AND LARGER)

MASONRY ACCESSORIES:

ALL ANCHORS SHALL BE INSTALLED IN STRICT CONFORMANCE WITH MANUFACTURER'S RECOMMENDATIONS. REINFORCING IN NEW OR EXISTING MASONRY SHALL NOT BE CUT DURING INSTALLATION. ALL ANCHORS EXPOSED TO EARTH OR WEATHER SHALL BE PROTECTED FROM CORROSION BY HOT-DIP GALVANIZING OR USE OF STAINLESS STEEL.

MASONRY ANCHORS	
TYPE	APPROVED ANCHORS
EXPANSION	DEWALT POWER-STUD+ (IC ESR-2966)
SCREW	SIMPSON TITEN HD (ICC ESR-1056)
EPOXY ADHESIVE	HILTI HIT HY-70 (ICC ESR-2682)

NOTE:

1. MINIMUM GROUT COVER BETWEEN REINFORCEMENT AND INSIDE FACE OF CELL SHALL BE 1/4" FOR FINE GROUT AND 1/2" FOR COURSE GROUT.

STRUCTURAL STEEL:

STRUCTURAL STEEL SHALL BE:

STRUCTURAL STEEL	
MATERIAL GRADE	SHAPE
ASTM A992, GRADE 50	WIDE FLANGE SHAPES
ASTM A572, GRADE 50	PLATES WHERE NOTED
ASTM A36	CHANNELS, PLATES AND ANGLES, EXCEPT AS NOTED
ASTM A500, GRADE B (FY=46KSI)	HOLLOW STRUCTURAL SECTIONS (TUBES)
ASTM A53, GRADE B (FY=35 KSI)	PIPES

DESIGN, FABRICATION, AND ERECTION SHALL BE IN ACCORDANCE WITH THE "AISC SPECIFICATION FOR THE DESIGN, FABRICATION, AND ERECTION OF STRUCTURAL STEEL FOR BUILDINGS" WITH "COMMENTARY" AND THE "CODE OF STANDARD PRACTICE", WITH EXCEPTIONS NOTED IN SPECIFICATIONS. REFERENCE SPECIFICATIONS FOR ADDITIONAL REQUIREMENTS FOR MEMBERS PART OF THE SEISMIC FORCE RESISTING SYSTEM (SFRS).

BOLTS SHALL CONFORM TO THE ASTM AND RCSC SPECIFICATIONS FOR JOINTS USING A325 OR A490 HIGH STRENGTH BOLTS. BOLTS SHALL BE SNUG-TIGHT UNLESS NOTED OTHERWISE. HIGH STRENGTH BOLTS USED AS PART OF THE SEISMIC FORCE RESISTING SYSTEM (SFRS) NOTED ON THE DRAWINGS AND DETAILS SHALL BE FULLY TENSIONED AND ALL FAYING SURFACES SHALL BE PREPARED AS REQUIRED FOR CLASS A OR BETTER SLIP-CRITICAL JOINTS.

WELDING SHALL CONFORM TO THE AWS CODES FOR ARC AND GAS WELDING IN BUILDING CONSTRUCTION. WELDING SHALL BE PERFORMED IN ACCORDANCE WITH A WELDED PROCEDURE SPECIFICATION (WPS) AS REQUIRED IN AWS D1.1 AND APPROVED BY THE STRUCTURAL ENGINEER. THE WPS VARIABLES SHALL BE WITHIN THE PARAMETERS ESTABLISHED BY THE FILLER-METAL MANUFACTURER. FOR MEMBERS INCLUDED IN THE SEISMIC FORCE RESISTING SYSTEM (SFRS), REQUIREMENTS OF AWS D1.8 (SEISMIC SUPPLEMENT) SHALL APPLY

ALL WELDS USED IN MEMBERS AND CONNECTIONS THAT ARE PART OF THE SEISMIC FORCE RESISTING SYSTEM (SFRS) SHALL BE MADE WITH A FILLER METAL THAT HAS A MINIMUM CHARPY V-NOTCH (CVN) TOUGHNESS OF 20 FT-LBS AT 0 DEGREES F, AS DETERMINED BY AWS CLASSIFICATION OR MANUFACTURER CERTIFICATION. ALL COMPLETE JOINT PENETRATION WELDS DESIGNATED AS DEMAND CRITICAL SHALL BE MADE WITH FILLER METAL THAT HAS A MINIMUM CVN TOUGHNESS OF 20 FT-LBS AT MINUS 20 DEGREES F, AND 40 FT-LBS AT 70 DEGREES F. FOR COMPLETE JOINT PENETRATION WELDS ASSOCIATED WITH MEMBER SPLICES AND CONNECTIONS NOT PART OF THE SFRS, WELDS SHALL BE MADE WITH FILLER METAL THAT HAS A MINIMUM CVN TOUGHNESS OF 20 FT-LBS AT 40 DEGREES F.

FOR MEMBERS AND CONNECTIONS THAT ARE PART OF THE SEISMIC FORCE RESISTING SYSTEM, DISCONTINUITIES CREATED BY ERRORS OR BY FABRICATION OR ERECTION OPERATIONS, SUCH AS TACK WELDS, ERECTION AIDS, AIR-ARC GOUGING, AND FLAME CUTTING, SHALL BE REPAIRED AS REQUIRED BY THE STRUCTURAL ENGINEER.

WELDS SHALL BE MADE USING E70XX ELECTRODES AND SHALL BE 3/16" MINIMUM, UNLESS OTHERWISE NOTED. WELDING SHALL BE BY AWS CERTIFIED WELDERS.

PROVIDE WEEP HOLES AT EXTERIOR CLOSED SECTIONS WHERE MOISTURE MAY ACCUMULATE.

STEEL DECK:

STEEL FLOOR DECK SHALL BE A COMPOSITE TYPE WITH RIBS AT 12" o.c. OF THE SIZE AND GAUGE INDICATED ON THE PLANS. STEEL FLOOR DECK SHALL BE VENTED AS REQUIRED BY THE DECK MANUFACTURER BASED ON THE FLOOR COVERING OR COATING BEING USED. STEEL ROOF DECK SHALL BE 1-1/2" TYPE B OR 3" TYPE N OF THE GAUGE SHOWN ON THE PLANS. STEEL DECK SHALL CONFORM TO ASTM A653 DESIGNATION SS, GRADE 50 (Fy = 50 KSI). THE GALVANIZED COATING SHALL CONFORM TO ASTM A653, G 60 (G90 WHERE LEFT PERMANENTLY EXPOSED TO WEATHER).

MINIMUM DECK GAUGES ARE SHOWN ON PLANS AND ARE BASED ON 3-SPAN, UN-SHORED CONDITIONS. FOR OTHER SPAN CONDITIONS, DECK MANUFACTURER SHALL EVALUATE AND INDICATE SHORING AS REQUIRED. MINIMUM PROPERTIES SHALL BE AS FOLLOWS:

FLOOR DECK PROPERTIES			
DECK TYPE & GAUGE	I (IN^4/FT)	+S (IN^3/FT)	-S (IN^3/FT)
W2 - 20 GAUGE	0.422	0.323	0.333
W2 - 18 GAUGE	0.564	0.471	0.481
W3 - 20 GAUGE	0.907	0.510	0.528
W3 - 18 GAUGE	1.213	0.752	0.768

ROOF DECK PROPERTIES			
DECK TYPE & GAUGE	I (IN^4/FT)	+S (IN^3/FT)	-S (IN^3/FT)
B - 20 GAUGE	0.219	0.230	0.237
B - 18 GAUGE	0.302	0.314	0.331
N - 20 GAUGE	0.908	0.443	0.531
N - 18 GAUGE	1.267	0.652	0.735

WELDED OR MECHANICAL DECK CONNECTIONS SHALL BE PROVIDED AT ALL SUPPORTS AND SIDELAPS AS INDICATED ON THE PLANS. DECK DESIGN IS BASED ON VERCO IN ACCORDANCE WITH IAPMO ES EVALUATION REPORT ER-0217. EQUAL PRODUCT(S) MAY BE SUBMITTED FOR REVIEW AND APPROVAL BY EOR.

DO NOT HANG OR SUSPEND STRUCTURAL ITEMS DIRECTLY FROM ROOF DECK. NON-STRUCTURAL ITEMS SUSPENDED FROM THE DECK SHALL BE REVIEWED AND APPROVED BY THE ARCHITECT AND STRUCTURAL ENGINEER PRIOR TO INSTALLATION.

STEEL FRAMING DEFLECTION DURING CONCRETE OVER METAL DECK PLACEMENT:

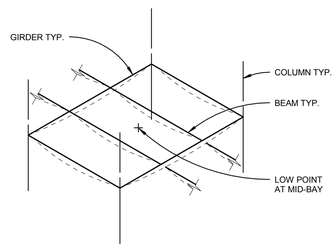

METAL DECK, BEAMS, AND GIRDERS WILL DEFLECT DURING PLACEMENT OF CONCRETE. CONTRACTOR SHALL ACCOUNT FOR THIS DISPLACEMENT BY PROVIDING ADDITIONAL CONCRETE AT CENTER OF SPANS. THE INTENT IS TO CONSTRUCT LEVEL FLOORS WITHIN EACH BAY, OR STRAIGHT SLOPES ON ROOF BAYS, AND TO PROVIDE THE MINIMUM THICKNESS OF CONCRETE OVER METAL DECK THAT IS CALLED FOR PLANS.

STEEL JOISTS:

STEEL JOISTS AND JOIST GIRDERS SHALL BE DESIGNED TO RESIST THE LOADS INDICATED ON THE DRAWINGS AND SHALL CONFORM TO THE REQUIREMENTS OF THE STEEL JOIST INSTITUTE (SJI) STANDARDS. THE STEEL JOIST MANUFACTURER SHALL BE APPROVED BY SJI. THE CONTRACTOR SHALL COORDINATE CONNECTIONS TO JOISTS FOR SEISMIC RESTRAINTS OF MECHANICAL, PLUMBING, AND ELECTRICAL EQUIPMENT, MACHINERY, AND ASSOCIATED PIPING. JOIST MANUFACTURER SHALL VERIFY THAT CONNECTION METHODS AND SEISMIC LOADS CONFORM TO THE JOIST DESIGN. PROVIDE BRIDGING IN CONFORMANCE WITH SJI STANDARDS. JOISTS AND BRIDGING SHALL BE CAPABLE OF RESISTING A MINIMUM WIND UPLIFT OF 10 PSF (0.6W ASD), UNLESS OTHERWISE NOTED ON THE DRAWINGS. IN ADDITION TO THE LOADS NOTED ON THE DRAWINGS, ALL JOISTS SHALL BE CAPABLE OF SUPPORTING A 500 POUND CONCENTRATED LOAD PLACED AT ANY POINT ALONG THE TOP AND BOTTOM CHORD.

BRIC ARCHITECTURE, INC.
1233 NW NORTHRUP STREET, SUITE 100
PORTLAND, OR 97209 T 503.595.4900

New Middle School / High School
Seaside School District
1801 S. FRANKLIN STREET, SEASIDE, OREGON 97138
t: 503-738-5591

kpff
111 SW Fifth Ave., Suite 2500
Portland, OR 97204
O: 503.227.3251
F: 503.227.7980
www.kpff.com
10021700078R17

REGISTERED PROFESSIONAL ENGINEER 15773 OREGON JAN. 21, 1986 GERALD L. KOSTE
EXPIRES 12-31-19

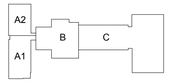

phase	BP2-PERMIT SET
date	6/15/2018
revisions	
project #	17007

GENERAL STRUCTURAL NOTES CONT.

S0.03

6/14/2018 12:08:45 PM
C:\1REVIT\100217000078_Courtney.Bradshaw@kpff.com.rvt

SPECIAL INSPECTION AND TESTING

STATEMENT OF SPECIAL INSPECTION NOTES:

1. SPECIAL INSPECTIONS SHALL CONFORM TO SECTION 1705 OF THE 2014 OSSC, CONTRACT DOCUMENTS AND APPROVED SUBMITTALS. REFER TO TABLES 1 THROUGH 5 FOR SPECIAL INSPECTION AND TABLES 6, 7 AND 7A FOR TESTING REQUIREMENTS.

2. SPECIAL INSPECTIONS AND ASSOCIATED TESTING SHALL BE PERFORMED BY AN APPROVED ACCREDITED INDEPENDENT AGENCY MEETING THE REQUIREMENTS OF ASTM E329 (MATERIALS). THE INSPECTION AND TESTING AGENCY SHALL FURNISH TO THE ARCHITECT A COPY OF THEIR SCOPE OF ACCREDITATION. SPECIAL INSPECTORS SHALL BE APPROVED BY THE BUILDING OFFICIAL. WELDING INSPECTORS SHALL BE QUALIFIED PER SECTION 6.1.4.1.1 OF AWS D1.1.

3. THE SPECIAL INSPECTOR SHALL OBSERVE THE INDICATED WORK FOR COMPLIANCE WITH THE APPROVED CONSTRUCTION DOCUMENTS. ALL DISCREPANCIES SHALL BE BROUGHT TO THE ATTENTION OF THE CONTRACTOR FOR CORRECTION AND NOTED IN THE INSPECTION REPORTS.

4. THE SPECIAL INSPECTOR AND GEOTECHNICAL ENGINEER SHALL FURNISH INSPECTION REPORTS FOR EACH INSPECTION TO THE BUILDING OFFICIAL, STRUCTURAL ENGINEER, ARCHITECT, CONTRACTOR, AND OWNER. THE SPECIAL INSPECTION AGENCY SHALL SUBMIT A FINAL REPORT STATING THAT THE WORK REQUIRING SPECIAL INSPECTION WAS INSPECTED AND IS IN CONFORMANCE WITH THE APPROVED CONSTRUCTION DOCUMENTS AND THAT ALL DISCREPANCIES NOTED IN THE INSPECTION REPORTS HAVE BEEN CORRECTED.

5 FOR STEEL INSPECTIONS PER AISC 360 AND 341 (TABLES 2A AND 4A):
QUALITY ASSURANCE (QA) IS REQUIRED FOR EACH ITEM IN TABLES UNLESS SPECIFICALLY NOTED OTHERWISE.
QUALITY CONTORL (QC) TO BE PROVIDED BY THE FABRICATOR, ERECTOR OR OTHER RESPONSIBLE CONTRACTOR AS APPLICABLE. CONTRACTOR AND SPECIAL INSPECTOR TO DOCUMENT QUALITY CONTROL AS REQUIRED IN AISC 360 SECTION N3 AND AISC 341 SECTION J2.

6 INSPECTION TYPES
CONTINUOUS : THE FULL-TIME OBSERVATION OF WORK REQUIRING SPECIAL INSPECTION BY AN APPROVED SPECIAL INSPECTOR WHO IS PRESENT IN THE AREA WHERE THE WORK IS BEING PERFORMED.
PERIODIC : THE PART-TIME OR INTERMITTENT OBSERVATION OF WORK REQUIRING SPECIAL INSPECTION BY AN APPROVED SPECIAL INSPECTOR WHO IS PRESENT IN THE AREA WHERE THE WORK HAS BEEN OR IS BEING PERFORMED AND AT THE COMPLETION OF THE WORK.
OBSERVE : OBSERVE THESE FUNCTIONS ON A RANDOM, DAILY BASIS. OPERATIONS NEED NOT BE DELAYED PENDING OBSERVATIONS.
PERFORM : INSPECTIONS SHALL BE PERFORMED PRIOR TO THE FINAL ACCEPTANCE OF THE ITEM.

7 PERFORM INSPECTION PRIOR TO FINAL ACCEPTANCE OF THE ITEM FOR TEN WELDS TO BE MADE BY A GIVEN WELDER, WITH THE WELDER DEMONSTRATING UNDERSTANDING OF REQUIREMENTS AND POSSESSION OF SKILLS AND TOOLS TO VERIFY THESE ITEMS, THE PERFORM DESIGNATION OF THIS TASK SHALL BE REDUCED TO OBSERVE, AND THE WELDER SHALL PERFORM THIS TASK. SHOULD THE INSPECTOR DETERMINE THAT THE WELDER HAS DISCONTINUED PERFORMANCE OF THIS TASK, THE TASK SHALL BE RETURNED TO PERFORM UNTIL SUCH TIME AS THE INSPECTOR HAS RE-ESTABLISHED ADEQUATE ASSURANCE THAT THE WELDER WILL PERFORM THE INSPECTION TASKS LISTED

8 SPECIAL INSPECTION OF MECHANICAL POST INSTALLED ANCHORS SHALL BE IN STRICT CONFORMANCE WITH THE ICC REPORT AND MANUFACTURERS INSTALLATION REQUIREMENTS. ANCHOR INSTALLERS SHALL BE QUALIFIED AS REQUIRED BY JURISDICTION REQUIREMENTS.
- INSPECTION REPORTS SHALL IDENTIFY NAMES OF INSTALLERS.
- SPECIAL INSPECTOR SHALL PROVIDE DOCUMENTATION AT THE END OF ANCHOR INSTALLATIONS STATING THAT THE ANCHORS WERE INSPECTED PER APPROVED ANCHOR EVAULATION REPORT.

9 **TABLE 7 ABBREVIATIONS:**
NDT - NON-DESTRUCTIVE TESTING
CJP - COMPLETE JOINT PENETRATION
MT - MAGNETIC PARTICLE TESTING
RBS - REDUCED BEAM SECTION

10 DOCUMENT (D): INDICATES CONTRACTOR AND SPECIAL INSPECTOR TO PROVIDE DOCUMENTATION IN ACCORDANCE WITH AISC 341.

CONTRACTOR RESPONSIBILITY:

THE CONTRACTOR RESPONSIBLE FOR THE CONSTRUCTION OF THE MAIN WIND-OR SEISMIC-FORCE-RESISTING SYSTEM, OR A WIND-OR SEISMIC-RESISTING COMPONENT LISTED IN TABLES 4, 4A, 5, 7, 7A, N2, AND N4 SHALL SUBMIT A WRITTEN STATEMENT OF RESPONSIBILITY TO THE BUILDING OFFICIAL AND THE OWNER PRIOR TO THE COMMENCEMENT OF WORK ON THE SYSTEM OR COMPONENT. THE CONTRACTOR'S STATEMENT OF RESPONSIBILITY SHALL CONTAIN THE FOLLOWING:

ACKNOWLEDGEMENT OF AWARENESS OF THE SPECIAL REQUIREMENTS CONTAINED IN THE STATEMENT OF SPECIAL INSPECTIONS.

1. ACKNOWLEDGEMENT THAT CONTROL WILL BE EXERCISED TO OBTAIN CONFORMANCE WITH THE CONSTRUCTION DOCUMENTS APPROVED BY THE BUILDING OFFICIAL.

2. PROCEDURES FOR EXERCISING CONTROL WITHIN THE CONTRACTOR'S ORGANIZATION, THE METHOD AND FREQUENCY OF REPORTING AND DISTRIBUTION OF THE REPORTS.

3. IDENTIFICATION AND QUALIFICATIONS OF THE PERSON(S) EXERCISING SUCH CONTROL AND THEIR POSITION(S) IN THE ORGANIZATION.

TABLE 1 - REQUIRED GEOTECHNICAL SPECIAL INSPECTIONS

SYSTEM OR MATERIAL	INSPECTION				REMARKS
	OSSC CODE REFERENCE	CODE OR STANDARDS REFERENCE	FREQUENCY (NOTE 6)		
			CONTINUOUS	PERIODIC	
SOILS					
VERIFY MATERIALS BELOW FOOTINGS ARE ADEQUATE TO ACHIEVE THE DESIGN BEARING CAPACITY	1705.6	GEOTECHNICAL REPORT		X	BY THE GEOTECHNICAL ENGINEER
VERIFY EXCAVATIONS ARE EXTENDED TO PROPER DEPTH AND HAVE REACHED PROPER MATERIAL				X	
PERFORM CLASSIFICATION AND TESTING OF CONTROLLED FILL MATERIALS				X	
VERIFY USE OF PROPER MATERIALS, DENSITIES AND LIFT THICKNESSES DURING PLACEMENT AND COMPACTION OF CONTROLLED FILL			X		
PRIOR TO PLACEMENT OF CONTROLLED FILL, OBSERVE SUBGRADE AND VERIFY THAT SITE HAS BEEN PREPARED PROPERLY				X	
MECHANICALLY STABILIZED EARTH (MSE) RETAINING WALLS					
INSTALLATION	1707.1	GEOTECHNICAL AND ICC EVALUATION REPORTS	X		BY THE GEOTECHNICAL ENGINEER SPECIAL INSPECTIONS APPLY TO VERIFYING MODULAR UNIT PRODUCT NAME, TYPE, AND DIMENSIONS, FOUNDATION PREPARATION, MODULAR UNIT PLACEMENT, INCLUDING ALIGNMENT AND INCLINATION, GEOSYNTHETIC REINFORCEMENT PRODUCT NAME, TYPE, AND PLACEMENT, BACKFILL PLACEMENT AND COMPACTION, AND DRAINAGE PROVISIONS
GABION WALLS					
INSTALLATION	1707.1	GEOTECHNICAL REPORT	X		BY THE GEOTECHNICAL ENGINEER SPECIAL INSPECTIONS APPLY TO VERIFYING GABION PRODUCT NAME, TYPE AND DIMENSIONS, FOUNDATION PREPARATION, GABION PLACEMENT INCLUDING ALIGNMENT AND INCLINATION, STONE FILL TYPE AND PLACEMENT, BACKFILL PLACEMENT AND COMPACTION AND DRAINAGE PROVISIONS
GEOSYNTHETIC WALLS					
INSTALLATION	1707.1	GEOTECHNICAL REPORT	X		BY THE GEOTECHNICAL ENGINEER SPECIAL INSPECTIONS APPLY TO VERIFYING GEOSYNTHETIC MATERIAL, PRODUCT NAME, TYPE AND DIMENSIONS, FOUNDATION PREPARATION, GEOSYNTHETIC PLACEMENT INCLUDING ALIGNMENT AND INCLINATION, BACKFILL PLACEMENT AND COMPACTION AND DRAINAGE PROVISIONS

TABLE 2 - REQUIRED STRUCTURAL SPECIAL INSPECTIONS

SYSTEM OR MATERIAL	INSPECTION				REMARKS
	OSSC CODE REFERENCE	CODE OR STANDARD REFERENCE	FREQUENCY (NOTE 6)		
			CONTINUOUS	PERIODIC	
FABRICATORS					
FABRICATORS	1704.2.5			X	SPECIAL INSPECTION IS REQUIRED FOR STRUCTURAL LOAD-BEARING MEMBERS AND ASSEMBLIES FABRICATED ON THE PREMISES OF A FABRICATOR'S SHOP PER TABLE 2 AND AS REQUIRED ELSEWHERE IN THE SPECIAL INSPECTION PROGRAM. THE SPECIAL INSPECTOR SHALL VERIFY THAT THE FABRICATOR MAINTAINS DETAILED FABRICATION AND QUALITY CONTROL PROCEDURES AND SHALL REVIEW FOR COMPLETENESS AND ADEQUACY RELATIVE TO THE CODE REQUIREMENT. REFERENCE SECTION 1704.2.5.2 FOR APPROVED FABRICATOR EXCEPTION.
DEFERRED SUBMITTALS					
DEFERRED SUBMITTALS			X	X	SPECIAL INSPECTION REQUIREMENTS FOR DEFERRED SUBMITTAL ITEMS TO BE SPECIFIED BY THE SYSTEMS ENGINEER AND INCLUDED WITH DEFERRED SUBMITTAL DOCUMENTS.
CONCRETE					
GENERAL	1705.3 1901.4	ACI 318 1.3			SPECIAL INSPECTIONS OF CONCRETE SHALL CONFORM TO THE REQUIREMENTS OF SECTION 1705.3 OF THE OSSC AND SECTION 1.3 OF ACI 318.
REINFORCING STEEL	1910.4 1901.3.2	ACI 318 3.5 ACI 318 7.1 TO 7.7		X	REINFORCING TO COMPLY WITH ALL CODE PROTECTION, SPACING AND TOLERANCE LIMITS.
WELDING REINFORCING STEEL	1705.2.2 1903.1	AWS D1.4 ACI 318: 3.5.2			
1. VERIFICATION OF WELDABILITY OF REINFORCING STEEL OTHER THAN ASTM A 706				X	
2. REINFORCING STEEL OF SPECIAL STRUCTURAL WALLS OF CONCRETE AND SHEAR REINFORCMENT			X		
3. SHEAR REINFORCEMENT			X		
4. OTHER REINFORCING STEEL				X	
PLACEMENT OF CAST-IN-PLACE BOLTS	1908.5 1909.1		X		ALL BOLTS VISUALLY INSPECTED
VERIFYING USE OF REQUIRED MIX DESIGN(S)	1904.2 1910.2 1910.3	ACI 318, CH. 4 ACI 318 5.2-5.4		X	
CONCRETE PLACEMENT, NON-SHRINK GROUT		ACI 318 5.9-5.10	X		
CONCRETE PLACEMENT AT COMPOSITE SLABS		ASCE 9, CH. 3	X		
CONCRETE CURING	1910.9	ACI 318 5.11-5.13		X	
ERECTION OF PRECAST MEMBERS		ACI 318 CH. 16		X	ALL CONNECTIONS VISUALLY INSPECTED. REFER TO ANCHOR BOLT AND WELDING REQUIREMENTS
VERIFICATION OF FORMWORK		ACI 318 6.1.1		X	SPECIAL INSPECTIONS APPLY TO SHAPE, LOCATION AND DIMENSIONS OF THE CONCRETE MEMBER BEING FORMED
EMBEDDED ITEMS IN CONCRETE				X	ALL NON-STRUCTRAL EMBEDDED ITEMS, SUCH AS CONDUITS, PIPES AND SLEEVES, SHALL BE REVIEWED FOR CONFORMANCE WITH STRUCTURAL DOCUMENTS FOR SIZE, SPACING, LOCATION, EDGE DISTANCE AND TRIM REINFORING.
REINFORCING STEEL MECHANICAL COUPLERS, TERMINATORS AND FORMSAVERS		ICC EVALUATION REPORTS		X	
MASONRY LEVEL C QUALITY ASSURANCE					
1. VERIFY COMPLIANCE WITH THE CONTRACT DOCUMENTS AND APPROVED SUBMITTALS		TMS 602 ART. 1.5		X	
2. VERIFY THAT THE FOLLOWING ARE IN COMPLIANCE:					
A. PROPORTIONS OF SITE-MIXED MORTAR, GROUT AND PRESTRESSING GROUT FOR BONDED TENDONS		TMS 602 ART. 2.1, 2.6 A, 2.6 B, 2.6 C, 2.4 G.1.b		X	
B. GRADE, TYPE, AND SIZE OF REINFORCEMENT AND ANCHOR BOLTS, AND PRESTRESSING TENDONS AND ANCHORAGES		TMS 402 SEC. 1.16 TMS 602 Art. 2.4, 3.4		X	
C. PLACEMENT OF MASONRY UNITS AND CONSTRUCTION OF MORTAR JOINTS		TMS 602 ART. 3.3 B		X	
D. PLACEMENT OF REINFORCEMENT, CONNECTORS, AND PRESTRESSING TENDONS AND ANCHORAGES		TMS 402 SEC. 1.16 TMS 602 Art 3.2 E, 3.4, 3.6 A	X		
E. GROUT SPACE PRIOR TO GROUTING		TMS 602 ART. 3.2 D, 3.2 F	X		
F. PLACEMENT OF GROUT AND PRESTRESSING GROUT FOR BONDED TENDONS		TMS 602 ART. 3.5, 3.6 C	X		
G. SIZE AND LOCATION OF STRUCTURAL ELEMENTS		TMS 602 ART. 3.3 F		X	
H. TYPE, SIZE, AND LOCATION OF ANCHORS INCLUDING OTHER DETAILS OF ANCHORAGE OF MASONRY TO STRUCTURAL MEMBERS, FRAMES OR OTHER CONSTRUCTION		TMS 402 SEC. 1.16.4.3, 1.17.1	X		
I. WELDING OF REINFORCEMENT		TMS 402 SEC. 2.1.7.7.2, 3.3.3.4(c), 8.3.3.4(b)	X		
J. PREPARATION, CONSTRUCTION, AND PROTECTION OF MASONRY DURING COLD WEATHER (TEMPERATURE BELOW 40F (4.4C)) OR HOT WEATHER (TEMPERATURE ABOVE 90F (32.2C))		TMS 602 ART. 1.8 C, 1.8 D		X	
K. APPLICATION AND MEASUREMENT OF PRESTRESSING FORCE		TMS 602 ART. 3.6B	X		
L. PLACEMENT OF AAC MASONRY UNITS AND CONSTRUCTION OF THIN-BED MORTAR JOINTS		TMS 602 ART. 3.3, B.8	X		
M. PROPERTIES OF THIN-BED MORTAR FOR AAC MASONRY		TMS 602 ART. 2.1, C.1	X		
5. OBSERVE PREPARATION OF GROUT SPECIMENS, MORTAR SPECIMENS, AND/OR PRISMS		TMS 602 ART 1.4 B.2.a.3, 1.4 B.2.b.3, 1.4 B.2.c.3, 1.4 B.3, 1.4 B.4	X		

6/14/2018 12:08:47 PM
C:\1REVIT\10021700078_Courtney.Bradshaw@kpff.com.rvt

BR|IC ARCHITECTURE, INC.
1233 NW NORTHRUP STREET, SUITE 100
PORTLAND, OR 97209 T 503 595 4900

New Middle School / High School
Seaside School District
1801 S. FRANKLIN STREET, SEASIDE, OREGON 97138
t: 503-738-5591

kpff
111 SW Fifth Ave., Suite 2500
Portland, OR 97204
O: 503.227.3251
F: 503.227.7980
www.kpff.com
10021700078R17

STRUCTURAL REGISTERED PROFESSIONAL ENGINEER 15,773 OREGON JAN. 21, 1992 JERALD L. ABDIE
EXPIRES 12-31-19

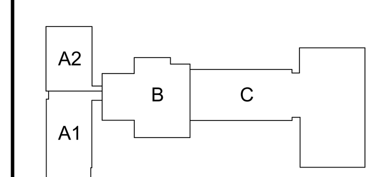

phase BP2-PERMIT SET
date 6/15/2018
revisions
project # 17007

SPECIAL INSPECTION AND TESTING

S0.04

SPECIAL INSPECTION AND TESTING CONT.

TABLE 2 - REQUIRED STRUCTURAL SPECIAL INSPECTIONS CONT.

SYSTEM OR MATERIAL	INSPECTION: OSSC CODE REFERENCE	INSPECTION: CODE OR STANDARD REFERENCE	FREQUENCY (NOTE 6): CONTINUOUS	FREQUENCY (NOTE 6): PERIODIC	REMARKS
STEEL					
REFERENCE TABLE 2A FOR REQUIRED SPECIAL INSPECTIONS FOR STEEL					
STAINLESS STEEL					
FABRICATION OF STAINLESS STEEL ELEMENTS	1705.1.1			X	REFER TO INSPECTION OF FABRICATOR REQUIREMENTS
MATERIAL VERIFICATION OF STAINLESS STEEL	1705.1.1			X	CERTIFIED MILL TEST REPORTS
MATERIAL VERIFICATION OF BOLTS	1705.1.1			X	MANUFACTURER'S CERTIFIED TEST REPORTS
MATERIAL VERIFICATION OF WELD FILLER METALS	1705.1.1	AWS D1.6 SECTION 6		X	MANUFACTURER'S CERTIFIED TEST REPORTS
VERIFYING USE OF PROPER WPS'S				X	RETAIN A RECORD OF WELDING PROCEDURE SPECIFICATIONS
VERIFYING WELDER QUALIFICATIONS				X	RETAIN A RECORD OF QUALIFICATION CARDS
COMPLETE AND PARTIAL PENETRATION GROOVE WELDS			X		ALL WELDS VISUALLY INSPECTED PER AWS D1.6 6.28.1
MULTIPASS FILLET WELDS			X		
SINGLE PASS FILLET WELDS				X	
COLD-FORMED STEEL FRAMING					
MATERIAL VERIFICATION OF WELD FILLER METALS		AWS D1.3 SECTION 7		X	MANUFACTURER'S CERTIFIED TEST REPORTS
VERIFYING USE OF PROPER WPS'S				X	RETAIN A RECORD OF WELDING PROCEDURE SPECIFICATIONS
VERIFYING WELDER QUALIFICATIONS	1705.2.2.1			X	RETAIN A RECORD OF QUALIFICATION CARDS
COLD FORMED ROOF AND FLOOR DECKS	1705.2.2.1.1	AWS D1.3		X	WELDING INSPECTION AND INSPECTOR QUALIFICATION
WELDED FRAMING CONNECTIONS	1705.2.2.1	AWS D1.3 SECTION 7		X	ALL WELDS VISUALLY INSPECTED PER AWS D1.3 7.1
POST INSTALLED CONCRETE ANCHORS					
POST INSTALLED ANCHORS INSTALLATION IN HARDENED CONCRETE AND COMPLETED MASONRY	1908.5 1909.1	ACI 318: 1.3, 3.8.6		X (NOTE 8)	INSPECTION REQUIREMENTS PER ICC EVALUATION REPORT

TABLE 2A - REQUIRED STRUCTURAL STEEL SPECIAL INSPECTIONS

SYSTEM OR MATERIAL	INSPECTION: OSSC CODE REFERENCE	INSPECTION: CODE OR STANDARD REFERENCE	INSPECTION (NOTES 5 AND 6): CONTINUOUS	PERIODIC	OBSERVE	PERFORM	REMARKS
STEEL							
CONTRACTOR QUALITY CONTROL REQUIREMENTS		AISC 360 CHAPTER N			X	X	CONTRACTOR TO PROVIDE QUALITY CONTROL FOR ALL ITEMS INDICATED TO BE OBSERVE AND/OR PERFORM IN TABLE BELOW
STEEL FABRICATION							
FABRICATION OF STRUCTURAL ELEMENTS	1704.2.5.2	AISC 360 N2		X			REFER TO INSPECTION OF FABRICATOR REQUIREMENTS
MATERIAL VERIFICATION OF STRUCTURAL STEEL	1705.2.1 2203.1 TABLE 1705.2	ASTM A6 ASTM STANDARDS SPECIFIED IN CONSTRUCTION DOCUMENTS AISC 360 A3.1 AISC 360 N3.2		X			CERTIFIED MILL TEST REPORTS
FOR OTHER STEEL, IDENTIFICATION MARKINGS TO CONFORM TO ASTM STANDARDS SPECIFIED IN THE APPROVED CONSTRUCTION DOCUMENTS	TABLE 1705.2	APPLICABLE ASTM STANDARDS		X			MANUFACTURER'S CERTIFIED TEST REPORTS
MATERIAL VERIFICATION OF HIGH STRENGTH BOLTS, NUTS, AND WASHERS		AISC 360 A3.3 AISC 360 N3.2 ASTM STANDARDS SPECIFIED IN CONSTRUCTION DOCUMENTS RCSC 2.1		X			MANUFACTURER'S CERTIFIED TEST REPORTS
MATERIAL VERIFICATION OF ANCHOR BOLTS AND THREADED RODS		AISC 360 A3.4 AISC 360 N3.2 ASTM STANDARDS SPECIFIED IN CONSTRUCTION DOCUMENTS		X			MANUFACTURER'S CERTIFIED TEST REPORTS
MATERIAL VERIFICATION OF WELD FILLER METALS	TABLE 1705.2	AISC 360 A3.5 AISC 360 N3.2 APPLICABLE AWS A5 DOCUMENTS		X			MANUFACTURER'S CERTIFIED TEST REPORTS
STRUCTURAL STEEL WELDING							
VERIFYING USE OF PROPER WPS'S		AISC 360 N3.2					RETAIN A RECORD OF WELDING PROCEDURE SPECIFICATIONS
VERIFYING WELDER QUALIFICATIONS	1705.2.2.1			X			RETAIN A RECORD OF QUALIFICATION CARDS
COMPLETE AND PARTIAL JOINT PENETRATION GROOVE WELDS	TABLE 1705.2	AWS D1.1 SECTION 6	X				
MULTIPASS FILLET WELDS			X				
SINGLE PASS FILLET WELDS GREATER THAN 5/16"			X				ALL WELDS VISUALLY INSPECTED PER AWS D1.16.9
PLUG AND SLOT WELDS			X				
SINGLE PASS FILLET WELDS LESS THAN OR EQUAL TO 5/16"				X			
WELDING STAIR AND RAILING SYSTEMS	1705.2(2.5)	AWS D1.1 SECTION 6		X			ALL WELDS VISUALLY INSPECTED PER AWS D1.1 6.9
VERIFICATION OF FRAME JOINT DETAILS INCLUDING MEMBER AND COMPONENT LOCATIONS, BRACING, AND STIFFENERS	TABLE 1705.2	AISC 360 N5.7		X			
REINFORCING STEEL WELDING							SEE CONCRETET SECTION
STEEL ELEMENTS OF COMPOSITE CONSTRUCTION							
INSTALLATION OF COMPOSITE SLAB DECKING	1705.1.1	ICC EVALUATION REPORT ASCE 9 CHAPTER 3		X			SPECIAL INSPECTIONS APPLY TO DECKING TYPE, DEPTH, GAUGE, AND FASTENING
INSTALLATION OF ROOF DECKING	1705.1.1	ICC EVALUATION REPORT		X			SPECIAL INSPECTIONS APPLY TO DECKING TYPE, DEPTH AND GAUGE, POWER ACTUATED FASTENERS, SCREWS, PROPRIETARY SIDE SEAM ATTACHMENTS, AND BUTTON PUNCHES AND SHEAR CONNECTORS
FLOOR AND ROOF DECK WELDS	TABLE 1705.2	AWS D1.3 SECTION 7		X			ALL WELDS INSPECTED PER AWS D1.3 7.1
WELDING STUDS IN STRUCTURAL DIAPHRAGMS	1705.2 (2.3 and 3)	AISC 360 N6 AWS D1.1 SECTION 7		X			CONTINUOUS INSPECTION IS NOT REQUIRED WHEN WELDS INSTALLED WITH AN AUTOMATICALLY TIMED STUD WELDING MACHINE PER SECTION 7 OF AWS D1.1(ONLY PERIODIC), 1705.2(3) ALL WELDS VISUALLY INSPECTED PER AWS D1.1 7.8.1
PLACEMENT AND INSTALLATION OF STEEL DECK	1705.2	AISC 360 TABLE N6.1				X	
PLACEMENT AND INSTALLATION OF STEEL HEADED STUD ANCHOS						X	
DOCUMENT ACCEPTANCE OR REJECTION OF STEEL ELEMENTS						X	

TABLE 2A - REQUIRED STRUCTURAL STEEL SPECIAL INSPECTIONS CONT.

SYSTEM OR MATERIAL	INSPECTION: OSSC CODE REFERENCE	INSPECTION: CODE OR STANDARD REFERENCE	INSPECTION (NOTES 5 AND 6): CONTINUOUS	PERIODIC	OBSERVE	PERFORM	REMARKS
STEEL CONT.							
HIGH-STRENGTH BOLTING							
SNUG-TIGHT HIGH STRENGTH BOLT INSTALLATION	1705.2.1	RCSC SPECIFICATION FOR STRUCTURAL JOINTS USING ASTM A325 OR A490 BOLTS SECTION 9 AISC 360 SECTION M2.5		X			ALL CONNECTIONS VISUALLY INSPECTED AND VERIFIED SNUG
PRETENSIONED HIGH STRENGTH BOLT INSTALLATION USING TURN-OF-THE-NUT METHOD WITH MATCH MARKING, DIRECT TENSION INDICATOR METHOD, OR TWIST-OFF TYPE TENSION CONTROL BOLT METHOD	1705.2.1			X			ALL CONNECTIONS VISUALLY INSPECTED. CONNECTIONS USING DIRECT TENSION INDICATORS, ALL BOLTS SHALL BE INSPECTED AFTER SNUGGING AND AFTER PRETENSIONING
PRETENSIONED HIGH STRENGTH BOLT INSTALLATION USING TURN-OF-THE-NUT METHOD WITHOUT MATCH MARKING OR CALIBRATED WRENCH METHOD	1705.2.1		X				ALL CONNECTIONS VISUALLY INSPECTED
INSPECTION TASKS PRIOR TO BOLTING	1705.2	AISC 360 TABLE N5.6-1					
MANUFACTURER"S CERTIFICATIONS AVAILABLE FOR FASTENER MATERIALS						X	
FASTENERS MARKED IN ACCORDANCE WITH ASTM REQUIREMENTS					X		
PROPER FASTENERS SELECTED FOR THE JOINT DETAIL (GRADE, TYPE, BOLT LENGTH, IF THREADS ARE TO BE EXCLUDED FROM THE SHEAR PLANE)					X		
PROPER BOLTING PROCEDURE SELECTED FOR JOINT DETAIL					X		
CONNECTING ELEMENTS< INCLUDING THE APPROPRIATE FAYING SURFACE CONDITION AND HOLE PREPARATION, IF SPECIFIED, MEET APPLICABLE REQUIREMENTS					X		
PRE-INSTALLATION VERIFICATION TESTING BY INSTALLATION PERSONNEL OBSERVED AND DOCUMENTED FOR FASTENER ASSEMBLIES AND METHODS USED					X		
PROPER STORAGE PROVIDED FOR BOLTS, NUTS, WASHERS AND OTHER FASTENER COMPONENTS					X		
INSPECTION TASKS DURING BOLTING	1705.2	AISC 360 TABLE N5.6-2 RCSC SPECIFICATION FOR STRUCTURAL JOINTS USING ASTM A325 OR A490 BOLTS SECTION 9					
FASTENER ASSEMBLIES, OF SUITABLE CONDITION, PLACED IN ALL HOLES AND WASHERS (IF REQUIRED) ARE POSITIONED AS REQUIRED					X		
JOINT BROUGHT TO THE SNUG-TIGHT CONDITION PRIOR TO THE PRETENSIONING OPERATION					X		
FASTENER COMPONENT NOT TURNED BY THE WRENCH PREVENTED FROM ROTATING					X		
FASTENERS ARE PRETENSIONED IN ACCORDANCE WITH THE RCSC SPECIFICATION, PROGRESSING SYSTEMATICALLY FROM THE MOST RIGID POINT TOWARD THE FREE EDGES					X		
INSPECTION TASKS AFTER BOLTING							
DOCUMENT ACCEPTANCE OR REJECTION OF BOLTED CONNECTIONS	1705.2	AISC 360 TABLE N5.6-3				X	

TABLE 3 - REQUIRED INSPECTIONS FOR SPECIAL CASES

SYSTEM OR MATERIAL	INSPECTION: OSSC CODE REFERENCE	INSPECTION: CODE OR STANDARD REFERENCE	FREQUENCY (NOTE 6): CONTINUOUS	FREQUENCY (NOTE 6): PERIODIC	REMARKS
PRE-ENGINEERED STRUCTURES					
FABRICATION AND ERECTION	1705.1.1	MBMA	X	X	REFER TO TABLE 2 FOR FABRICATOR, WELDING, AND HIGH STRENGTH BOLTING. SPECIAL INSPECTION REQUIREMENTS AND TABLES 6 AND 7 FOR MATERIAL SPECIFIC TESTING REQUIREMENTS. REFER TO DEFERRED SUBMITTAL FOR ADDITIONAL INFORMATION

TABLE 4 - REQUIRED SPECIAL INSPECTIONS FOR SEISMIC RESISTANCE

SYSTEM OR MATERIAL	INSPECTION: OSSC CODE REFERENCE	INSPECTION: CODE OR STANDARD REFERENCE	FREQUENCY (NOTE 6): CONTINUOUS	FREQUENCY (NOTE 6): PERIODIC	REMARKS
GENERAL					
DESIGNATED SEISMIC LOAD-RESISTING SYSTEMS (SLRS)	1704.3.2 1705.11				REFERENCE GENERAL STRUCTURAL NOTES FOR OUTLINE OF (SLRS) SYSTEM. REFERENCE TABLE 4 FOR MATERIAL SPECIFIC INSPECTIONS REQUIREMENTS
DESIGNATED SEISMIC SYSTEMS (SECONDARY)					REFERENCE TABLE N1 AND N2 FOR INSPECTION REQUIREMENTS
STEEL					
REFERENCE TABLE 4A FOR REQUIRED SPECIAL INSPECTIONS FOR SEISMIC RESISTANCE OF STRUCTURAL STEEL					

BR|IC ARCHITECTURE, INC.
1233 NW NORTHRUP STREET, SUITE 100
PORTLAND, OR 97209 T 503 595 4900

New Middle School / High School
Seaside School District
1801 S. FRANKLIN STREET, SEASIDE, OREGON 97138
t: 503-738-5591

kpff
111 SW Fifth Ave., Suite 2500
Portland, OR 97204
O: 503.227.3251
F: 503.227.7980
www.kpff.com
10021700078R17

STRUCTURAL REGISTERED PROFESSIONAL ENGINEER 15,773 OREGON JAN. 21, 1992 JERALD L. ABDIE
EXPIRES 12-31-19

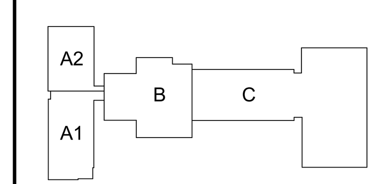

phase BP2-PERMIT SET
date 6/15/2018
revisions
project # 17007

SPECIAL INSPECTION AND TESTING CONT.

S0.05

6/14/2018 12:08:50 PM
C:\1REVIT\10021700078_Courtney.Bradshaw@kpff.com.rvt

SPECIAL INSPECTION AND TESTING CONT.

TABLE 4A - REQUIRED SPECIAL INSPECTIONS AND QUALITY CONTROL FOR SEISMIC RESISTANCE OF STRUCTURAL STEEL

SYSTEM OR MATERIAL	INSPECTION OSSC CODE REFERENCE	CODE OR STANDARD REFERENCE	QA/QC TASKS (NOTES 5,6,10) OBSERVE	PERFORM	REMARKS
VISUAL INSPECTION TASKS PRIOR TO WELDING					
MATERIAL IDENTIFICATION (TYPE/GRADE)	1705.11.1	AISC 341 TABLE J6-1 AWS D1.8/D1.8M	X		
WELDER IDENTIFICATION SYSTEM			X		
FIT-UP OF GROOVE WELDS (INCLUDING JOINT GEOMETRY)					
JOINT PREPARATION			X (QA)	X (QC)	NOTE 7
DIMENSIONS (ALIGNMENT, ROOT OPENING, ROOT FACE, BEVEL)			X (QA)	X (QC)	
CLEANLINESS (CONDITION OF STEEL SURFACES)			X (QA)	X (QC)	
TACKING (TACK WELD QUALITY AND LOCATION)			X (QA)	X (QC)	
BACKING TYPE AND FIT (IF APPLICABLE)			X (QA)	X (QC)	
CONFIGURATION AND FINISH OF ACCESS HOLES			X		
FIT-UP OF FILLET WELDS					
DIMENSIONS (ALIGNMENT, GAPS AT ROOT)			X (QA)	X (QC)	NOTE 7
CLEANINESS(CONDITION OF STEEL SURFACES)			X (QA)	X (QC)	
TACKING (TACK WELD QUALITY AND LOCATION)			X (QA)	X (QC)	
VISUAL INSPECTION TASKS DURING WELDING					
WPS FOLLOWED	1705.11.1	AISC 341 TABLE J6-2 AWS D1.8/D1.8M			
SETTINGS ON WELDING EQUIPMENT			X		
TRAVEL SPEED			X		
SELECTED WELDING MATERIALS			X		
SHIELDING GAS TYPE/FLOW RATE			X		
PREHEAT APPLIED			X		
INTERPASS TEMPERATURE MAINTAINED (MIN/MAX.)			X		
PROPER POSITION (F, V, H, OH)			X		
INTERMIX OF FILLER METALS AVOIDED UNLESS APPROVED			X		
USE OF QUALIFIED WELDERS			X		
CONTROL AND HANDLING OF WELDING CONSUMABLES					
PACKAGING			X		
EXPOSURE CONTROL			X		
ENVIRONMENTAL CONDITIONS					
WIND SPEED WITHIN LIMITS			X		
PRECIPITATION AND TEMPERATURE			X		
WELDING TECHNIQUES					
INTERPASS AND FINAL CLEANING			X		
EACH PASS WITHIN PROFILE LIMITATIONS			X		
EACH PASS MEETS QUALITY REQUIREMENTS			X		
NO WELDING OVER CRACKED TACKS			X		
WELDS CLEANED			X		
VISUAL INSPECTION TASKS AFTER WELDING					
SIZE, LENGTH, AND LOCATION OF WELDS	1705.11.1	AISC 341 TABLE J6-3 AWS D1.8/D1.8M		X(D)	
WELDS MEET VISUAL ACCEPTANCE CRITERIA					THE INSPECTOR SHALL PREPARE REPORTS INDICATING THAT THE WORK HAS BEEN PERFORMED IN ACCORDANCE WITH THE CONTRACT DOCUMENTS.
CRACK PROHIBITION				X(D)	
WELD/BASE-METAL FUSION				X(D)	
CRATER CROSS SECTION				X(D)	
WELD PROFILE AND SIZE				X(D)	
UNDERCUT				X(D)	
POROSITY				X(D)	
PLACEMENT OF REINFORCING OR CONTOURING FILLET WELDS (IF REQUIRED)				X(D)	
BACKING REMOVED, WELD TABS REMOVED AND FINISHED, AND FILLET WELDS ADDED (IF REQUIRED)				X(D)	
REPAIR ACTIVITIES				X(D)	
INSPECTION TASKS PRIOR TO BOLTING					
PROPER FASTENERS SELECTED FOR THE JOINT DETAIL	1705.11.1	AISC 341 TABLE J7-1 RCSC SPECIFICATION FOR STRUCTURAL JOINTS USING HIGH-STRENGTH BOLTS	X		
PROPER BOLTING PROCEDURE SELECTED FOR JOINT DETAIL			X		
CONNECTING ELEMENTS, INCLUDING THE APPROPRIATE FAYING SURFACE CONDITION AND HOLE PREPARATION, IF SPECIFIED, MEET APPLICABLE REQUIREMENTS			X		
PRE-INSTALLATION VERIFICATION TESTING BY INSTALLATION PERSONNEL OBSERVED FOR FASTENER ASSEMBLIES AND METHODS USED			X (QA)	X (QC)(D)	THE INSPECTOR SHALL PREPARE REPORTS INDICATING THAT THE WORK HAS BEEN PERFORMED IN ACCORDANCE WITH THE CONTRACT DOCUMENTS.
PROPER STORAGE PROVIDED FOR BOLTS, NUTS, WASHERS AND OTHER FASTENER COMPONENTS			X		
INSPECTION TASKS DURING BOLTING					
FASTENER ASSEMBLIES PLACED IN ALL HOLES AND WASHERS (IF REQUIRED) ARE POSITIONED AS REQUIRED	1705.11.1	AISC 341 TABLE J7-2 RCSC SPECIFICATION FOR STRUCTURAL JOINTS USING HIGH-STRENGTH BOLTS	X		
JOINT BROUGHT TO THE SNUG TIGHT CONDITION PRIOR TO THE PRETENSIONING OPERATION			X		
FASTENER COMPONENT NOT TURNED BY THE WRENCH PREVENTED FROM ROTATING			X		
BOLTS ARE PRETENSIONED PROGRESSING SYSTEMATICALLY FROM THE MOST RIGID POINT TOWARD THE FREE EDGES			X		
INSPECTION TASKS AFTER BOLTING					
DOCUMENT ACCEPTED AND REJECTED CONNECTION	1705.11.1	AISC 341 TABLE J7-3		X(D)	THE INSPECTOR SHALL PREPARE REPORTS INDICATING THAT THE WORK HAS BEEN PERFORMED IN ACCORDANCE WITH THE CONTRACT DOCUMENTS.
OTHER INSPECTION TASKS					
RBS REQUIREMENTS, IF APPLICABLE	1705.11.1	AISC 341 TABLE J8-1 AISC 358 5.7			THE INSPECTOR SHALL PREPARE REPORTS INDICATING THAT THE WORK HAS BEEN PERFORMED IN ACCORDANCE WITH THE CONTRACT DOCUMENTS.
CONTOUR AND FINISH				X(D)	
DIMENSIONAL TOLERANCES				X(D)	
PROTECTED ZONE - NO HOLES AND UNAPPROVED ATTACHMENTS MADE BY FABRICATOR OR ERECTOR, AS APPLICABLE		AISC 341 TABLE J8-1 AISC 341 D1.3 AISC 341 I2.1		X(D)	THE INSPECTOR SHALL PREPARE REPORTS INDICATING THAT THE WORK HAS BEEN PERFORMED IN ACCORDANCE WITH THE CONTRACT DOCUMENTS.
INSPECTION OF COMPOSITE STRUCTURES PRIOR TO CONCRETE PLACEMENT					
MATERIAL IDENTIFICATION OF REINFORCING STEEL (TYPE/GRADE)	1705.11.1	AISC 341 TABLE J9-1	X		REFER TO TABLE 2 STRUCTURAL SPECIAL INSPECTION
DETERMINATION OF CARBON EQUIVALENT FOR REINFORCING STEEL OTHER THAN ASTM A706			X		
PROPER REINFORCING STEEL SIZE, SPACING AND ORIENTATION			X		
REINFORCING STEEL HAS NOT BEEN REBENT IN THE FIELD			X		
REINFORCING STEEL HAS BEEN TIED AND SUPPORTED AS REQUIRED			X		
REQUIRED REINFORCING STEEL CLEARANCES HAVE BEEN PROVIDED			X		
COMPOSITE MEMBER HAS REQUIRED SIZE			X		
INSPECTION OF COMPOSITE STRUCTURES DURING CONCRETE PLACEMENT					
CONCRETE: MATERIAL IDENTIFICATION (MIX DESIGN, COMPRESSIVE STRENGTH, MAXIMUM LARGE AGGREGATE SIZE, MAXIMUM SLUMP)	1705.11.1	AISC 341 TABLE J9-2 ASTM C39, ASTM C143	X		THE INSPECTOR SHALL PREPARE REPORTS INDICATING THAT THE WORK HAS BEEN PERFORMED IN ACCORDANCE WITH THE CONTRACT DOCUMENTS.
LIMITS ON WATER ADDED AT THE TRUCK OR PUMP			X		THE INSPECTOR SHALL PREPARE REPORTS INDICATING THAT THE WORK HAS BEEN PERFORMED IN ACCORDANCE WITH THE CONTRACT DOCUMENTS.
PROPER PLACEMENT TECHNIQUES TO LIMIT SEGREGATION			X		
INSPECTION OF COMPOSITE STRUCTURES AFTER CONCRETE PLACEMENT					
ACHIEVEMENT OF MINIMUM SPECIFIED CONCRETE COMPRESSIVE STRENGTH AT SPECIFIED AGE	1705.11.1	AISC 341 TABLE J9-3 ASTM C39		D	THE INSPECTOR SHALL PREPARE REPORTS INDICATING THAT THE WORK HAS BEEN PERFORMED IN ACCORDANCE WITH THE CONTRACT DOCUMENTS.

TESTING

TABLE 6 - REQUIRED TESTING FOR SPECIAL INSPECTIONS

SYSTEM OR MATERIAL	INSPECTION OSSC CODE REFERENCE	CODE OR STANDARD REFERENCE	FREQUENCY (NOTE 6) CONTINUOUS	PERIODIC	REMARKS
GEOTECHNICAL					
FILL IN-PLACE DENSITY OR PREPARED SUBGRADE DENSITY	1705.6	VARIES; GEOTECHNICAL REPORT OR MINIMUM PER IBC APPENDIX J107.5, WHICHEVER IS GREATER		X	BY THE GEOTECHNICAL ENGINEER
MATERIAL VERIFICATION		VARIES; CLASSIFICATION AND TESTING OF CONTROLLED FILL MATERIALS		X	BY THE GEOTECHNICAL ENGINEER
CONCRETE					
CONCRETE STRENGTH	1705.3 ASTM C172 ASTM C 31 ACI318:5.6,5.8	ASTM C39	EACH 150 CY NOR LESS THAN EACH 5000 SF OF SLAB OR WALL PLACED EACH SHIFT		FABRICATE SPECIMENS AT TIME FRESH CONCRETET IS PLACED
CONCRETE SLUMP		ASTM C143			
CONCRETE AIR CONTENT		ASTM C231			
CONCRETE TEMPERATURE		ASTM C1064			
MASONRY (SEE TESTING NOTE 2)					
MASONRY LEVEL B QUALITY ASSURANCE - Minimum Tests					
Verification of slump flow and Visual Stability Index (VSI) as delivered to the project site in accordance with Specification Article 1.5 B.1.b.3 for self-consolidating grout					
Verification of f'm and f'AAC in accordance with Specification Article 1.4 B prior to construction, except where specifically exempted by this Code					
MASONRY LEVEL C QUALITY ASSURANCE- Minimum Tests					
STEEL					
ULTRASONIC (UT) TESTING OF WELDS	1705.2.2	AWS D1.1 6.13 & 6.14.3			ALL C.J.P. WELDS 5/16" AND THICKER REQUIRE UT TESTING.
MAGNETIC PARTICLE (MT) TESTING OF WELDS	1705.2.2	AWS D1.1 6.14.4 AISC360 N5.5c			REQUIRED AT THERMALLY CUT ACCESS HOLES WHERE FLANGE THICKNESS EXCEEDS 2" FOR ROLLED SHAPES OR WHEN THE WEB THICKNESS EXCEEDS 2" FOR BUILT-UP SHAPES. REQUIRED WHERE SPECIFICALLY NOTED ON DRAWINGS OR AS DIRECTED BY KPFF AT WELDS IDENTIFIED TO BE IN QUESTION BASED ON INSPECTIONS
PRE-CONSTRUCTION TESTING OF WELDING STUDS	1705.2.2	AWS D1.1 7.7.1	EACH SIZE AND TYPE OF STUD EACH SHIFT		THIS TESTING PERFORMED BY CONTRACTOR AND CONFIRMED BY SPECIAL INSPECTOR
STUD APPLICATION QUALIFICATION	1705.2.2	AWS D1.1 7.6	NON-PREQUALIFIED APPLICATIONS		THIS TESTING PERFORMED BY CONTRACTOR AND CONFIRMED BY SPECIAL INSPECTOR
PRE-INSTALLATION VERIFICATION OF PRETENSIONED HIGH STRENGTH BOLTS	1705.2.2	RCSC SPECIFICATION FOR STRUCTURAL JOINTS USING ASTM A325 OR A490 BOLTS SECTION 7	EACH COMBINATION OF DIAMETER, LENGTH, GRADE, AND LOT TO BE USED IN THE WORK		

TABLE 7 - REQUIRED TESTING FOR SEISMIC RESISTANCE SPECIAL INSPECTIONS

SYSTEM OR MATERIAL	INSPECTION OSSC CODE REFERENCE	CODE OR STANDARD REFERENCE	FREQUENCY	REMARKS
CONCRETE REINFORCEMENT				
TEST A615 REINFORCEMENT IN SPECIAL MOMENT FRAMES, SPECIAL STRUCTURAL WALLS, AND END COUPLING BEAMS CONNECTING STRUCTURAL WALLS	1705.12.1	ACI 318: 21.1.5.2		NOT REQUIRED WHEN CERTIFIED MILL TEST REPORTS ARE PROVIDED. REFERENCE DRAWINGS FOR LOCATIONS
TEST A615 REINFORCEMENT FOR WELDABILITY WHEN SUCH REINFORCEMENT IS TO BE WELDED	1705.12.1	ACI 318: 3.5.2		
STEEL				
REFERENCE TABLE 7A FOR REQUIRED TESTING FOR SEISMIC RESISTANCE SPECIAL INSPECTIONS OF STRUCTURAL STEEL				

TABLE 7A - REQUIRED TESTING FOR SEISMIC RESISTANCE SPECIAL INSPECTIONS OF STRUCTURAL STEEL

SYSTEM OR MATERIAL	INSPECTION OSSC CODE REFERENCE	CODE OR STANDARD REFERENCE	DESCRIPTION/FREQUENCY	REMARKS
2a) k-AREA NDT AT WELDING OF DOUBLER PLATES, COINTINUTITY PLATES OR STIFFENERS	1705.12.2	AISC 341 SECTION J6	WEB SHALL BE TESTED FOR CRACKS USING MT INCLUDING BASE METTAL WITHIN 3 IN OF WELD.	MT SHALL BE PERFORMED NO SOONER THAN 48 HOURS AFTER COMPLETION OF WELDING
2b) CJP GROOVE WELD NDT			UT SHALL BE PERFORMED ON 5/16" THICKNESS AND GREATER. MT SHALL BE PEROFMED ON 25% OF ALL BEAM-TO-COLUMN CJP GROOVE WELDS.	WELD DISCONTINUITIES SHALL BE ACCEPTED OR REJECTED ON THE BASIS OF CRITERIA OF AWS D1.1/D1.1M TABLE 6.2. UT TESTING NOT REQUIRED ON THICKNESS LESS THAN 5/16"
2c) BASE METAL NDT FOR LAMELLAR TEARING AND LAMINATIONS			FOR BASE METAL THICKNESS (t) OF 1 1/2" AND GREATER AND CONNECTED MATERIAL THICKNESS OF 3/4" AND GREATER, UT FOR DISCONTINUITIES BEHIND AND ADJACENT TO THE FUSION LINE.	ANY BASE METAL DISCONTINUITIES FOUND WITHIN t/4 OF THE STEEL SURFACE SHALL BE ACCEPTED OR REJECTED ON THE BASIS OF THE CRITERIA OF AWS D1.1/D1.1M TABLE 6.2
2d) BEAM COPE AND ACCESS HOLE NDT			MT OR PENETRANT TESTING OF WELD SPLICES AND CONNECTIONS, THERMALLY CUT SURFACES OF BEAM COPES AND ACCESS HOLES WHERE FLANGE THICKNESS EXCEEDS 1 1/2" FOR ROLLED SHAPES OR WHEN THE WEB THICKNESS EXCEEDS 1 1/2" FOR BUILT-UP SHAPES	
2e) REDUCED BEAM SECTION REPAIR NDT			MT SHALL BE PERFORMED ON ANY WELD AND ADJACENT AREA OF THE RBS CUT SRUFACE THAT HAS BEEN REPAIRED BY WELDING OR ON THE BASE METAL OF THE RBS CUT SURFACE IF A SHARP NOTCH HAS BEEN REMOVED BY GRINDING	
2f) WELD TAB REMOVAL SITES			AT THE END OF WELDS WHERE WELD TABS HAVE BEEN REMOVED, MT SHALL BE PERFORMED ON THE SAME BEAM-TO-COLUMN JOINTS RECEIVING UT AS REQUIRED UNDER ITEM 2b	MT OF CONTINUTITY PLATE WELD TABS REMOVAL SITES IS NOT REQUIRED.

6/14/2018 12:08:53 PM
C:\1REVIT\10021700078_Courtney.Bradshaw@kpff.com.rvt

BR|IC
ARCHITECTURE, INC.
1233 NW NORTHRUP STREET, SUITE 100
PORTLAND, OR 97209 T 503 595 4900

New Middle School / High School
Seaside School District
1801 S. FRANKLIN STREET, SEASIDE, OREGON 97138
t: 503-738-5591

kpff
111 SW Fifth Ave., Suite 2500
Portland, OR 97204
O: 503.227.3251
F: 503.227.7980
www.kpff.com
10021700078R17

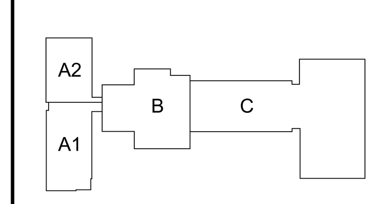

phase BP2-PERMIT SET

date 6/15/2018

revisions

project # 17007

SPECIAL INSPECTION AND TESTING CONT.

S0.06

FLOOR LOADING SCHEDULE			
LOADING TYPE	SUPERIMPOSED DEAD LOAD	LIVE LOAD	PARTITION
A	5	100 PSF	NONE
B	18	80 PSF	NONE
C	18	60 PSF	15 PSF
D	18	40 PSF	15 PSF
E	18	60 PSF	15 PSF
F	18	50 PSF	15 PSF
G	5	125 PSF	NONE
H	23	100 PSF	NONE
I	18	125 PSF	NONE
J	68	100 PSF	NONE
K	68	40 PSF	15 PSF

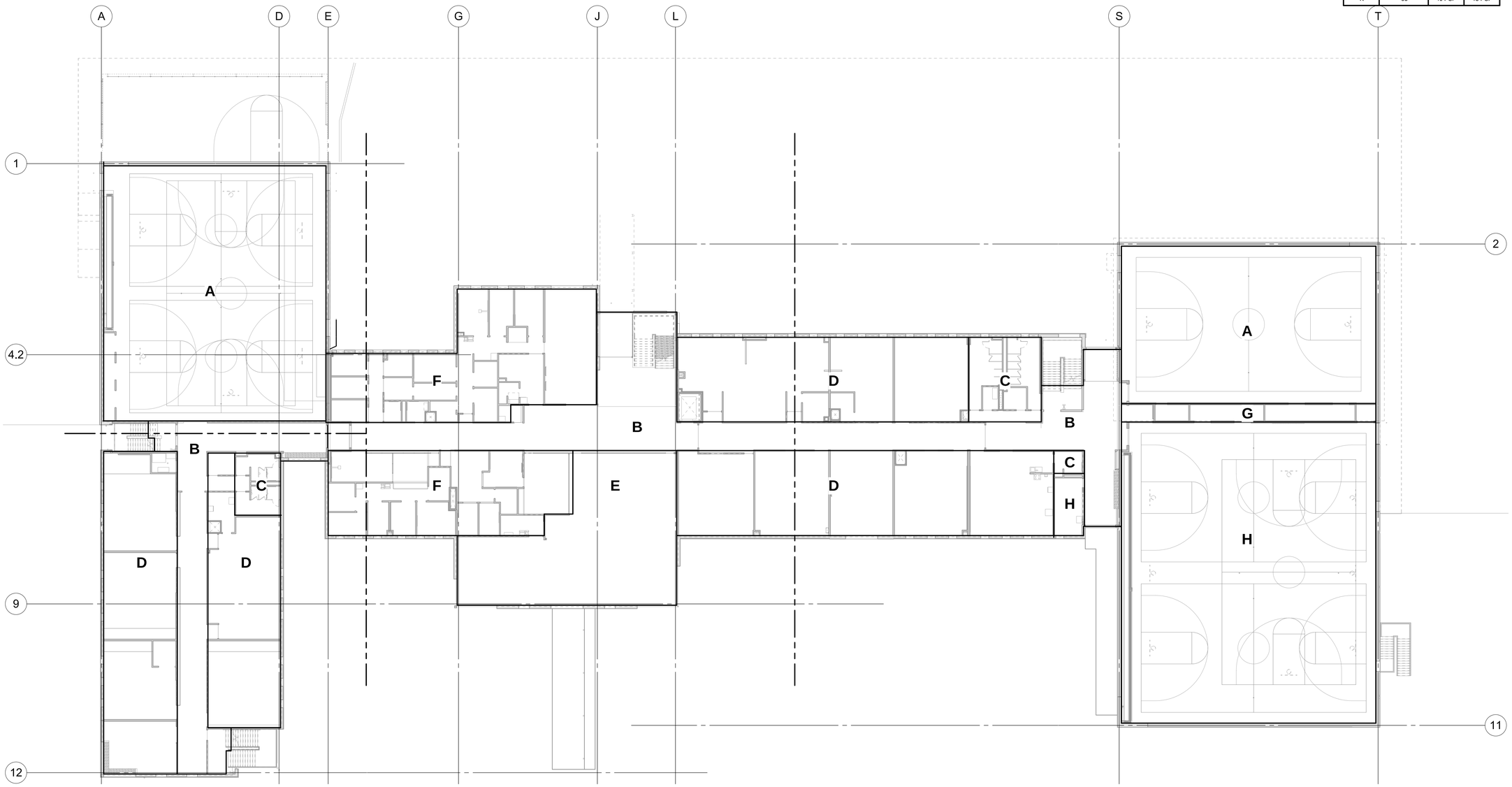

1 FLOOR LIVE LOAD PLAN - LEVEL 2
1/16" = 1'-0"

BR|IC ARCHITECTURE, INC.
1233 NW NORTHRUP STREET, SUITE 100
PORTLAND, OR 97209 T 503 595 4900

New Middle School / High School
Seaside School District
1801 S. FRANKLIN STREET, SEASIDE, OREGON 97138
t: 503-738-5591

kpff
111 SW Fifth Ave., Suite 2500
Portland, OR 97204
O: 503.227.3251
F: 503.227.7980
www.kpff.com
10021700078R17

STRUCTURAL REGISTERED PROFESSIONAL ENGINEER 15,773 OREGON JAN. 21, 1992 JERALD L. ABDIE
EXPIRES 12-31-19

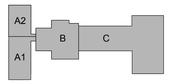

phase	BP2-PERMIT SET
date	6/15/2018
revisions	
project #	17007

FLOOR LIVE LOAD PLAN - LEVEL 2

S0.22

6/14/2018 12:09:00 PM
C:\REVIT\10021700078_Courtney.Bradshaw@kpff.com.rvt

FLOOR LOADING SCHEDULE			
LOADING TYPE	SUPERIMPOSED DEAD LOAD	LIVE LOAD	PARTITION
A	5	100 PSF	NONE
B	18	80 PSF	NONE
C	18	60 PSF	15 PSF
D	18	40 PSF	15 PSF
E	18	60 PSF	15 PSF
F	18	50 PSF	15 PSF
G	5	125 PSF	NONE
H	23	100 PSF	NONE
I	18	125 PSF	NONE
J	68	100 PSF	NONE
K	68	40 PSF	15 PSF

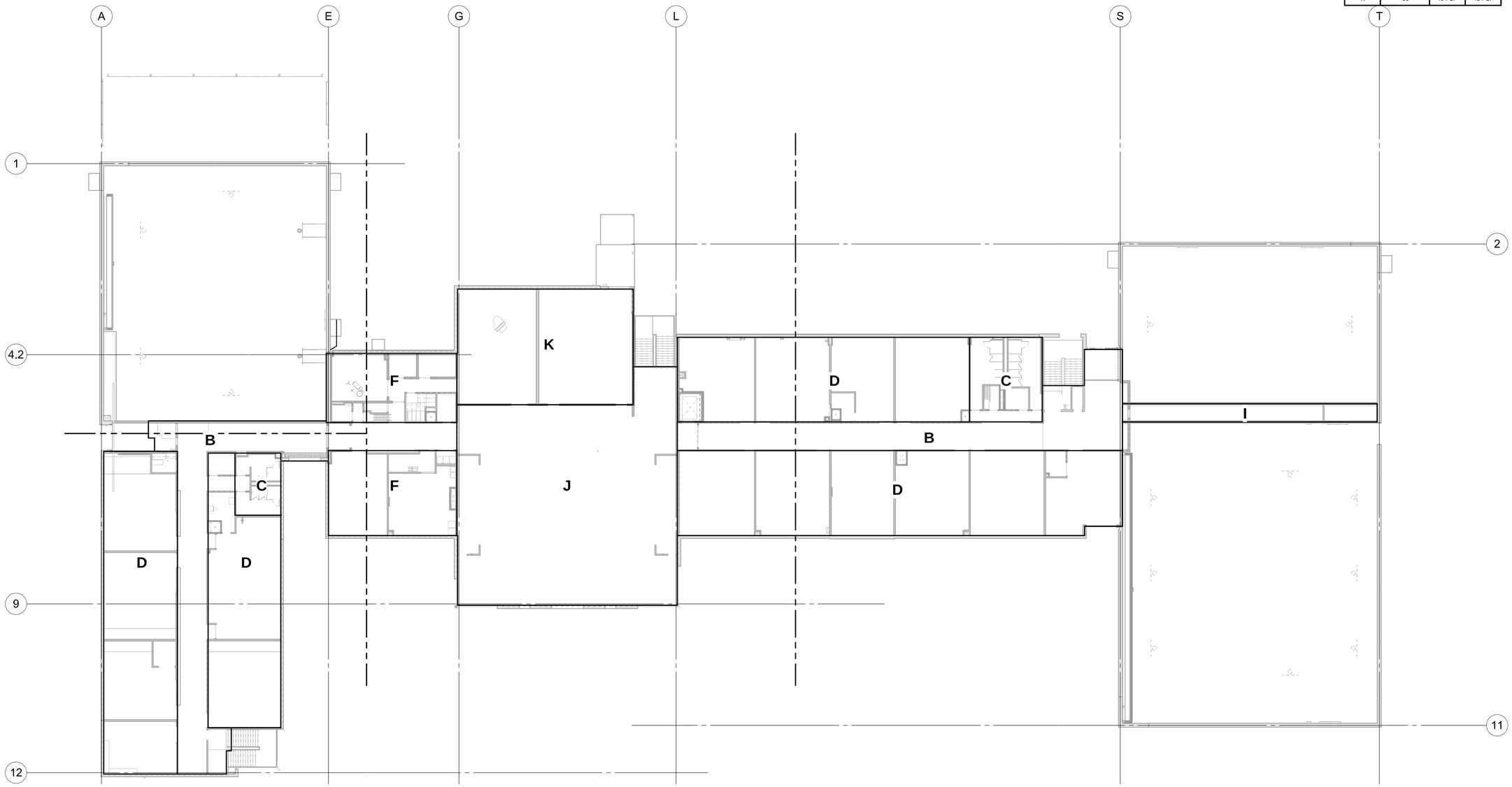

1 FLOOR LIVE LOAD PLAN - LEVEL 3
1/16" = 1'-0"

BR|IC ARCHITECTURE, INC.
1233 NW NORTHRUP STREET, SUITE 100
PORTLAND, OR 97209 T 503 595 4900

New Middle School / High School
Seaside School District
1801 S. FRANKLIN STREET, SEASIDE, OREGON 97138
t: 503-738-5591

kpff
111 SW Fifth Ave., Suite 2500
Portland, OR 97204
O: 503.227.3251
F: 503.227.7980
www.kpff.com
10021700078R17

STRUCTURAL REGISTERED PROFESSIONAL ENGINEER 15,773 OREGON JAN. 21, 1992 GERALD L. ABDIE
EXPIRES 12-31-19

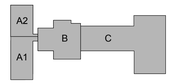

phase	BP2-PERMIT SET
date	6/15/2018
revisions	
project #	17007

FLOOR LIVE LOAD PLAN - LEVEL 3

S0.23

6/14/2018 12:09:03 PM
C:\1REVIT\10021700078_Courtney.Bradshaw@kpff.com.rvt

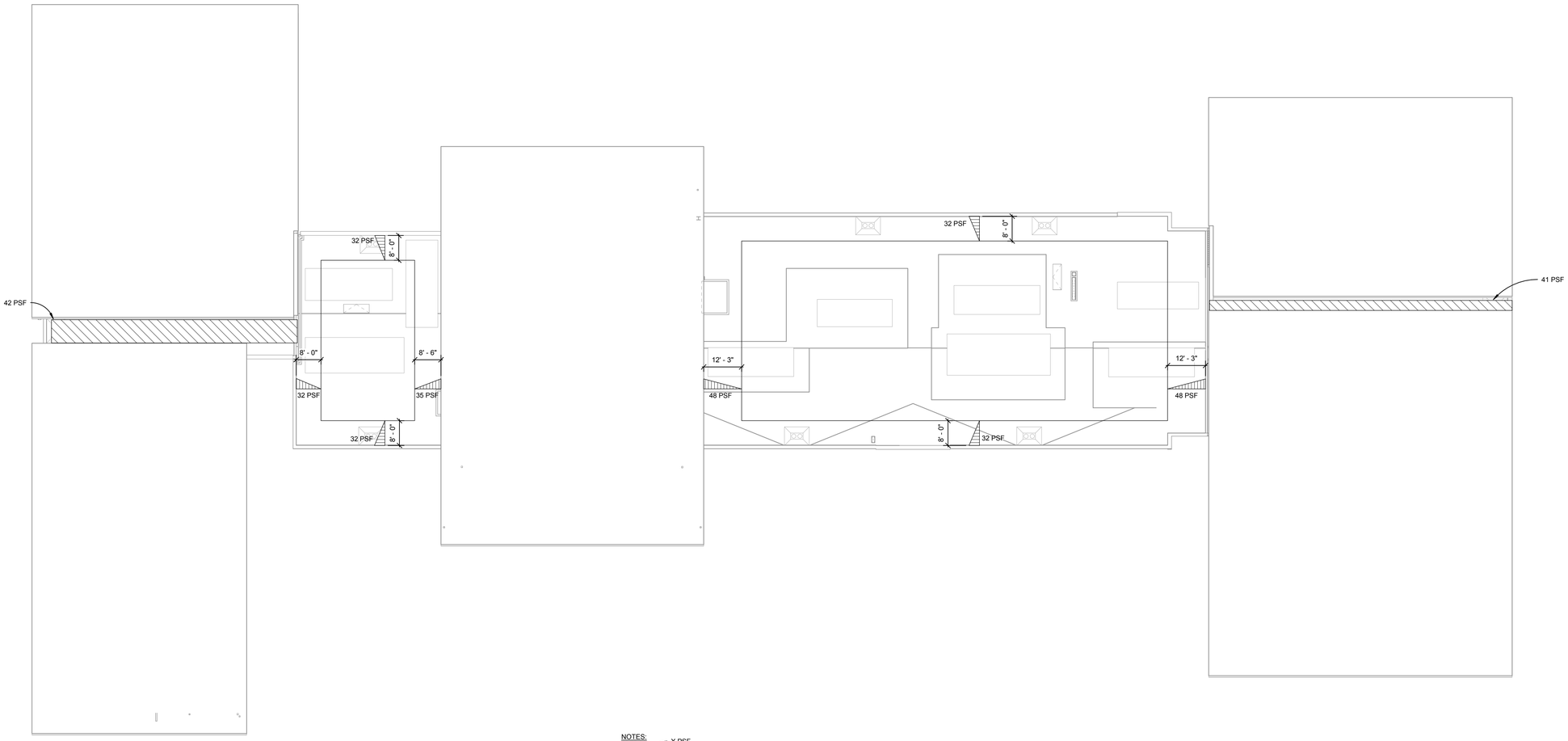

NOTES:

1. X PSF / L — INDICATES EXTENT AND VALUE OF SNOW DRIFT LOAD TO BE APPLIED CONCURRENTLY WITH A BALANCED SNOW LOAD OF 4 PSF APPLIED ON ENTIRE ROOF. THIS IS SNOW LOAD CASE A.

2. SNOW DRIFT IS ONLY ONE LOAD CASE. OTHER SNOW LOAD CASES SHOULD BE CONSIDERED AND MAY CONTROL SUCH AS BALANCED SNOW LOAD OVER ENTIRE ROOF AREA AS INDICATED IN DESIGN CRITERIA ON S0.02.

3. WHERE ONE SNOW DRIFT INTERSECTS ANOTHER AT AN ANGLE, MAXIMUM UNIT PRESSURE SHALL BE TAKEN AS THE GREATER OF THE TWO PRESSURES.

1 SNOW DRIFT LOAD PLAN - ROOF
1/16" = 1'-0"

6/14/2018 12:09:05 PM
C:\1REVIT\10021700078_Courtney.Bradshaw@kpff.com.rvt

BR|IC ARCHITECTURE, INC.
1233 NW NORTHRUP STREET, SUITE 100
PORTLAND, OR 97209 T 503 595 4900

New Middle School / High School
Seaside School District
1801 S. FRANKLIN STREET, SEASIDE, OREGON 97138
t: 503-738-5591

kpff
111 SW Fifth Ave., Suite 2500
Portland, OR 97204
O: 503.227.3251
F: 503.227.7980
www.kpff.com
10021700078R17

STRUCTURAL REGISTERED PROFESSIONAL ENGINEER 15,773 OREGON JAN. 21, 1992 GERALD L. ABDIE
EXPIRES 12-31-19

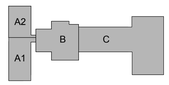

phase	BP2-PERMIT SET
date	6/15/2018
revisions	
project #	17007

SNOW DRIFT LOAD PLAN - ROOF

S0.31

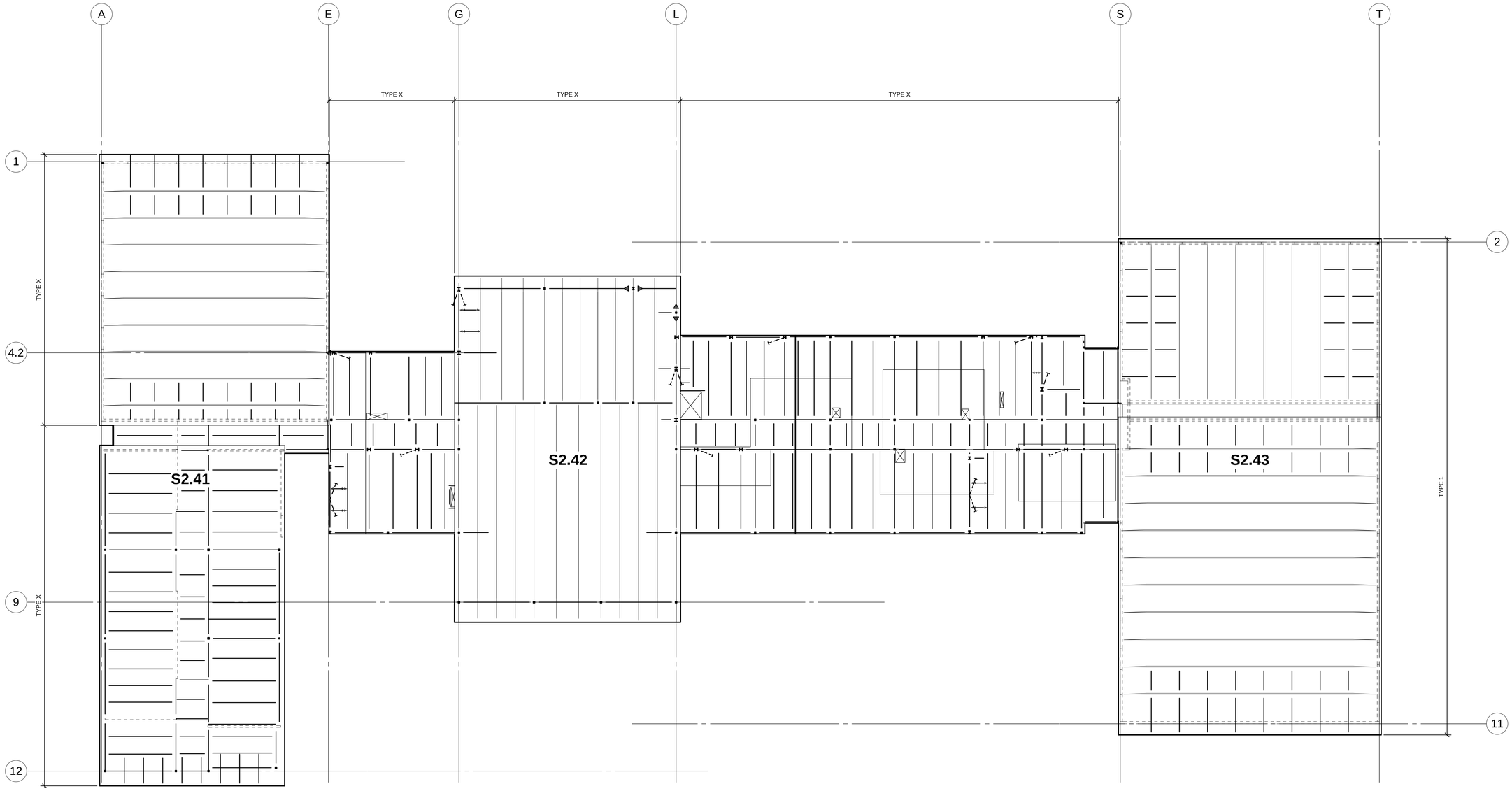

NOTES:

1. ALL LONGITUDINAL SUPPORTS PROVIDE FASTENERS @ 6" o.c. U.N.O.
2. ALL FASTENERS TO BE PNEUTEK K64.
3. REF. SECTOR PLANS FOR DECK GAUGE.
4. ✱ INDICATES DOUBLE FASTENER PATTERN TO CMU WALLS AND DRAGS. I.E. 35/14.

CONN. TYPE	FASTENER PATTERN	SIDE LAP CONN.
TYPE 1	32/7	VSC2@4
TYPE 2	-	VSC2@
TYPE 3	-	VSC2@

1 ROOF DIAPHRAGM ATTACHMENT PLAN
1/16" = 1'-0"

BRIC ARCHITECTURE, INC.
1233 NW NORTHRUP STREET, SUITE 100
PORTLAND, OR 97209 T 503.595.4900

New Middle School / High School
Seaside School District
1801 S. FRANKLIN STREET, SEASIDE, OREGON 97138
t: 503-738-5591

kpff
111 SW Fifth Ave., Suite 2500
Portland, OR 97204
O: 503.227.3251
F: 503.227.7980
www.kpff.com
10021700078R17

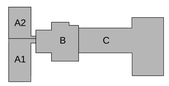

phase	BP2-PERMIT SET
date	6/15/2018
revisions	
project #	17007

ROOF DIAPHRAGM ATTACHMENT PLAN

S0.41

6/14/2018 12:12:53 PM
C:\1REVIT\100217000 78_Courtney.Bradshaw@kpff.com.rvt

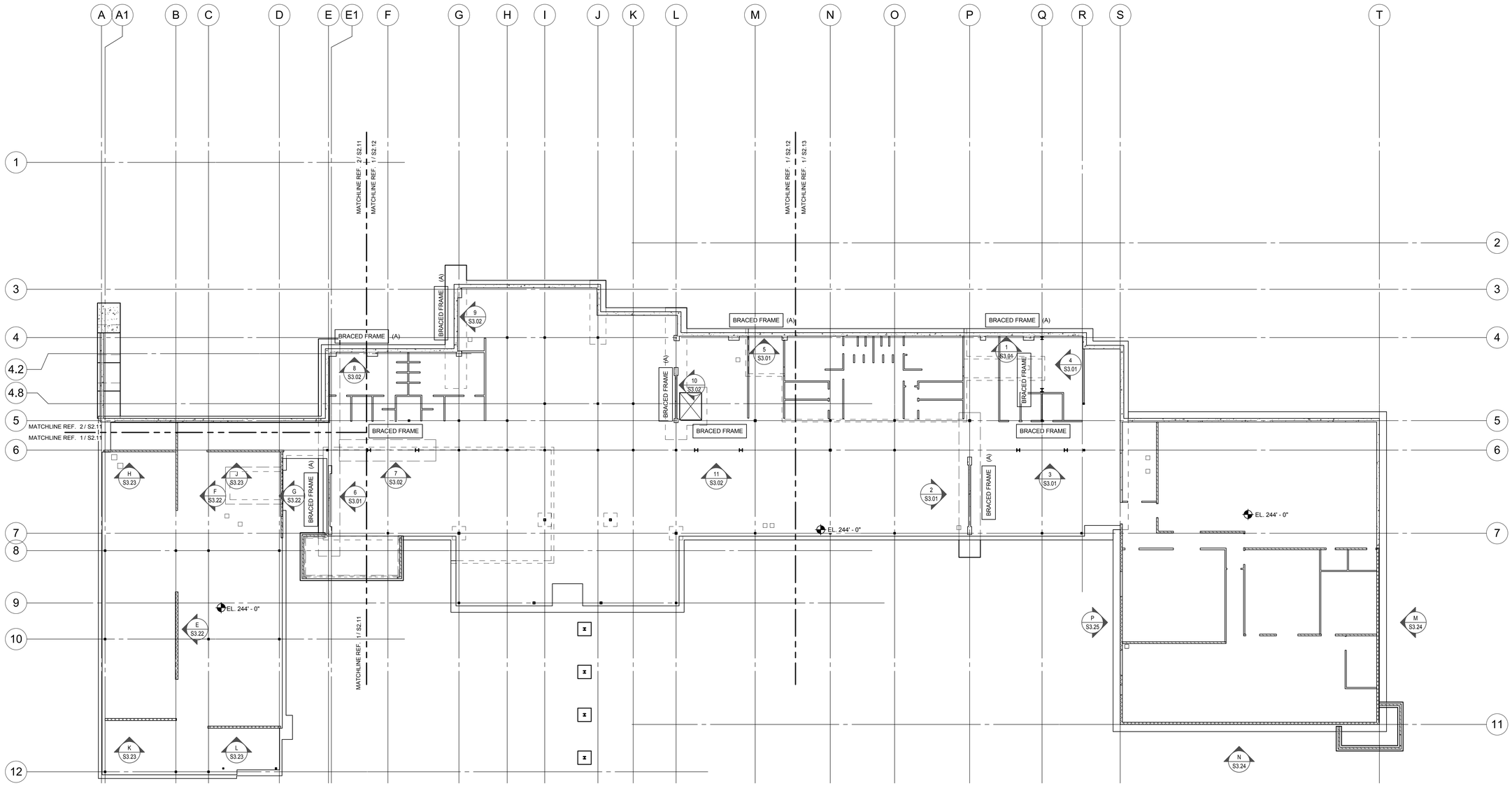

1 OVERALL FOUNDATION PLAN
1/16" = 1'-0"

BR|IC
ARCHITECTURE, INC.
1233 NW NORTHRUP STREET, SUITE 100
PORTLAND, OR 97209 T 503 595 4900

New Middle School / High School
Seaside School District
1801 S. FRANKLIN STREET, SEASIDE, OREGON 97138
t: 503-738-5591

kpff
111 SW Fifth Ave., Suite 2500
Portland, OR 97204
O: 503.227.3251
F: 503.227.7980
www.kpff.com
10021700078R17

STRUCTURAL REGISTERED PROFESSIONAL ENGINEER 15,773 OREGON JUN. 21, 1997 GERALD L. ABDIE
EXPIRES 12-31-19

phase	BP2-PERMIT SET
date	6/15/2018
revisions	
project #	17007

OVERALL FOUNDATION PLAN - LEVEL 1

S2.01

6/14/2018 12:09:06 PM
C:\1REVIT\10021700078_Courtney.Bradshaw@kpff.com.rvt

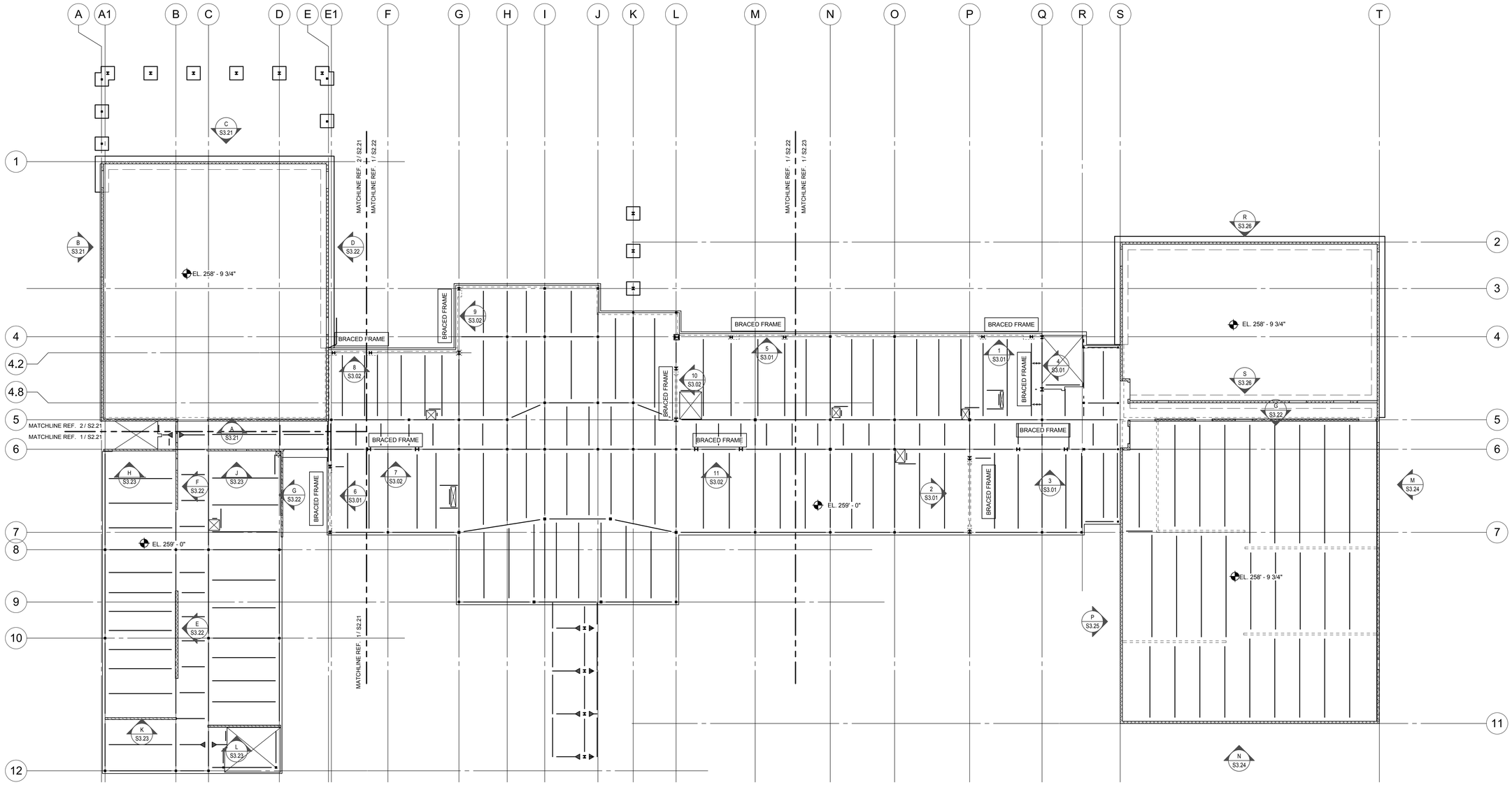

1 OVERALL FRAMING PLAN - LEVEL 2
1/16" = 1'-0"

BR|IC
ARCHITECTURE, INC.
1233 NW NORTHRUP STREET, SUITE 100
PORTLAND, OR 97209 T 503 595 4900

New Middle School / High School
Seaside School District
1801 S. FRANKLIN STREET, SEASIDE, OREGON 97138
t: 503-738-5591

kpff
111 SW Fifth Ave., Suite 2500
Portland, OR 97204
O: 503.227.3251
F: 503.227.7980
www.kpff.com
10021700078R17

STRUCTURAL REGISTERED PROFESSIONAL ENGINEER 15,773 OREGON JAN. 21, 1992 GERALD L. ABDIE
EXPIRES 12-31-19

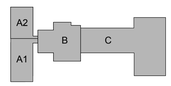

phase	BP2-PERMIT SET
date	6/15/2018
revisions	
project #	17007

OVERALL FRAMING PLAN - LEVEL 2

S2.02

6/14/2018 12:09:08 PM
C:\1REVIT\10021700078_Courtney.Bradshaw@kpff.com.rvt

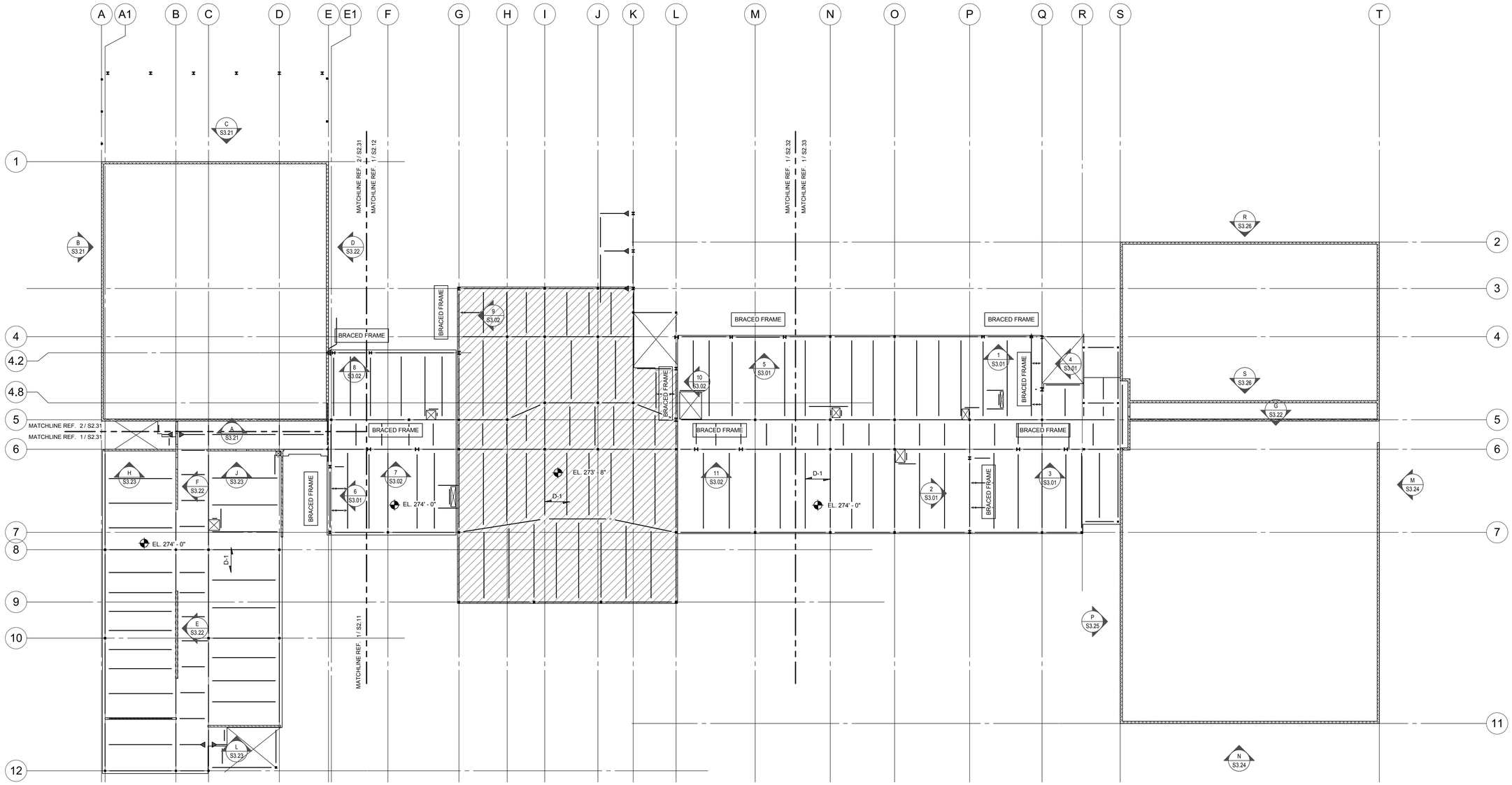

1 OVERALL FRAMING PLAN - LEVEL 3
1/16" = 1'-0"

BR|IC
ARCHITECTURE, INC.
1233 NW NORTHRUP STREET, SUITE 100
PORTLAND, OR 97209 T 503 595 4900

New Middle School / High School
Seaside School District
1801 S. FRANKLIN STREET, SEASIDE, OREGON 97138
t: 503-738-5591

kpff
111 SW Fifth Ave., Suite 2500
Portland, OR 97204
O: 503.227.3251
F: 503.227.7980
www.kpff.com
10021700078R17

STRUCTURAL REGISTERED PROFESSIONAL ENGINEER 15,773 OREGON JAN. 21, 1992 JERALD L. ABDIE
EXPIRES 12-31-19

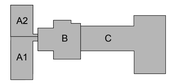

phase	BP2-PERMIT SET
date	6/15/2018
revisions	
project #	17007

OVERALL FRAMING PLAN - LEVEL 3

S2.03

6/14/2018 12:09:10 PM
C:\1REVIT\10021700078_Courtney.Bradshaw@kpff.com.rvt

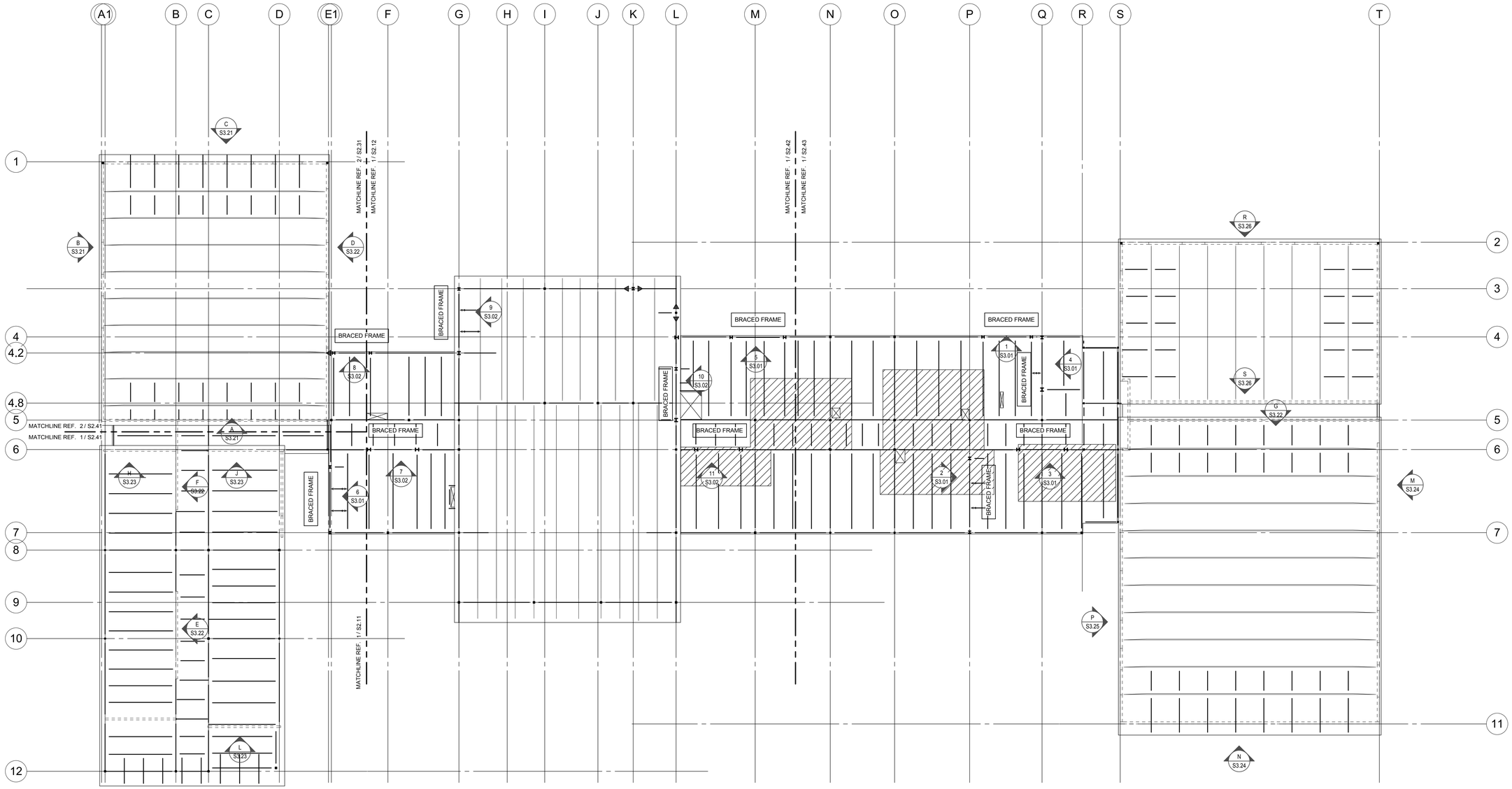

1 OVERALL FRAMING PLAN - ROOF
1/16" = 1'-0"

BR|IC
ARCHITECTURE, INC.
1233 NW NORTHRUP STREET, SUITE 100
PORTLAND, OR 97209 T 503 595 4900

New Middle School / High School
Seaside School District
1801 S. FRANKLIN STREET, SEASIDE, OREGON 97138
t: 503-738-5591

kpff
111 SW Fifth Ave., Suite 2500
Portland, OR 97204
O: 503.227.3251
F: 503.227.7980
www.kpff.com
10021700078R17

STRUCTURAL
REGISTERED PROFESSIONAL ENGINEER
15,773
OREGON
JAN. 21, 1997
JERALD L. ABDIE
EXPIRES 12-31-19

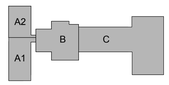

phase	BP2-PERMIT SET
date	6/15/2018
revisions	
project #	17007

OVERALL FRAMING PLAN - ROOF

S2.04

6/14/2018 12:09:11 PM
C:\1REVIT\10021700078_Courtney.Bradshaw@kpff.com.rvt

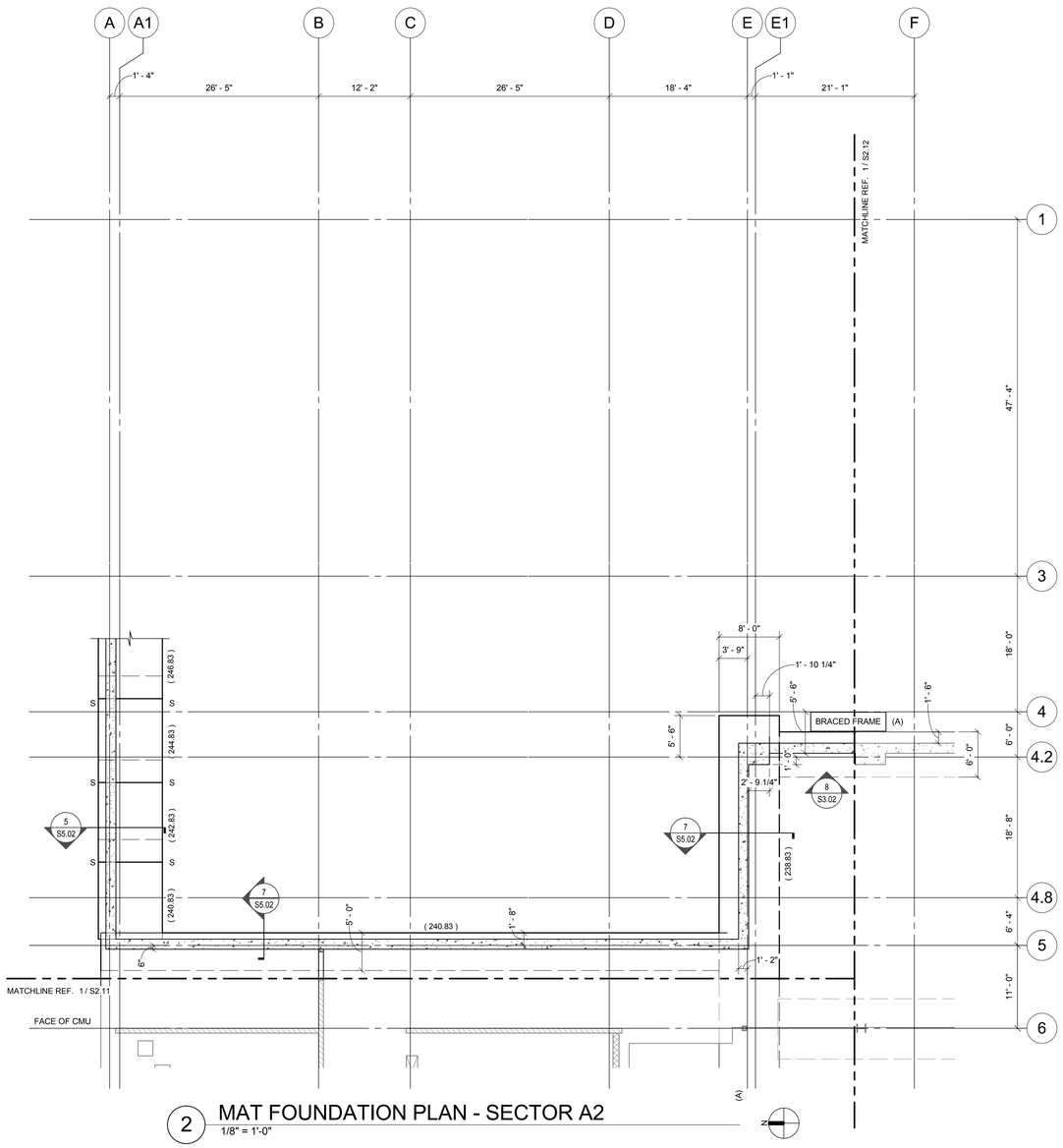

2 MAT FOUNDATION PLAN - SECTOR A2
1/8" = 1'-0"

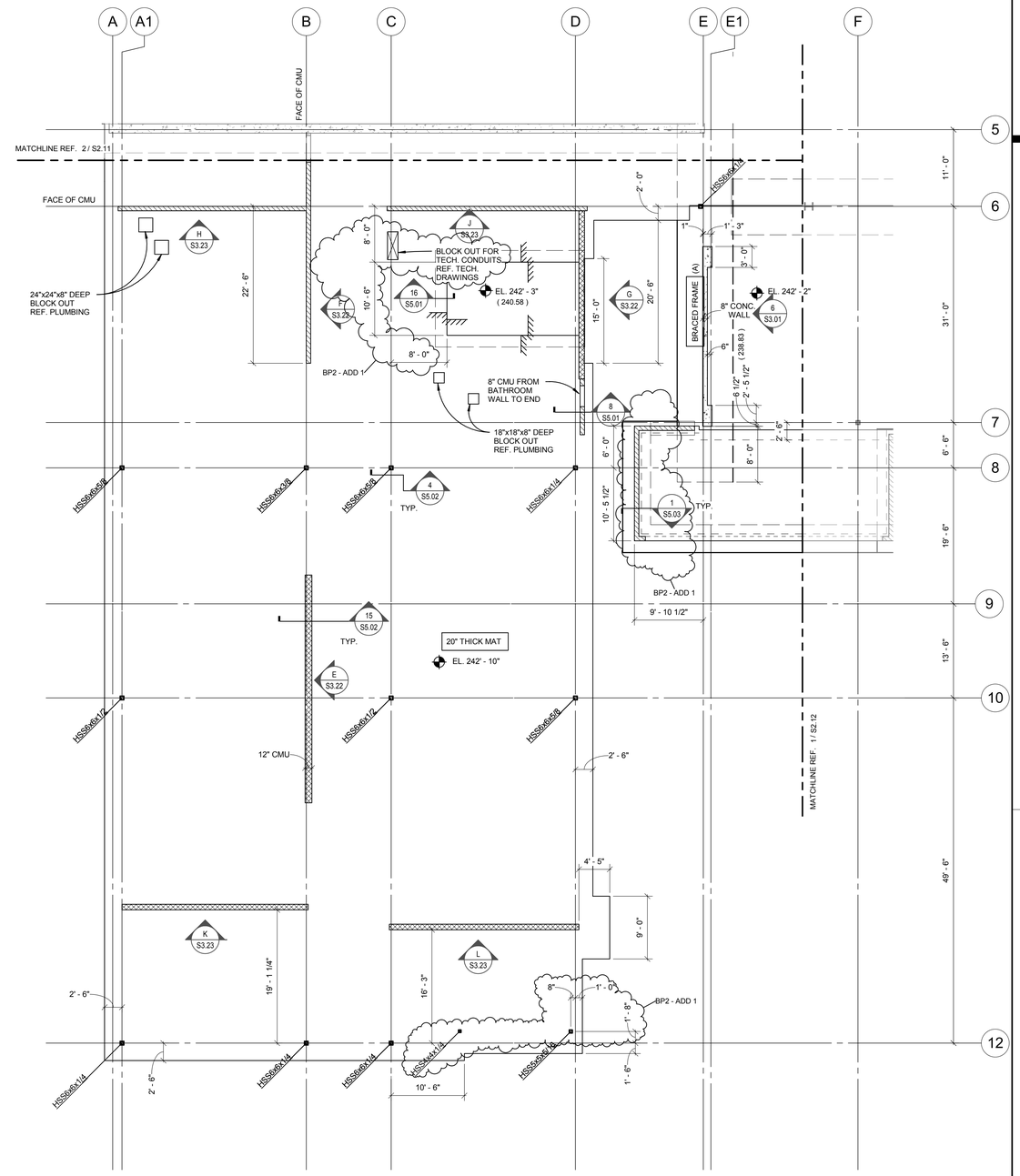

1 MAT FOUNDATION PLAN - SECTOR A1
1/8" = 1'-0"

SPREAD FOOTING SCHEDULE

MARK	SIZE LENGTHxWIDTH	"T"	REINFORCING
A	5'-0"x5'-0"	1'-6"	(5) #6 EACH WAY TOP & BOTTOM

WALL FOOTING SCHEDULE

MARK	WIDTH	THICKNESS	LONGITUDINAL REINFORCING	TRANSVERSE REINFORCING
W1	2'-0"	1'-0"	(3) #5	#4 @ 9" o.c.
W2	5'-0"	1'-6"	(5) #6	#5 @ 9" o.c.

NOTES:

1. EL. XXX'-XX" INDICATES TOP OF SLAB ELEVATION.
2. INDICATES STEP IN ELEVATION REF. 15/S5.01 FOR STEP IN SLAB ON GRADE. OR 16/S5.01 FOR STEP IN MAT FOUNDATION.
3. INDICATES STEPPED FOOTING. REF. 13/S5.01 FOR STEP IN STRIP FOOTING.
4. REF. SHEET S5.01 AND S5.02 FOR TYPICAL CONCRETE DETAILS.
5. INDICATES 6" NON-STRUCTURAL CMU WALL. GROUT ALL REINFORCED CELLS. REF. GEN. STRUCT. NOTES FOR REINF.
6. INDICATES 8" CMU SOLID GROUTED SHEAR WALL. REF. GENERAL STRUCTURAL NOTES FOR WALL REINF. U.N.O.
7. INDICATES 10" CMU SOLID GROUTED SHEAR WALL. REF. GENERAL STRUCTURAL NOTES FOR WALL REINF. U.N.O.
8. INDICATES CONCRETE RETAINING WALL.
9. REF. ARCH. FOR SLAB EDGE DIMENSIONS.
10. REF. ARCH. FOR CMU WALL LOCATIONS AND OPENINGS.
11. REF. CIVIL AND LANDSCAPE DRAWINGS FOR SITE RETAINING WALLS.
12. REF. CIVIL AND LANDSCAPE DRAWINGS FOR EXTERIOR GRADE AND COORDINATE w/ FOUNDATION ELEVATIONS.
13. X / -XX.XX" INDICATES FOOTING TYPE REF. SCHEDULE. INDICATES TOP OF FOOTING ELEVATION.

BR|IC ARCHITECTURE, INC.
1233 NW NORTHRUP STREET, SUITE 100
PORTLAND, OR 97209 T 503.595.4900

New Middle School / High School
Seaside School District
1801 S. FRANKLIN STREET, SEASIDE, OREGON 97138
t: 503-738-5591

kpff
111 SW Fifth Ave., Suite 2500
Portland, OR 97204
O: 503.227.3251
F: 503.227.7980
www.kpff.com
10021700078R17

STRUCTURAL REGISTERED PROFESSIONAL ENGINEER 15-773 OREGON JAN. 21, 1983 GERALD L. ADOLFE
EXPIRES 12-31-19

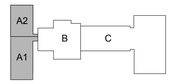

phase	BP2-PERMIT SET
date	6/15/2018
revisions	
BP2 - ADD 1	07/05/2018
project #	17007

MAT FOUNDATION PLAN - SECTOR A

S2.11

7/3/2018 2:43:51 PM
C:\1REVIT\10021700078_Courtney.Bradshaw@kpff.com.rvt

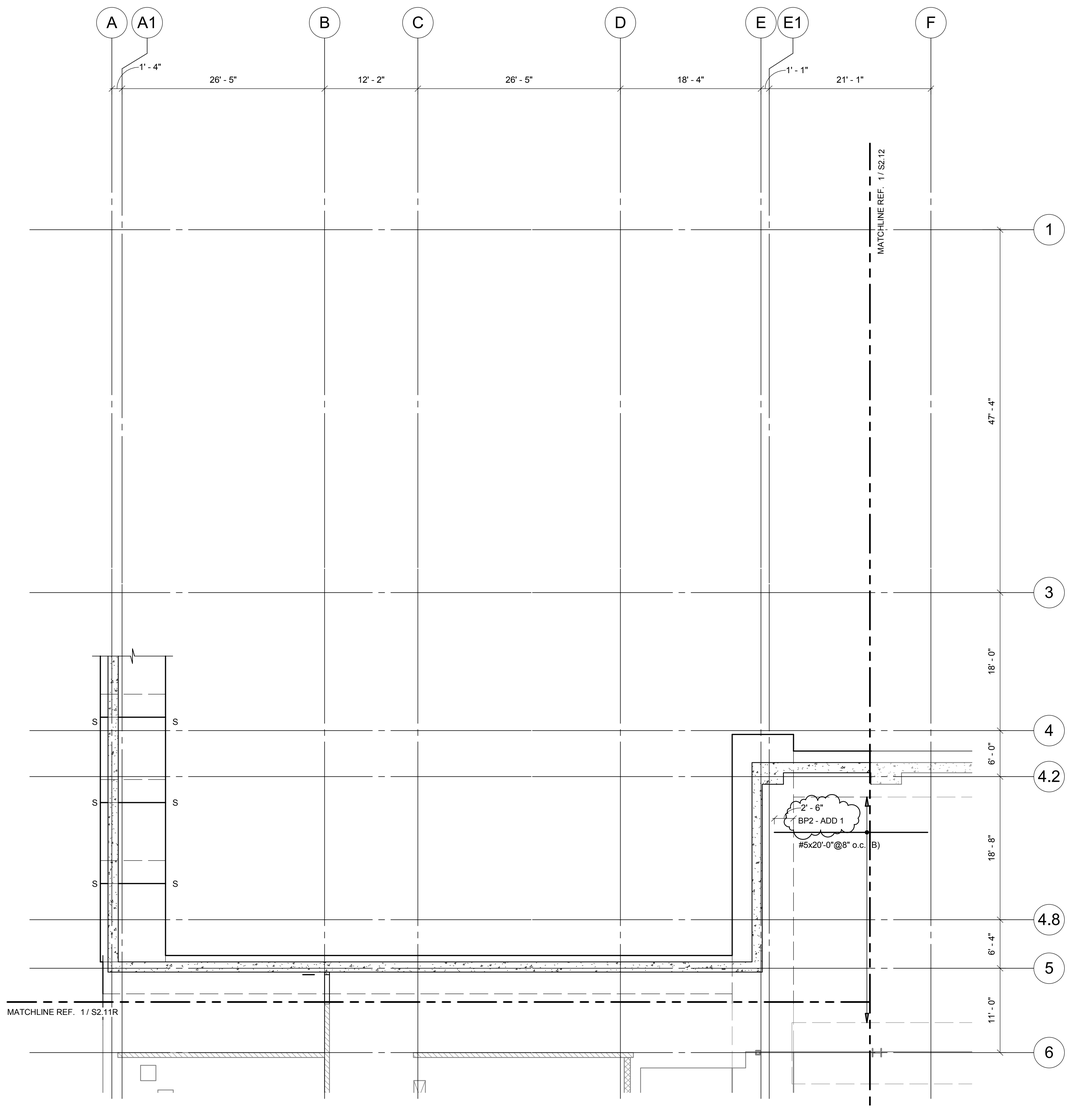

2 MAT FOUNDATION REINFORCING PLAN - SECTOR A2
1/8" = 1'-0"

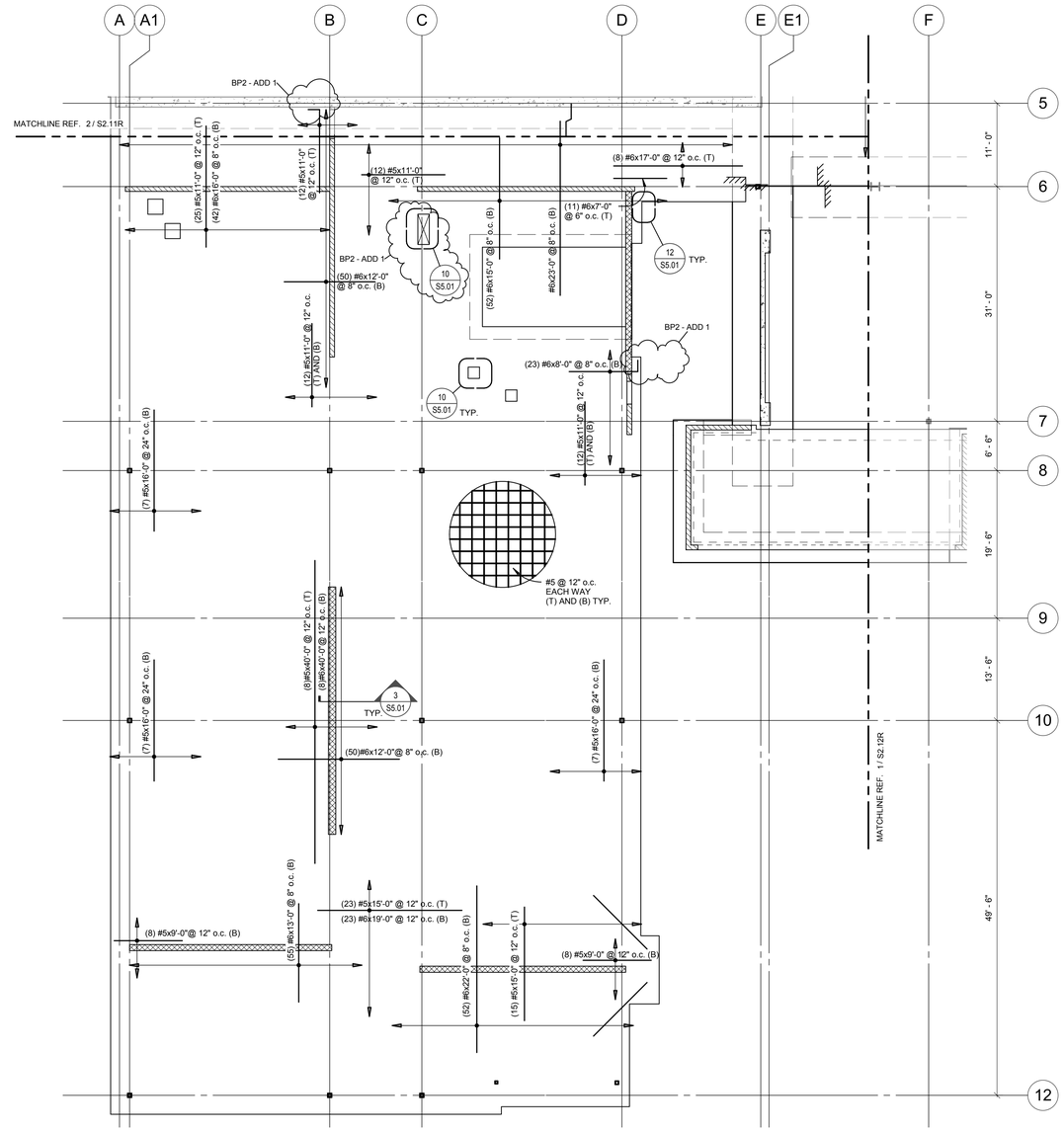

1 MAT FOUNDATION REINFORCING PLAN - SECTOR A1
1/8" = 1'-0"

NOTES:

1. INDIVIDUAL REINFORCING SHOWN IS IN ADDITIONAL TO DISTRIBUTED REINF. U.N.O.

BR|IC ARCHITECTURE, INC.
1233 NW NORTHRUP STREET, SUITE 100
PORTLAND, OR 97209 T 503 595 4900

New Middle School / High School
Seaside School District
1801 S. FRANKLIN STREET, SEASIDE, OREGON 97138
t: 503-738-5591

kpff
111 SW Fifth Ave., Suite 2500
Portland, OR 97204
O: 503.227.3251
F: 503.227.7980
www.kpff.com
10021700078R17

STRUCTURAL
REGISTERED PROFESSIONAL ENGINEER
15,773
OREGON
JAN. 21, 1997
JERALD L. ABDIE
EXPIRES 12-31-19

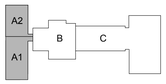

phase	BP2-PERMIT SET
date	6/15/2018
revisions	
BP2 - ADD 1	07/05/2018
project #	17007

MAT FOUNDATION REINFORCING PLAN - SECTOR A

S2.11R

7/3/2018 2:43:54 PM
C:\1REVIT\10021700078_Courtney.Bradshaw@kpff.com.rvt

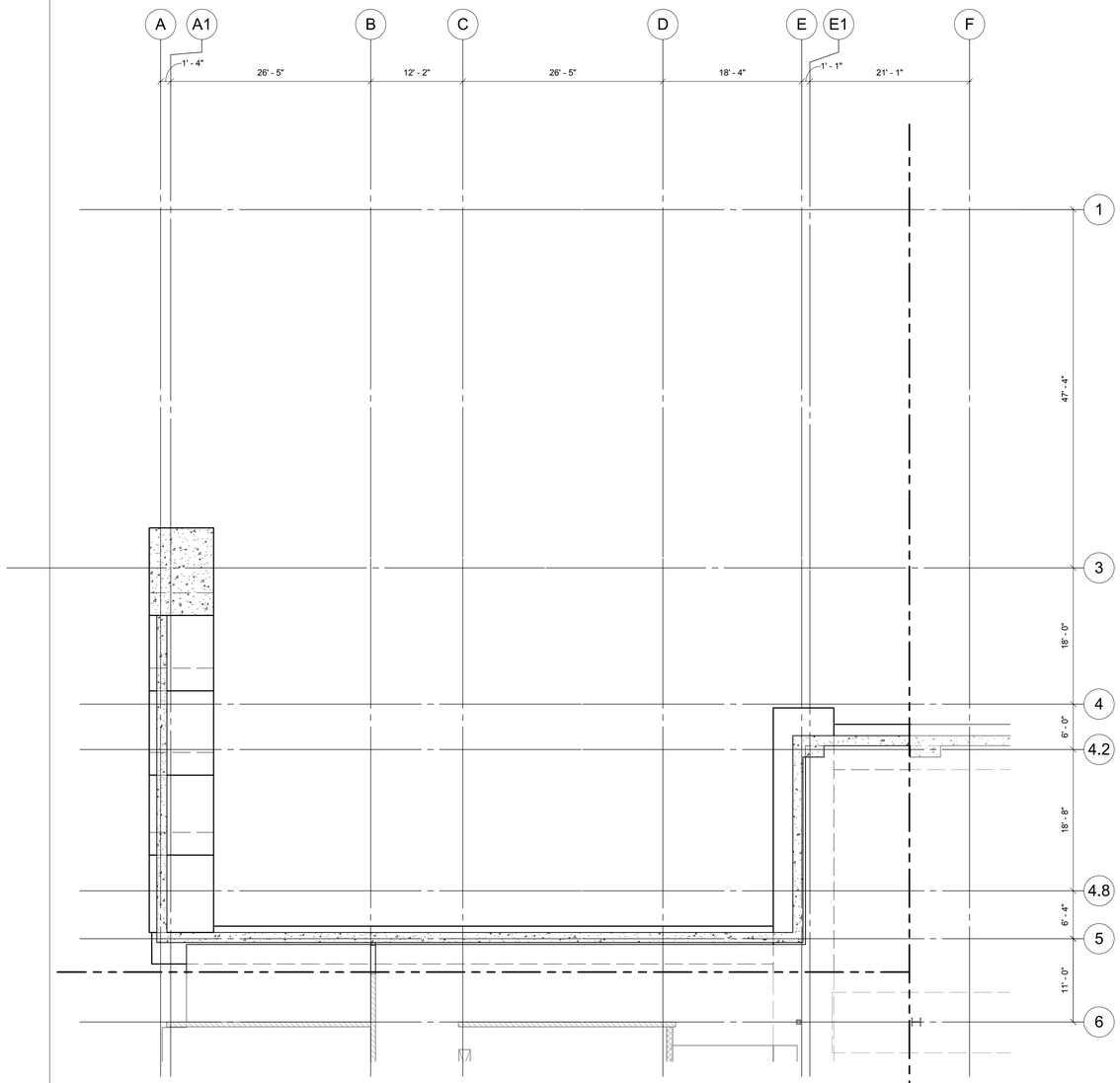

2 SLAB ON GRADE PLAN - SECTOR A2
1/8" = 1'-0"

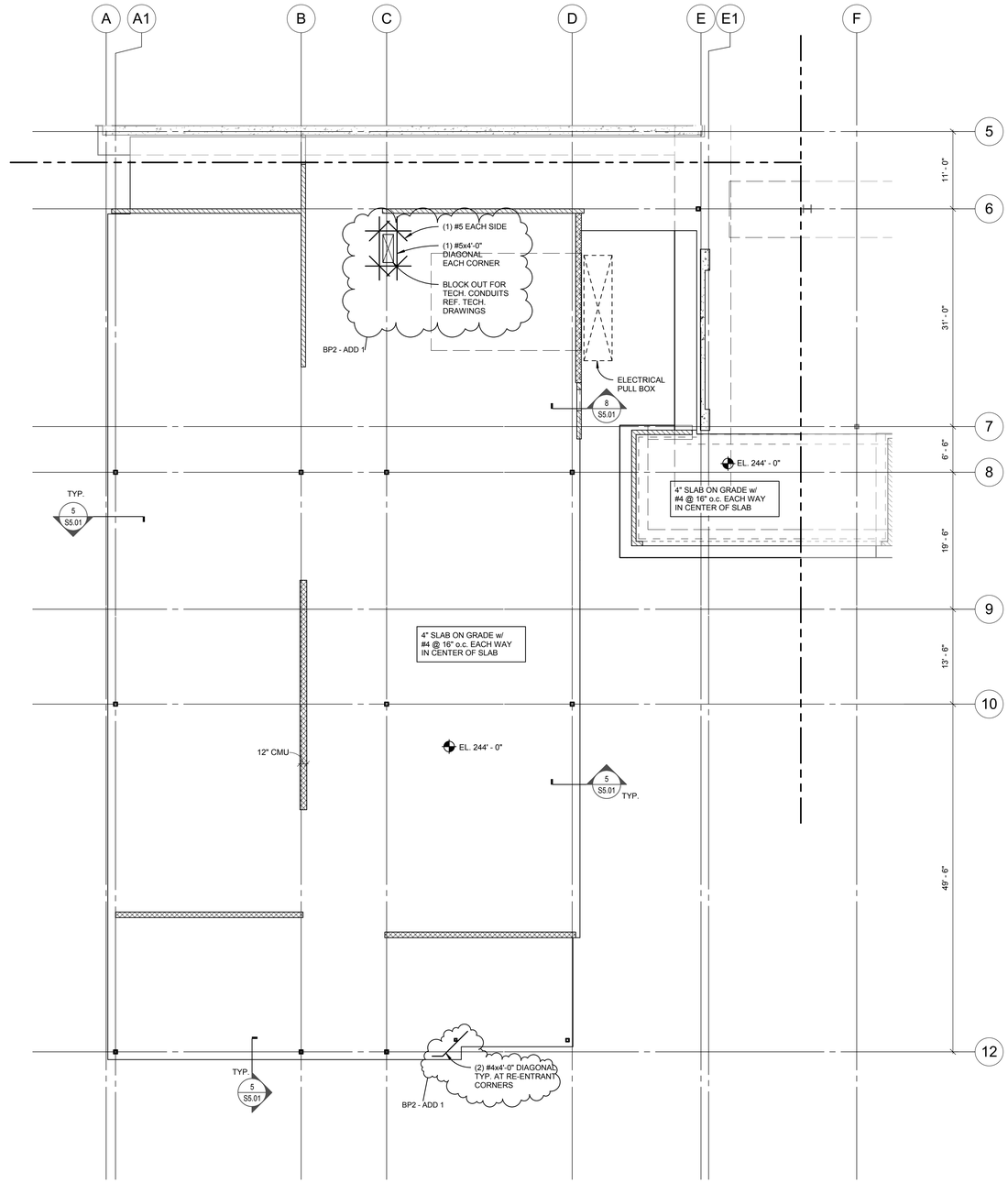

1 SLAB ON GRADE PLAN - SECTOR A1
1/8" = 1'-0"

NOTES:

1. EL. XXX'-XX" INDICATES TOP OF SLAB ELEVATION.
2. INDICATES STEP IN ELEVATION REF. 15/S5.01 FOR STEP IN SLAB ON GRADE. OR 16/S5.01 FOR STEP IN MAT FOUNDATION.
3. S S INDICATES STEPPED FOOTING. REF. 13/S5.01 FOR STEP IN STRIP FOOTING.
4. REF. SHEET S5.01 AND S5.02 FOR TYPICAL CONCRETE DETAILS.
5. INDICATES 6" NON-STRUCTURAL CMU WALL. GROUT ALL REINFORCED CELLS. REF. GEN. STRUCT. NOTES FOR REINF.
6. INDICATES 8" CMU SOLID GROUTED SHEAR WALL. REF. GENERAL STRUCTURAL NOTES FOR WALL REINF. U.N.O.
7. INDICATES 10" CMU SOLID GROUTED SHEAR WALL. REF. GENERAL STRUCTURAL NOTES FOR WALL REINF. U.N.O.
8. INDICATES CONCRETE RETAINING WALL.
9. REF. ARCH. FOR SLAB EDGE DIMENSIONS.
10. REF. ARCH. FOR CMU WALL LOCATIONS AND OPENINGS.
11. REF. CIVIL AND LANDSCAPE DRAWINGS FOR SITE RETAINING WALLS.
12. REF. CIVIL AND LANDSCAPE DRAWINGS FOR EXTERIOR GRADE AND COORDINATE w/ FOUNDATION ELEVATIONS.
13. X -XX.XX INDICATES FOOTING TYPE REF. SCHEDULE. INDICATES TOP OF FOOTING ELEVATION.

BR|IC ARCHITECTURE, INC.
1233 NW NORTHRUP STREET, SUITE 100
PORTLAND, OR 97209 T 503.595.4900

New Middle School / High School
Seaside School District
1801 S. FRANKLIN STREET, SEASIDE, OREGON 97138
t: 503-738-5591

kpff
111 SW Fifth Ave., Suite 2500
Portland, OR 97204
O: 503.227.3251
F: 503.227.7980
www.kpff.com
10021700078R17

STRUCTURAL REGISTERED PROFESSIONAL ENGINEER 15-773 OREGON FEB. 21, 1989 JERALD L. ABUTE
EXPIRES 12-31-19

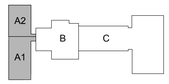

phase	BP2-PERMIT SET
date	6/15/2018
revisions	
BP2 - ADD 1	07/05/2018
project #	17007

SLAB ON GRADE PLAN - SECTOR A

S2.11S

7/3/2018 2:43:57 PM
C:\LREVIT\L10021700078_Courtney.Bradshaw@kpff.com.rvt

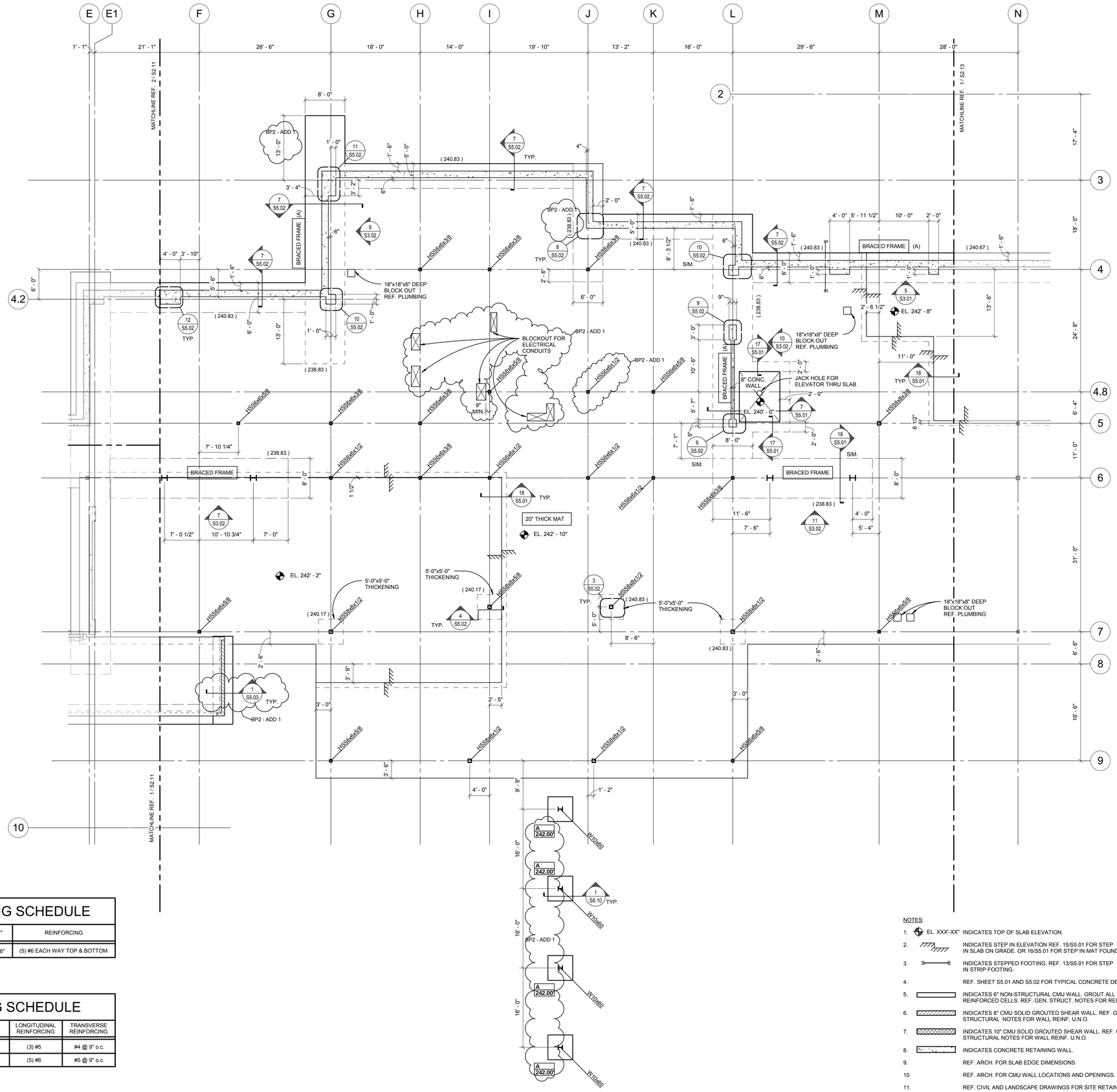

SPREAD FOOTING SCHEDULE

MARK	SIZE LENGTHxWIDTH	"T"	REINFORCING
A	5'-0"x5'-0"	1'-6"	(5) #6 EACH WAY TOP & BOTTOM

WALL FOOTING SCHEDULE

MARK	WIDTH	THICKNESS	LONGITUDINAL REINFORCING	TRANSVERSE REINFORCING
W1	2'-0"	1'-0"	(3) #5	#4 @ 9" o.c.
W2	5'-0"	1'-6"	(5) #6	#5 @ 9" o.c.

1 MAT FOUNDATION PLAN - SECTOR B
1/8" = 1'-0"

NOTES:

1. EL. XXX'-XX" INDICATES TOP OF SLAB ELEVATION.
2. INDICATES STEP IN ELEVATION REF. 15/S5.01 FOR STEP IN SLAB ON GRADE. OR 16/S5.01 FOR STEP IN MAT FOUNDATION.
3. INDICATES STEPPED FOOTING. REF. 13/S5.01 FOR STEP IN STRIP FOOTING.
4. REF. SHEET S5.01 AND S5.02 FOR TYPICAL CONCRETE DETAILS.
5. INDICATES 6" NON-STRUCTURAL CMU WALL. GROUT ALL REINFORCED CELLS. REF. GEN. STRUCT. NOTES FOR REINF.
6. INDICATES 8" CMU SOLID GROUTED SHEAR WALL. REF. GENERAL STRUCTURAL NOTES FOR WALL REINF. U.N.O.
7. INDICATES 10" CMU SOLID GROUTED SHEAR WALL. REF. GENERAL STRUCTURAL NOTES FOR WALL REINF. U.N.O.
8. INDICATES CONCRETE RETAINING WALL.
9. REF. ARCH. FOR SLAB EDGE DIMENSIONS.
10. REF. ARCH. FOR CMU WALL LOCATIONS AND OPENINGS.
11. REF. CIVIL AND LANDSCAPE DRAWINGS FOR SITE RETAINING WALLS.
12. REF. CIVIL AND LANDSCAPE DRAWINGS FOR EXTERIOR GRADE AND COORDINATE w/ FOUNDATION ELEVATIONS.
13. X / -XX.XX' INDICATES FOOTING TYPE REF. SCHEDULE. INDICATES TOP OF FOOTING ELEVATION.

BR|IC ARCHITECTURE, INC.
1233 NW NORTHRUP STREET, SUITE 100
PORTLAND, OR 97209 T 503 595 4900

New Middle School / High School
Seaside School District
1801 S. FRANKLIN STREET, SEASIDE, OREGON 97138
t: 503-738-5591

kpff
111 SW Fifth Ave., Suite 2500
Portland, OR 97204
O: 503.227.3251
F: 503.227.7980
www.kpff.com
10021700078R17

STRUCTURAL REGISTERED PROFESSIONAL ENGINEER 15,773 OREGON JAN. 21, 1997 JERALD L. ABDIE
EXPIRES 12-31-19

phase	BP2-PERMIT SET
date	6/15/2018
revisions	
BP2 - ADD 1	07/05/2018
project #	17007

MAT FOUNDATION PLAN - SECTOR B

S2.12

7/3/2018 2:44:00 PM
C:\LREVIT\10021700078_Courtney.Bradshaw@kpff.com.rvt

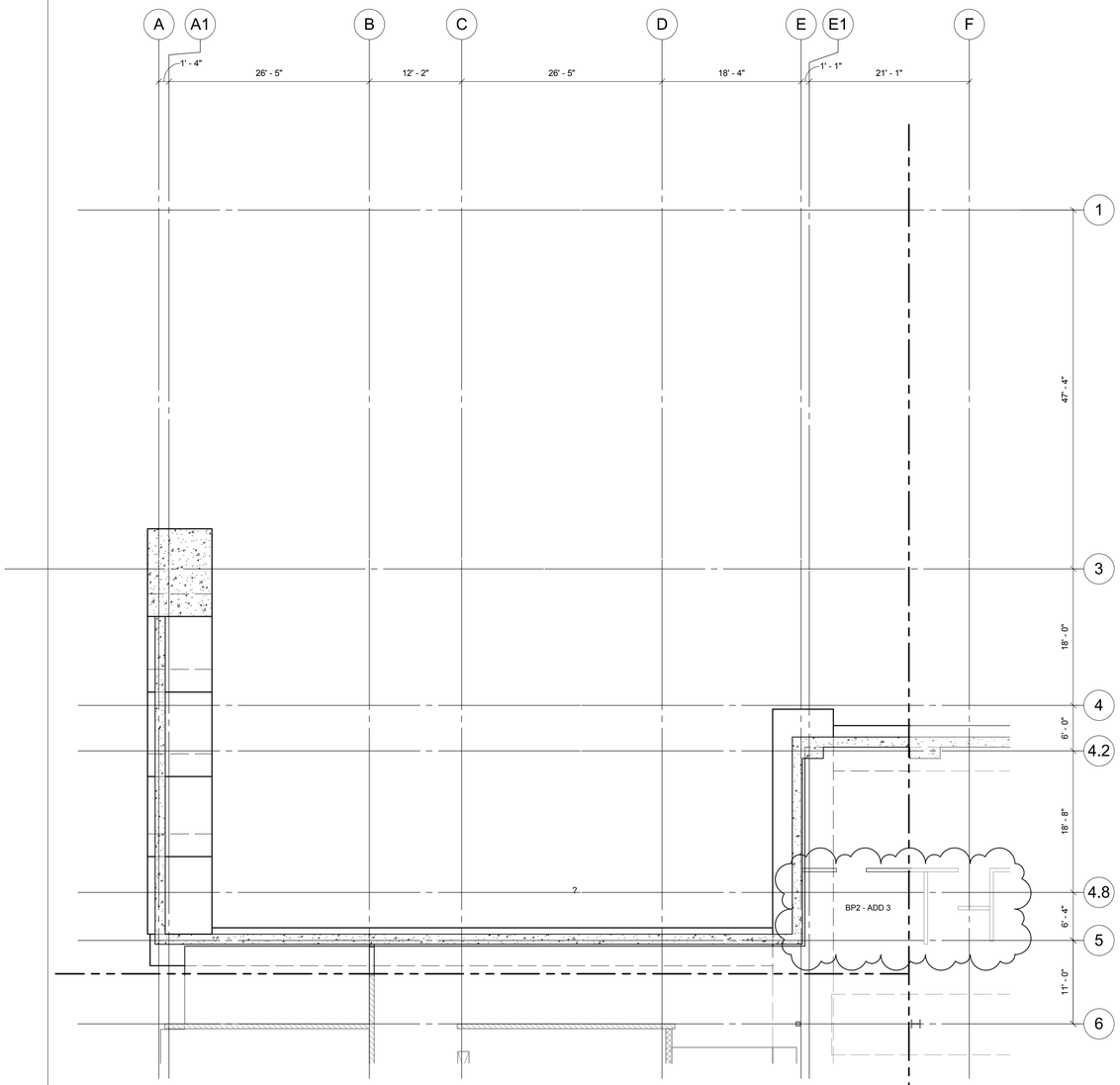

2 SLAB ON GRADE PLAN - SECTOR A2
1/8" = 1'-0"

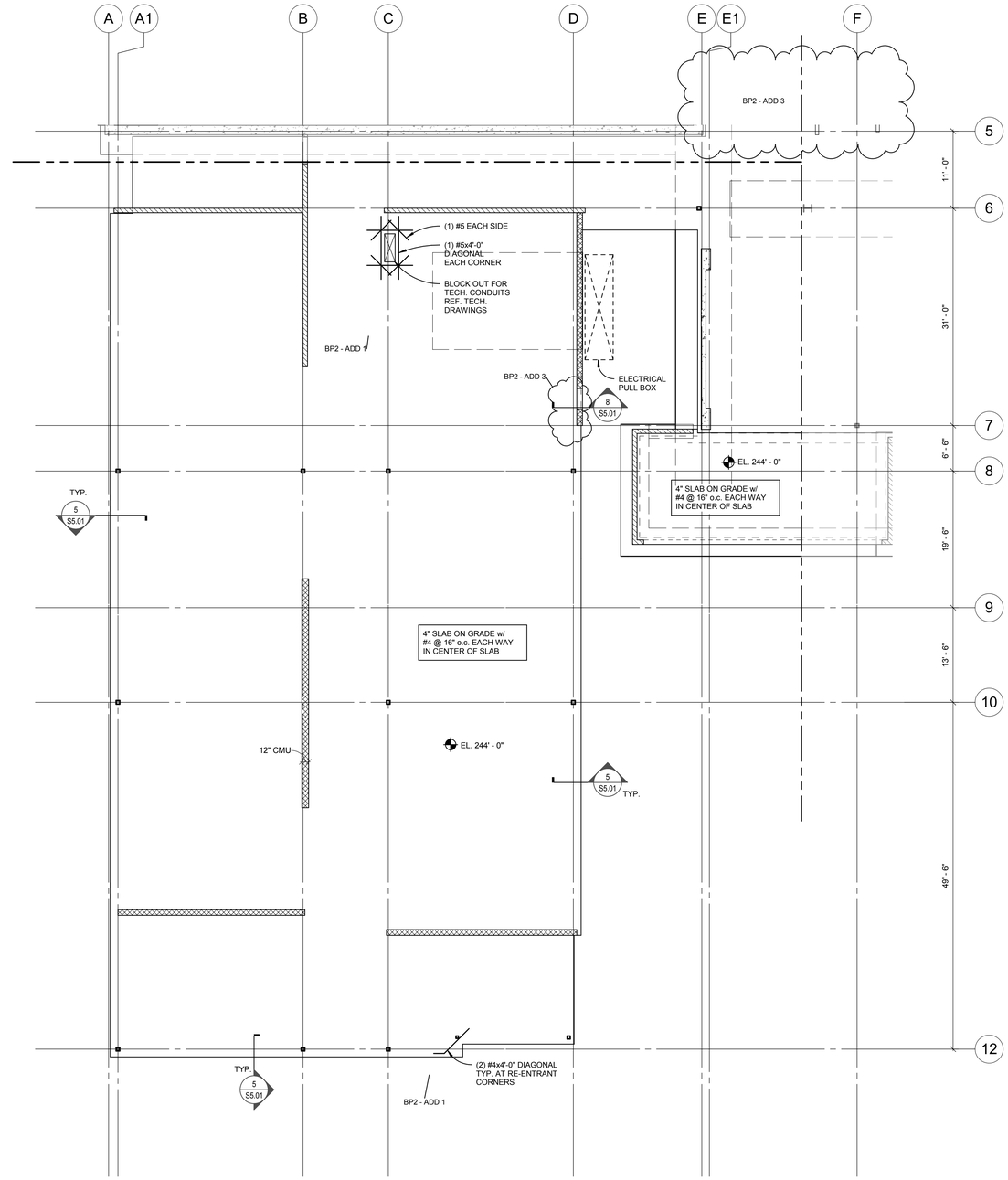

1 SLAB ON GRADE PLAN - SECTOR A1
1/8" = 1'-0"

NOTES:

1. EL. XXX'-XX" INDICATES TOP OF SLAB ELEVATION.
2. INDICATES STEP IN ELEVATION REF. 15/S5.01 FOR STEP IN SLAB ON GRADE. OR 16/S5.01 FOR STEP IN MAT FOUNDATION.
3. S S INDICATES STEPPED FOOTING. REF. 13/S5.01 FOR STEP IN STRIP FOOTING.
4. REF. SHEET S5.01 AND S5.02 FOR TYPICAL CONCRETE DETAILS.
5. INDICATES 6" NON-STRUCTURAL CMU WALL. GROUT ALL REINFORCED CELLS. REF. GEN. STRUCT. NOTES FOR REINF.
6. INDICATES 8" CMU SOLID GROUTED SHEAR WALL. REF. GENERAL STRUCTURAL NOTES FOR WALL REINF. U.N.O.
7. INDICATES 10" CMU SOLID GROUTED SHEAR WALL. REF. GENERAL STRUCTURAL NOTES FOR WALL REINF. U.N.O.
8. INDICATES CONCRETE RETAINING WALL.
9. REF. ARCH. FOR SLAB EDGE DIMENSIONS.
10. REF. ARCH. FOR CMU WALL LOCATIONS AND OPENINGS.
11. REF. CIVIL AND LANDSCAPE DRAWINGS FOR SITE RETAINING WALLS.
12. REF. CIVIL AND LANDSCAPE DRAWINGS FOR EXTERIOR GRADE AND COORDINATE w/ FOUNDATION ELEVATIONS.
13. X -XX.XX' INDICATES FOOTING TYPE REF. SCHEDULE. INDICATES TOP OF FOOTING ELEVATION.

BR|IC ARCHITECTURE, INC.
1233 NW NORTHRUP STREET, SUITE 100
PORTLAND, OR 97209 T 503 595 4900

New Middle School / High School

Seaside School District
1801 S. FRANKLIN STREET, SEASIDE, OREGON 97138
t: 503-738-5591

kpff
111 SW Fifth Ave., Suite 2500
Portland, OR 97204
O: 503.227.3251
F: 503.227.7980
www.kpff.com
10021700078R17

STRUCTURAL REGISTERED PROFESSIONAL ENGINEER 15,773 OREGON JAN. 21, 1992 JERALD L. ABDIE
EXPIRES 12-31-19

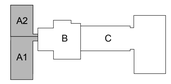

phase	BP2-PERMIT SET
date	6/15/2018
revisions	
BP2 - ADD 1	07/05/2018
BP2 - ADD 3	07/13/2018
project #	17007

SLAB ON GRADE PLAN - SECTOR A

S2.11S

7/16/2018 1:06:44 PM
C:\1REVIT\10021700078_thong.lam@kpff.com.rvt

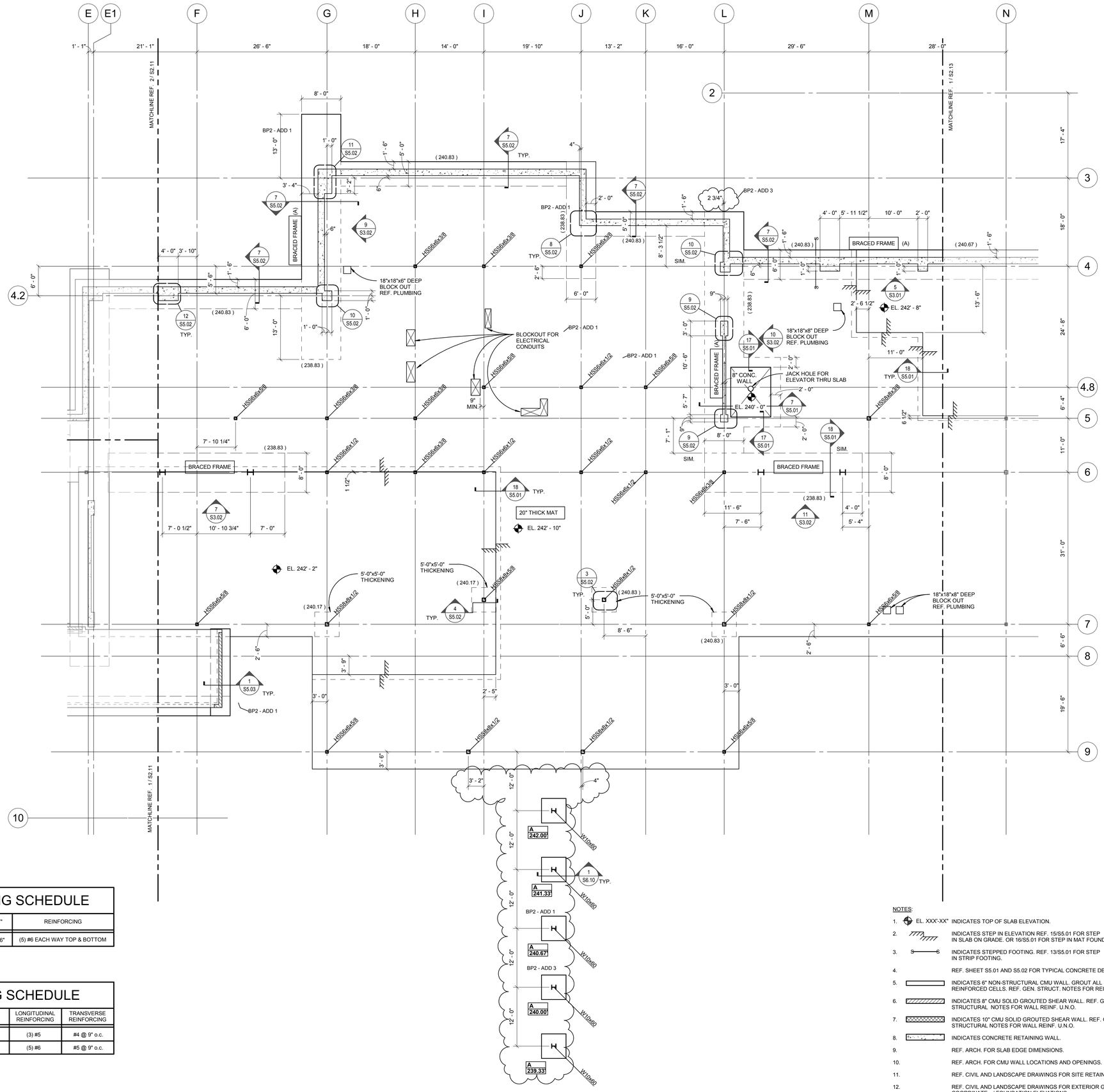

SPREAD FOOTING SCHEDULE

MARK	SIZE LENGTHxWIDTH	"T"	REINFORCING
A	5'-0"x5'-0"	1'-6"	(5) #6 EACH WAY TOP & BOTTOM

WALL FOOTING SCHEDULE

MARK	WIDTH	THICKNESS	LONGITUDINAL REINFORCING	TRANSVERSE REINFORCING
W1	2'-0"	1'-0"	(3) #5	#4 @ 9" o.c.
W2	5'-0"	1'-6"	(5) #6	#5 @ 9" o.c.

1 MAT FOUNDATION PLAN - SECTOR B
1/8" = 1'-0"

NOTES:

1. EL. XXX'-XX" INDICATES TOP OF SLAB ELEVATION.
2. INDICATES STEP IN ELEVATION REF. 15/S5.01 FOR STEP IN SLAB ON GRADE. OR 16/S5.01 FOR STEP IN MAT FOUNDATION.
3. INDICATES STEPPED FOOTING. REF. 13/S5.01 FOR STEP IN STRIP FOOTING.
4. REF. SHEET S5.01 AND S5.02 FOR TYPICAL CONCRETE DETAILS.
5. INDICATES 6" NON-STRUCTURAL CMU WALL. GROUT ALL REINFORCED CELLS. REF. GEN. STRUCT. NOTES FOR REINF.
6. INDICATES 8" CMU SOLID GROUTED SHEAR WALL. REF. GENERAL STRUCTURAL NOTES FOR WALL REINF. U.N.O.
7. INDICATES 10" CMU SOLID GROUTED SHEAR WALL. REF. GENERAL STRUCTURAL NOTES FOR WALL REINF. U.N.O.
8. INDICATES CONCRETE RETAINING WALL.
9. REF. ARCH. FOR SLAB EDGE DIMENSIONS.
10. REF. ARCH. FOR CMU WALL LOCATIONS AND OPENINGS.
11. REF. CIVIL AND LANDSCAPE DRAWINGS FOR SITE RETAINING WALLS.
12. REF. CIVIL AND LANDSCAPE DRAWINGS FOR EXTERIOR GRADE AND COORDINATE w/ FOUNDATION ELEVATIONS.
13. X / -XX.XX' INDICATES FOOTING TYPE REF. SCHEDULE. INDICATES TOP OF FOOTING ELEVATION.

BR|IC ARCHITECTURE, INC.
1233 NW NORTHRUP STREET, SUITE 100
PORTLAND, OR 97209 T 503 595 4900

New Middle School / High School
Seaside School District
1801 S. FRANKLIN STREET, SEASIDE, OREGON 97138
t: 503-738-5591

kpff
111 SW Fifth Ave., Suite 2500
Portland, OR 97204
O: 503.227.3251
F: 503.227.7980
www.kpff.com
10021700078R17

STRUCTURAL REGISTERED PROFESSIONAL ENGINEER 15,773 OREGON JUL 21 1997 JERALD L. ABDIE
EXPIRES 12-31-19

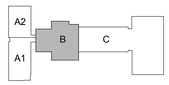

phase	BP2-PERMIT SET
date	6/15/2018
revisions	
BP2 - ADD 1	07/05/2018
BP2 - ADD 3	07/13/2018
project #	17007

MAT FOUNDATION PLAN - SECTOR B

S2.12

7/16/2018 1:06:44 PM
C:\1REVIT\10021700078_thong.lam@kpff.com.rvt

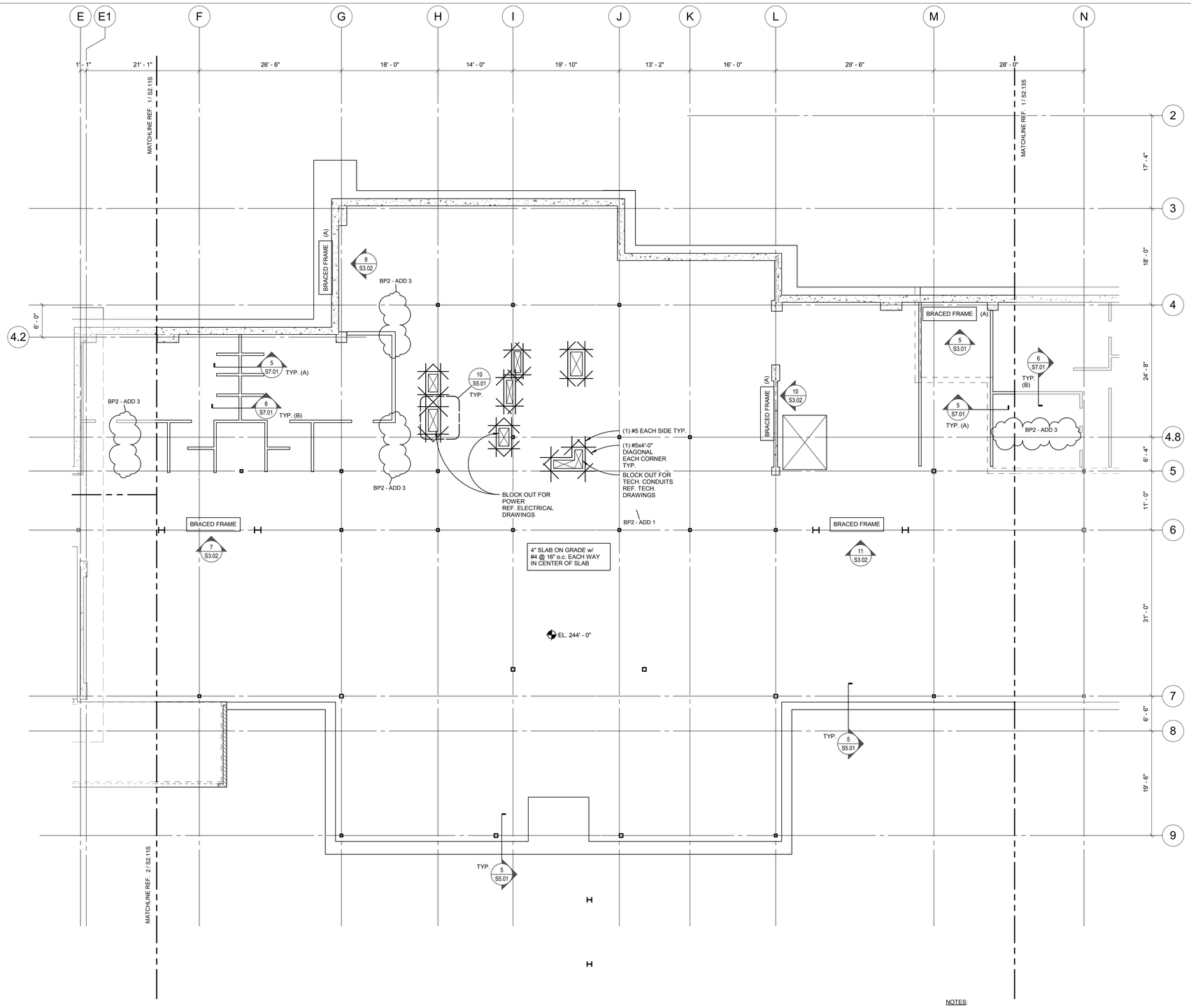

NOTES:

1. EL. XXX'-XX" INDICATES TOP OF SLAB ELEVATION.
2. INDICATES STEP IN ELEVATION REF. 15/S5.01 FOR STEP IN SLAB ON GRADE. OR 16/S5.01 FOR STEP IN MAT FOUNDATION.
3. INDICATES STEPPED FOOTING. REF. 13/S5.01 FOR STEP IN STRIP FOOTING.
4. REF. SHEET S5.01 AND S5.02 FOR TYPICAL CONCRETE DETAILS.
5. INDICATES 6" NON-STRUCTURAL CMU WALL. GROUT ALL REINFORCED CELLS. REF. GEN. STRUCT. NOTES FOR REINF.
6. INDICATES 8" CMU SOLID GROUTED SHEAR WALL. REF. GENERAL STRUCTURAL NOTES FOR WALL REINF. U.N.O.
7. INDICATES 10" CMU SOLID GROUTED SHEAR WALL. REF. GENERAL STRUCTURAL NOTES FOR WALL REINF. U.N.O.
8. INDICATES CONCRETE RETAINING WALL.
9. REF. ARCH. FOR SLAB EDGE DIMENSIONS.
10. REF. ARCH. FOR CMU WALL LOCATIONS AND OPENINGS.
11. REF. CIVIL AND LANDSCAPE DRAWINGS FOR SITE RETAINING WALLS.
12. REF. CIVIL AND LANDSCAPE DRAWINGS FOR EXTERIOR GRADE AND COORDINATE w/ FOUNDATION ELEVATIONS.
13. X / -XX.XX' INDICATES FOOTING TYPE REF. SCHEDULE. INDICATES TOP OF FOOTING ELEVATION.

1 SLAB ON GRADE PLAN - SECTOR B
1/8" = 1'-0"

7/16/2018 1:06:45 PM
C:\1REVIT\10021700078_thong.lam@kpff.com.rvt

BR|IC ARCHITECTURE, INC.
1233 NW NORTHRUP STREET, SUITE 100
PORTLAND, OR 97209 T 503 595 4900

New Middle School / High School
Seaside School District
1801 S. FRANKLIN STREET, SEASIDE, OREGON 97138
t: 503-738-5591

kpff
111 SW Fifth Ave., Suite 2500
Portland, OR 97204
O: 503.227.3251
F: 503.227.7980
www.kpff.com
10021700078R17

STRUCTURAL REGISTERED PROFESSIONAL ENGINEER 15,773 OREGON JUN. 21, 1993 JERALD L. ABDIE
EXPIRES 12-31-19

A2 A1 B C

phase	BP2-PERMIT SET
date	6/15/2018
revisions	
BP2 - ADD 1	07/05/2018
BP2 - ADD 3	07/13/2018
project #	17007

SLAB ON GRADE PLAN - SECTOR B

S2.12S

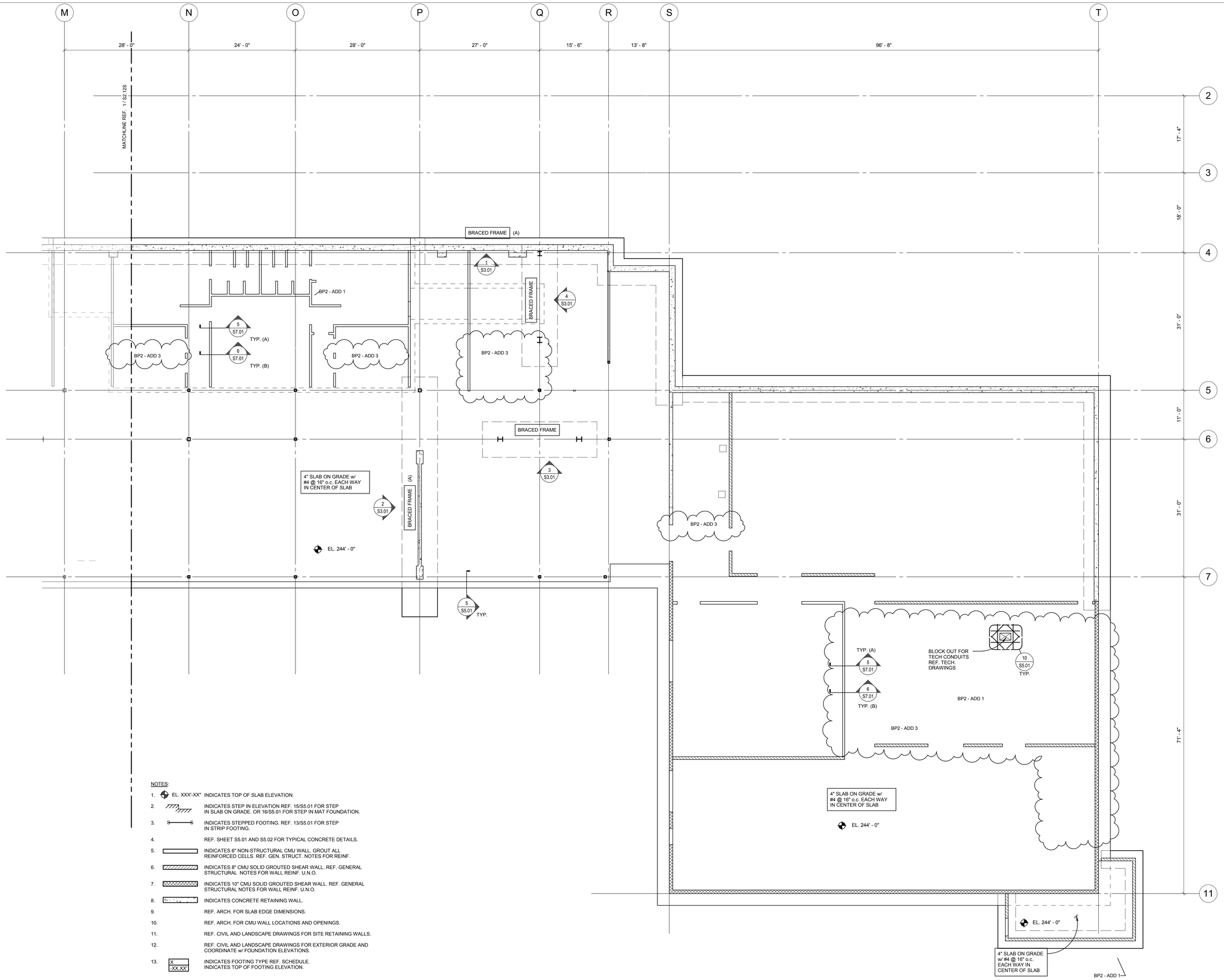

NOTES:

1. EL. XXX'-XX" INDICATES TOP OF SLAB ELEVATION.
2. INDICATES STEP IN ELEVATION REF. 15/S5.01 FOR STEP IN SLAB ON GRADE. OR 16/S5.01 FOR STEP IN MAT FOUNDATION.
3. INDICATES STEPPED FOOTING. REF. 13/S5.01 FOR STEP IN STRIP FOOTING.
4. REF. SHEET S5.01 AND S5.02 FOR TYPICAL CONCRETE DETAILS.
5. INDICATES 6" NON-STRUCTURAL CMU WALL. GROUT ALL REINFORCED CELLS. REF. GEN. STRUCT. NOTES FOR REINF.
6. INDICATES 8" CMU SOLID GROUTED SHEAR WALL. REF. GENERAL STRUCTURAL NOTES FOR WALL REINF. U.N.O.
7. INDICATES 10" CMU SOLID GROUTED SHEAR WALL. REF. GENERAL STRUCTURAL NOTES FOR WALL REINF. U.N.O.
8. INDICATES CONCRETE RETAINING WALL.
9. REF. ARCH. FOR SLAB EDGE DIMENSIONS.
10. REF. ARCH. FOR CMU WALL LOCATIONS AND OPENINGS.
11. REF. CIVIL AND LANDSCAPE DRAWINGS FOR SITE RETAINING WALLS.
12. REF. CIVIL AND LANDSCAPE DRAWINGS FOR EXTERIOR GRADE AND COORDINATE w/ FOUNDATION ELEVATIONS.
13. X / -XX.XX" INDICATES FOOTING TYPE REF. SCHEDULE. INDICATES TOP OF FOOTING ELEVATION.

1 SLAB ON GRADE PLAN - SECTOR C
1/8" = 1'-0"

7/16/2018 1:06:45 PM
C:\1REVIT\10021700078_thong.lam@kpff.com.rvt

BR|IC ARCHITECTURE, INC.
1233 NW NORTHRUP STREET, SUITE 100
PORTLAND, OR 97209 T 503 595 4900

New Middle School / High School
Seaside School District
1801 S. FRANKLIN STREET, SEASIDE, OREGON 97138
t: 503-738-5591

kpff
111 SW Fifth Ave., Suite 2500
Portland, OR 97204
O: 503.227.3251
F: 503.227.7980
www.kpff.com
10021700078R17

STRUCTURAL REGISTERED PROFESSIONAL ENGINEER 15,773 OREGON JUL 21, 1997 JERALD L. ABDIE
EXPIRES 12-31-19

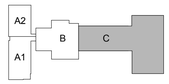

phase	BP2-PERMIT SET
date	6/15/2018
revisions	
BP2 - ADD 1	07/05/2018
BP2 - ADD 3	07/13/2018
project #	17007

SLAB ON GRADE PLAN - SECTOR C

S2.13S

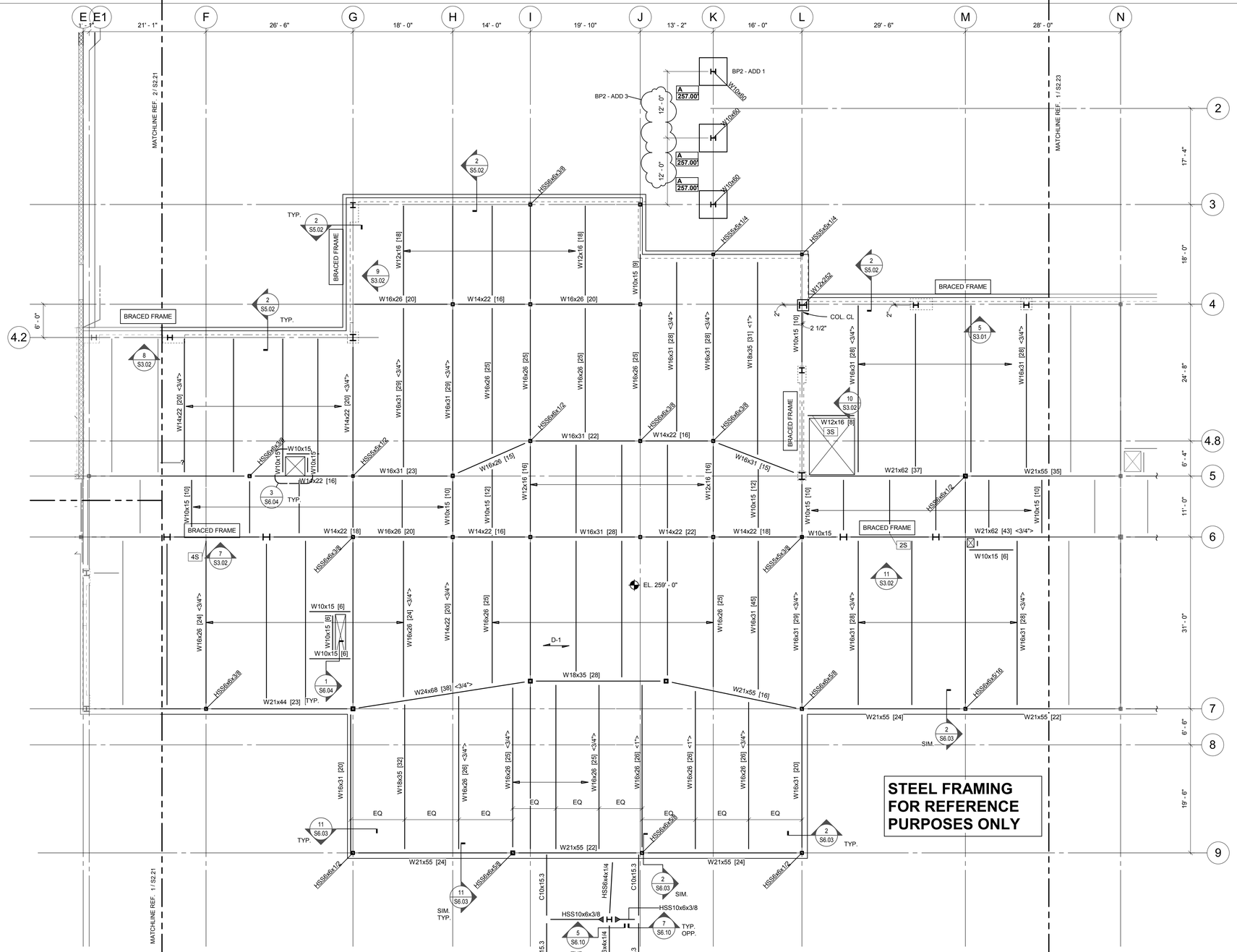

1 FRAMING PLAN LEVEL 2 - SECTOR B

1/8" = 1'-0"

SPREAD FOOTING SCHEDULE

MARK	SIZE LENGTHxWIDTH	"T"	REINFORCING
A	5'-0"x5'-0"	1'-6"	(5) #6 EACH WAY TOP & BOTTOM

NOTES:

1. REF. SHEET S6.01-S6.05 FOR TYPICAL STEEL DETAILS.
2. BEAMS ARE EQUALLY SPACED IN BAYS U.N.O.
3. BEAMS ARE CENTERED ON COLUMNS, WALLS AND/OR GRID LINES, U.N.O
4. X — INDICATES CONNECTION TYPE. REF. SHEETS S6.01-S6.02 FOR SCHEDULES AND CONNECTION DETAILS. REF. NOTE 6 WHERE CONNECTION TYPES ARE NOT SHOWN.
5. XC — INDICATED CONNECTION TYPE TO CONCRETE REF. 1/S6.02 FOR DETAIL.
6. PROVIDE THE FOLLOWING CONNECTION TYPES UNLESS NOTED OTHERWISE ON THE PLANS:

BEAM DESIGNATION	CONNECTION TYPE
W8	2D
W10	2
W12, W14	3
W16, W18	4
W21, W24	5
W27, W30	6
W33, W36	7

7. [XX] — INDICATES NUMBER OF 3/4"Øx4 1/2" HEADED STUDS EVENLY DISTRIBUTED ALONG BEAM LENGTH. REF. SHEET 7/S6.03 FOR TYPICAL COMPOSITE BEAM STUD SPACING DETAIL.
8. [X-X-X] — INDICATES NUMBER OF 3/4"Øx4 1/2" HEADED STUDS EVENLY DISTRIBUTED BETWEEN WF BEAMS ON WF GIRDERS. REF. SHEET 7/S6.03 FOR TYPICAL COMPOSITE BEAM STUD SPACING DETAIL.
9. <X"> — INDICATES UPWARD CAMBER AT MID SPAN.
10. D - X — INDICATES SPAN DIRECTION OF DECK. REF. SCHEDULE 1/S6.03 FOR DECK INFORMATION.
11. EL. XXX'-XX" — INDICATES TOP OF SLAB ELEVATION.
12. EL. XXX'-XX" — INDICATES BOTTOM OF DECK ELEVATION.
13. INDICATES MOMENT CONNECTION. REF. 2/S6.02 AND 3/S6.02 FOR DETAILS.
14. INDICATES SFRS COLLECTOR CONNECTION. REF. X/S6.0X FOR DETAILS.
15. INDICATES DIAGONAL BRACING AT WF BEAM. REF. 1/S6.05 AND 2/S6.05.
16. X — INDICATES BEAM PENETRATION. REF. SCHEDULE 7/S6.02.
17. REF. SHEET S6.04 FOR TYPICAL DECK REINFORCING AT OPENINGS.
18. (A) — INDICATES ABOVE.
19. (B) — INDICATES BELOW.
20. INDICATES COLUMN BELOW.
21. INDICATES OSHA TIE OFF. REF. ***SS013.09 - SS013.11*** FOR CONNECTION DETAILS.
22. XXX — INDICATES MEMBER PART OF SEISMIC FORCE RESISTING SYSTEM (SFRS). REF. GENERAL STRUCTURAL NOTES, SPECIFICATIONS, AND DETAILS FOR REQUIREMENTS.
23. X / -XX.XX" — INDICATES FOOTING TYPE REF. SCHEDULE. INDICATES TOP OF FOOTING ELEVATION.

BR|IC ARCHITECTURE, INC.
1233 NW NORTHRUP STREET, SUITE 100
PORTLAND, OR 97209 T 503.595.4900

New Middle School / High School
Seaside School District
1801 S. FRANKLIN STREET, SEASIDE, OREGON 97138
t: 503-738-5591

kpff
111 SW Fifth Ave., Suite 2500
Portland, OR 97204
O: 503.227.3251
F: 503.227.7980
www.kpff.com
10021700078R17

STAMPED REGISTERED PROFESSIONAL ENGINEER 15773 OREGON JUNE 20, 1997 GERALD L. ABDIE
EXPIRES 12-31-19

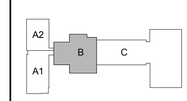

phase	BP2-PERMIT SET
date	6/15/2018
revisions	
BP2 - ADD 1	07/05/2018
BP2 - ADD 3	07/13/2018
project #	17007

FRAMING PLAN LEVEL 2 - SECTOR B

S2.22

7/16/2018 1:06:46 PM
C:\1REVIT\10021700078_thong.lam@kpff.com.rvt

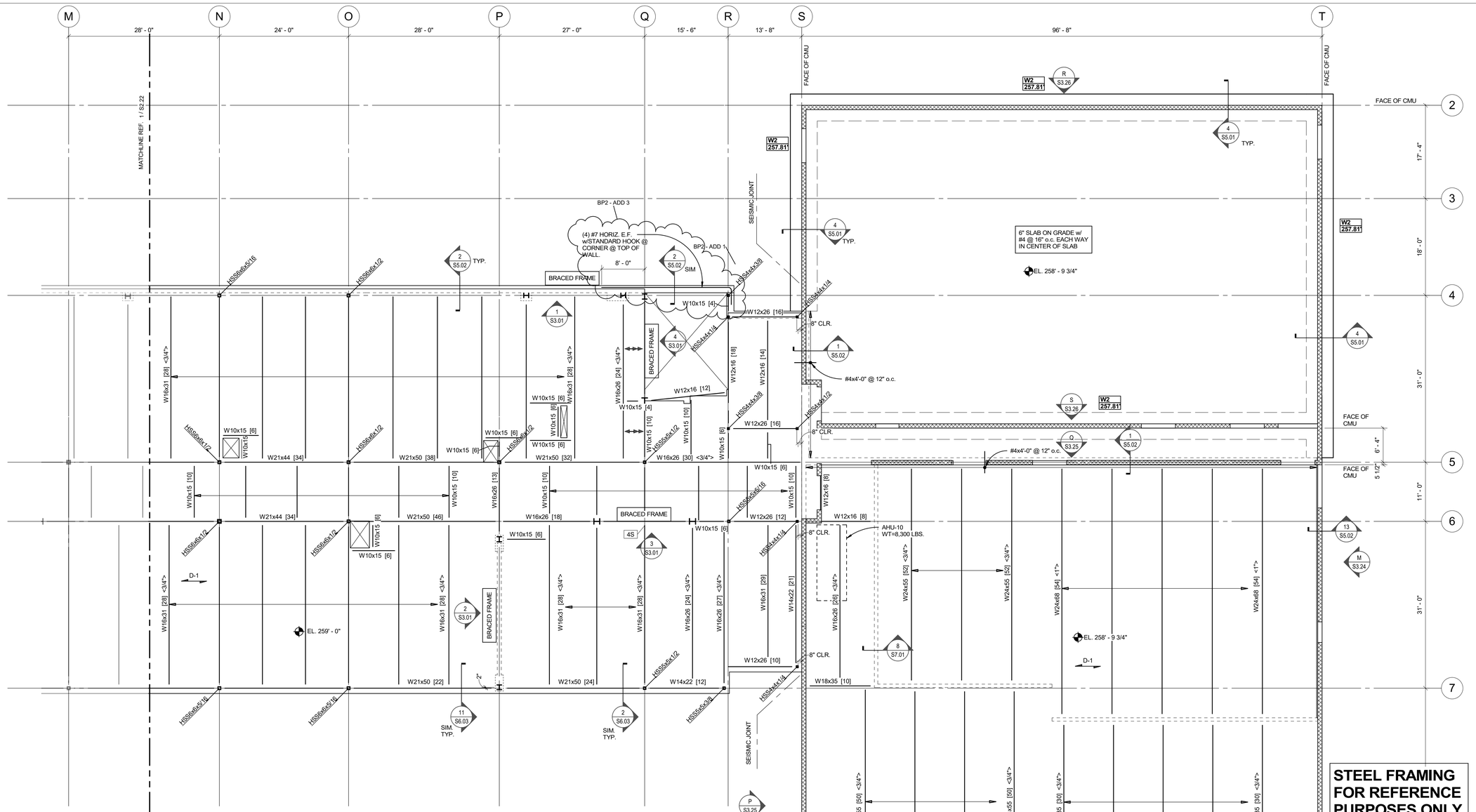

NOTES:

1. REF. SHEET S6.01-S6.05 FOR TYPICAL STEEL DETAILS.
2. BEAMS ARE EQUALLY SPACED IN BAYS U.N.O.
3. BEAMS ARE CENTERED ON COLUMNS, WALLS AND/OR GRID LINES, U.N.O
4. [X] INDICATES CONNECTION TYPE. REF. SHEETS S6.01-S6.02 FOR SCHEDULES AND CONNECTION DETAILS. REF. NOTE 6 WHERE CONNECTION TYPES ARE NOT SHOWN.
5. [XC] INDICATED CONNECTION TYPE TO CONCRETE REF. 1/S6.02 FOR DETAIL.
6. PROVIDE THE FOLLOWING CONNECTION TYPES UNLESS NOTED OTHERWISE ON THE PLANS:

BEAM DESIGNATION	CONNECTION TYPE
W8	2D
W10	2
W12, W14	3
W16, W18	4
W21, W24	5
W27, W30	6
W33, W36	7

7. [XX] INDICATES NUMBER OF 3/4"Øx4 1/2" HEADED STUDS EVENLY DISTRIBUTED ALONG BEAM LENGTH. REF. SHEET 7/S6.03 FOR TYPICAL COMPOSITE BEAM STUD SPACING DETAIL.
8. [X-X-X] INDICATES NUMBER OF 3/4"Øx4 1/2" HEADED STUDS EVENLY DISTRIBUTED BETWEEN WF BEAMS ON WF GIRDERS. REF. SHEET 7/S6.03 FOR TYPICAL COMPOSITE BEAM STUD SPACING DETAIL.
9. <X"> INDICATES UPWARD CAMBER AT MID SPAN.
10. D - X INDICATES SPAN DIRECTION OF DECK. REF. SCHEDULE 1/S6.03 FOR DECK INFORMATION.
11. EL. XXX'-XX" INDICATES TOP OF SLAB ELEVATION.
12. EL. XXX'-XX" INDICATES BOTTOM OF DECK ELEVATION.
13. INDICATES MOMENT CONNECTION. REF. 2/S6.02 AND 3/S6.02 FOR DETAILS.
14. INDICATES SFRS COLLECTOR CONNECTION. REF. X/S6.0X FOR DETAILS.
15. INDICATES DIAGONAL BRACING AT WF BEAM. REF. 1/S6.05 AND 2/S6.05.
16. X INDICATES BEAM PENETRATION. REF. SCHEDULE 7/S6.02.
17. REF. SHEET S6.04 FOR TYPICAL DECK REINFORCING AT OPENINGS.
18. (A) INDICATES ABOVE.
19. (B) INDICATES BELOW.
20. INDICATES COLUMN BELOW.
21. INDICATES OSHA TIE OFF. REF. ***SS013.09 - SS013.11*** FOR CONNECTION DETAILS.
22. XXX INDICATES MEMBER PART OF SEISMIC FORCE RESISTING SYSTEM (SFRS). REF. GENERAL STRUCTURAL NOTES, SPECIFICATIONS, AND DETAILS FOR REQUIREMENTS.
23. X -XX.XX' INDICATES FOOTING TYPE REF. SCHEDULE. INDICATES TOP OF FOOTING ELEVATION.

WALL FOOTING SCHEDULE

MARK	WIDTH	THICKNESS	LONGITUDINAL REINFORCING	TRANSVERSE REINFORCING
W1	2'-0"	1'-0"	(3) #5	#4 @ 9" o.c.
W2	5'-0"	1'-6"	(5) #6	#5 @ 9" o.c.

1 FRAMING PLAN LEVEL 2 - SECTOR C
1/8" = 1'-0"

BR|IC ARCHITECTURE, INC.
1233 NW NORTHRUP STREET, SUITE 100
PORTLAND, OR 97209 T 503.595.4900

New Middle School / High School
Seaside School District
1801 S. FRANKLIN STREET, SEASIDE, OREGON 97138
t: 503-738-5591

kpff
111 SW Fifth Ave., Suite 2500
Portland, OR 97204
O: 503.227.3251
F: 503.227.7980
www.kpff.com
100217000788R17

STRUCTURAL REGISTERED PROFESSIONAL ENGINEER 15773 OREGON JAN. 21, 1994 JERALD L. ADUTE
EXPIRES 12-31-19

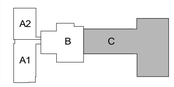

phase	BP2-PERMIT SET
date	6/15/2018
revisions	
BP2 - ADD 1	07/05/2018
BP2 - ADD 3	07/13/2018
project #	17007

FRAMING PLAN LEVEL 2 - SECTOR C

S2.23

7/13/2018 3:15:05 PM
C:\REVIT\100217000788_Samantha.Puentes@kpff.com.rvt

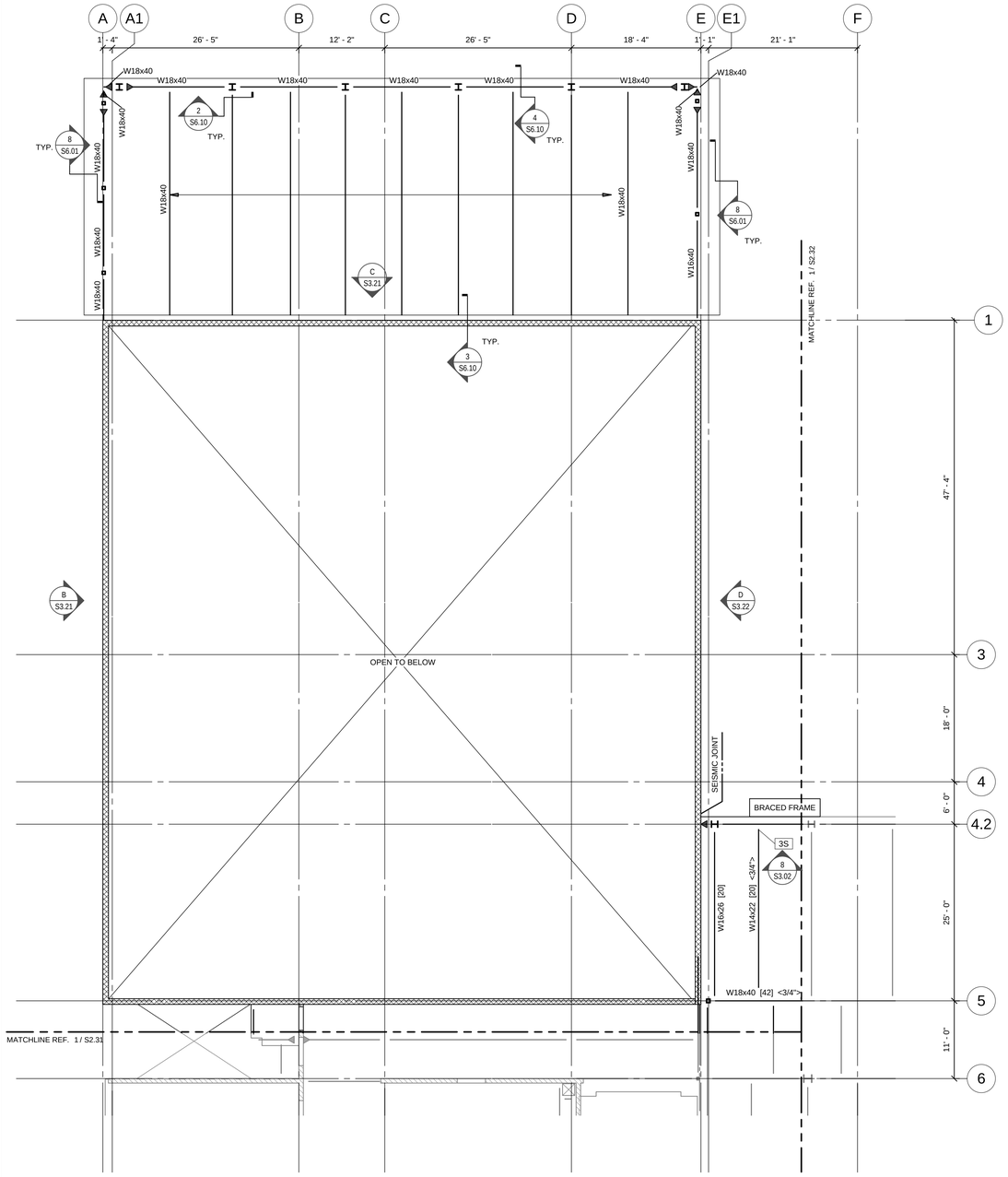

2 FRAMING PLAN LEVEL 3 - SECTOR A2
1/8" = 1'-0"

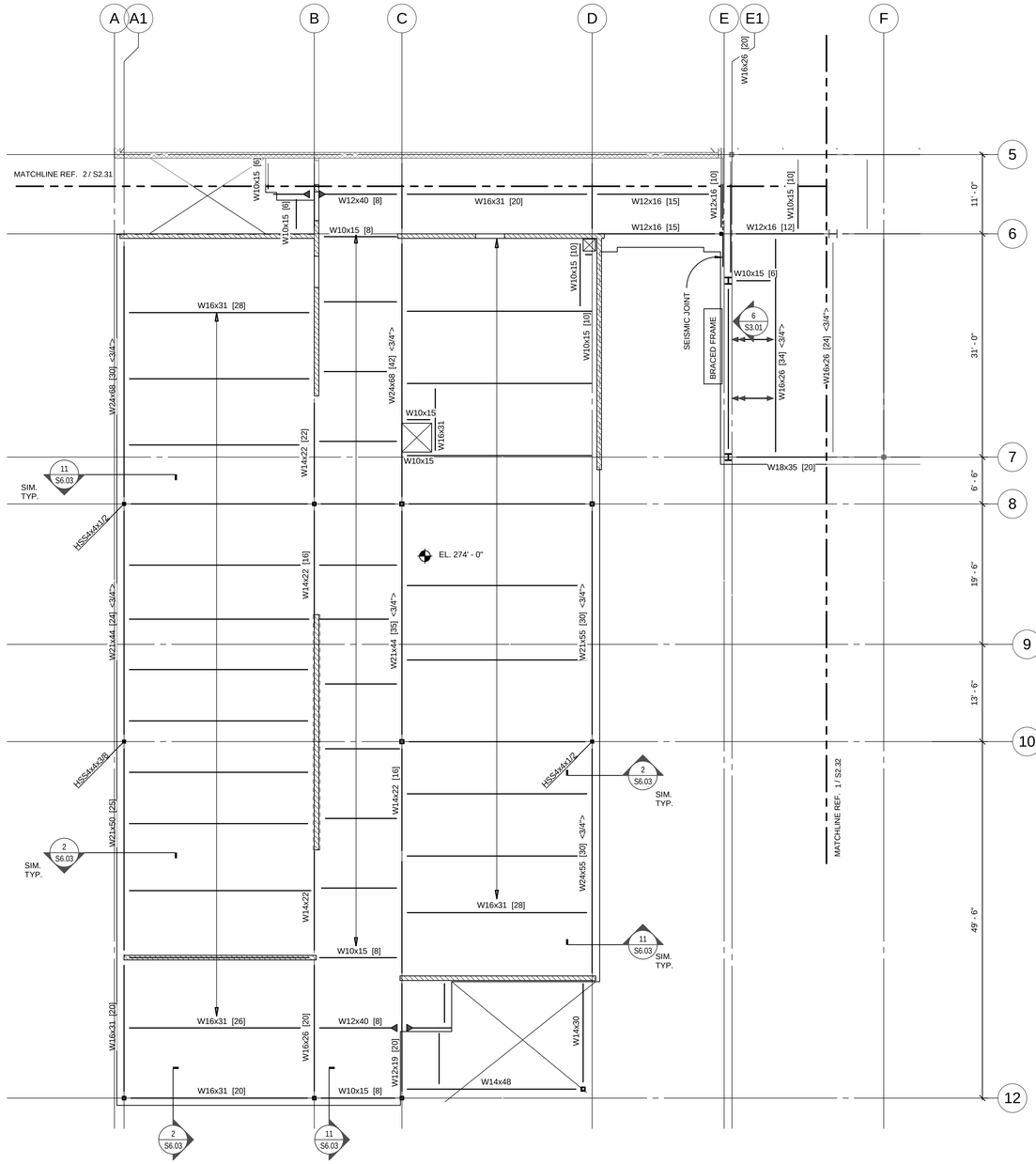

1 FRAMING PLAN LEVEL 3 - SECTOR A1
1/8" = 1'-0"

NOTES:

1. REF. SHEET S6.01-S6.05 FOR TYPICAL STEEL DETAILS.
2. BEAMS ARE EQUALLY SPACED IN BAYS U.N.O.
3. BEAMS ARE CENTERED ON COLUMNS, WALLS AND/OR GRID LINES, U.N.O
4. [X] INDICATES CONNECTION TYPE. REF. SHEETS S6.01-S6.02 FOR SCHEDULES AND CONNECTION DETAILS. REF. NOTE 6 WHERE CONNECTION TYPES ARE NOT SHOWN.
5. [XC] INDICATED CONNECTION TYPE TO CONCRETE REF. 1/S6.02 FOR DETAIL.
6. PROVIDE THE FOLLOWING CONNECTION TYPES UNLESS NOTED OTHERWISE ON THE PLANS:

BEAM DESIGNATION	CONNECTION TYPE
W8	2D
W10	2
W12, W14	3
W16, W18	4
W21, W24	5
W27, W30	6
W33, W36	7

7. [XX] INDICATES NUMBER OF 3/4"Øx4 1/2" HEADED STUDS EVENLY DISTRIBUTED ALONG BEAM LENGTH. REF. SHEET 7/S6.03 FOR TYPICAL COMPOSITE BEAM STUD SPACING DETAIL.
8. [X-X-X] INDICATES NUMBER OF 3/4"Øx4 1/2" HEADED STUDS EVENLY DISTRIBUTED BETWEEN WF BEAMS ON WF GIRDERS. REF. SHEET 7/S6.03 FOR TYPICAL COMPOSITE BEAM STUD SPACING DETAIL.
9. <X"> INDICATES UPWARD CAMBER AT MID SPAN.
10. D - X INDICATES SPAN DIRECTION OF DECK. REF. SCHEDULE 1/S6.03 FOR DECK INFORMATION.
11. EL. XXX'-XX" INDICATES TOP OF SLAB ELEVATION.
12. EL. XXX'-XX" INDICATES BOTTOM OF DECK ELEVATION.
13. INDICATES MOMENT CONNECTION. REF. 2/S6.02 AND 3/S6.02 FOR DETAILS.
14. INDICATES SFRS COLLECTOR CONNECTION. REF. X/S6.0X FOR DETAILS.
15. INDICATES DIAGONAL BRACING AT WF BEAM. REF. 1/S6.05 AND 2/S6.05.
16. X INDICATES BEAM PENETRATION. REF. SCHEDULE 7/S6.02.
17. REF. SHEET S6.04 FOR TYPICAL DECK REINFORCING AT OPENINGS.
18. (A) INDICATES ABOVE.
19. (B) INDICATES BELOW.
20. INDICATES COLUMN BELOW.
21. INDICATES OSHA TIE OFF. REF. ***SS013.09 - SS013.11*** FOR CONNECTION DETAILS.
22. XXX INDICATES MEMBER PART OF SEISMIC FORCE RESISTING SYSTEM (SFRS). REF. GENERAL STRUCTURAL NOTES, SPECIFICATIONS, AND DETAILS FOR REQUIREMENTS.
23. X / -XX.XX INDICATES FOOTING TYPE REF. SCHEDULE. INDICATES TOP OF FOOTING ELEVATION.

BR|IC ARCHITECTURE, INC.
1233 NW NORTHRUP STREET, SUITE 100
PORTLAND, OR 97209 T 503.595.4900

New Middle School / High School
Seaside School District
1801 S. FRANKLIN STREET, SEASIDE, OREGON 97138
t: 503-738-5591

kpff
111 SW Fifth Ave., Suite 2500
Portland, OR 97204
O: 503.227.3251
F: 503.227.7980
www.kpff.com
10021700078R17

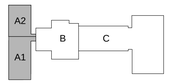

phase	BP2-PERMIT SET
date	6/15/2018
revisions	
project #	17007

FRAMING PLAN LEVEL 3 - SECTOR A

S2.31

6/14/2018 12:12:56 PM
C:\1REVIT\100217000078_Courtney.Bradshaw@kpff.com.rvt

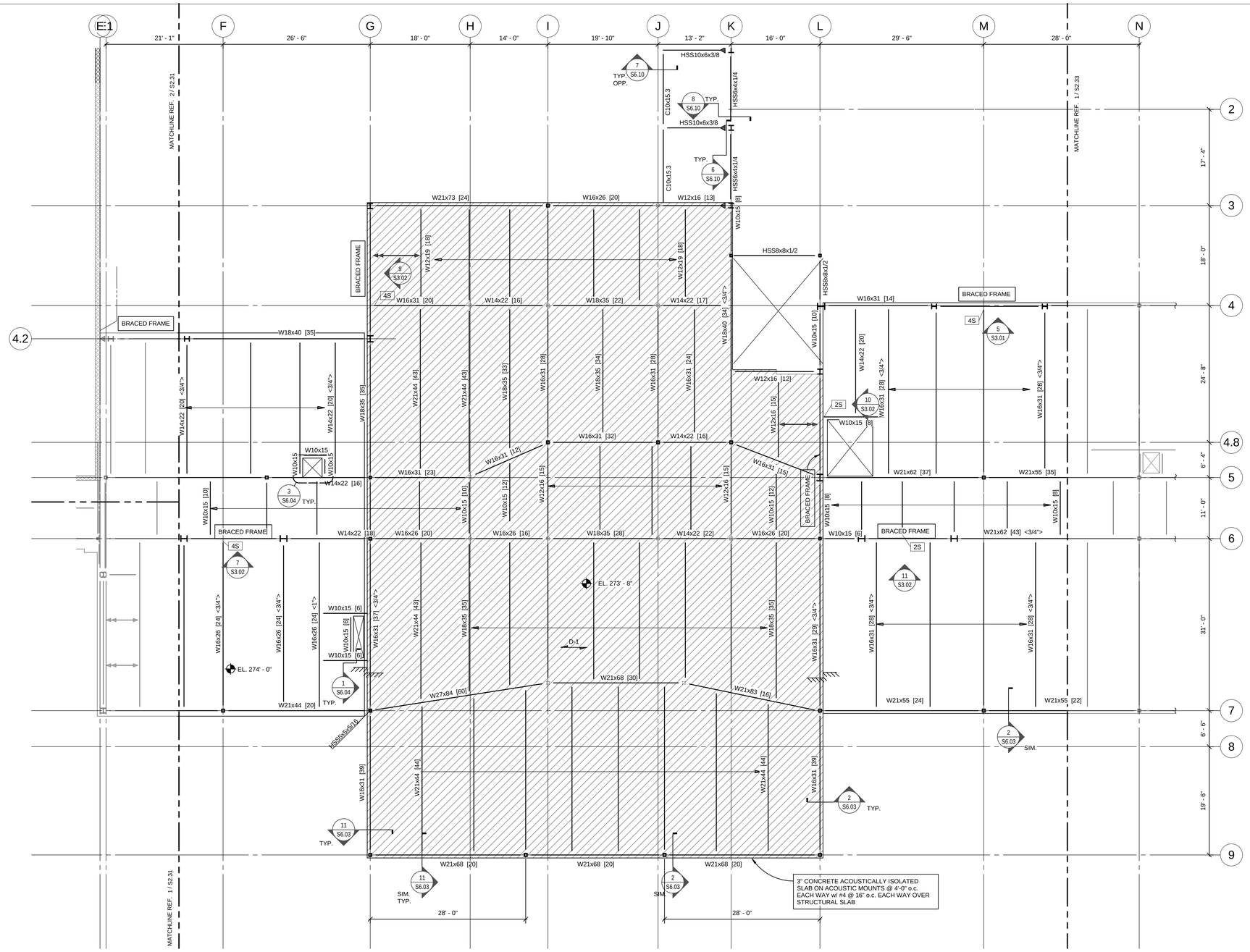

1 FRAMING PLAN LEVEL 3 - SECTOR B

1/8" = 1'-0"

NOTES:

1. REF. SHEET S6.01-S6.05 FOR TYPICAL STEEL DETAILS.
2. BEAMS ARE EQUALLY SPACED IN BAYS U.N.O.
3. BEAMS ARE CENTERED ON COLUMNS, WALLS AND/OR GRID LINES, U.N.O
4. [X] INDICATES CONNECTION TYPE. REF. SHEETS S6.01-S6.02 FOR SCHEDULES AND CONNECTION DETAILS. REF. NOTE 6 WHERE CONNECTION TYPES ARE NOT SHOWN.
5. [XC] INDICATED CONNECTION TYPE TO CONCRETE REF. 1/S6.02 FOR DETAIL.
6. PROVIDE THE FOLLOWING CONNECTION TYPES UNLESS NOTED OTHERWISE ON THE PLANS:

BEAM DESIGNATION	CONNECTION TYPE
W8	2D
W10	2
W12, W14	3
W16, W18	4
W21, W24	5
W27, W30	6
W33, W36	7

7. [XX] INDICATES NUMBER OF 3/4"Øx4 1/2" HEADED STUDS EVENLY DISTRIBUTED ALONG BEAM LENGTH. REF. SHEET 7/S6.03 FOR TYPICAL COMPOSITE BEAM STUD SPACING DETAIL.
8. [X-X-X] INDICATES NUMBER OF 3/4"Øx4 1/2" HEADED STUDS EVENLY DISTRIBUTED BETWEEN WF BEAMS ON WF GIRDERS. REF. SHEET 7/S6.03 FOR TYPICAL COMPOSITE BEAM STUD SPACING DETAIL.
9. <X"> INDICATES UPWARD CAMBER AT MID SPAN.
10. D - X INDICATES SPAN DIRECTION OF DECK. REF. SCHEDULE 1/S6.03 FOR DECK INFORMATION.
11. EL. XXX'-XX" INDICATES TOP OF SLAB ELEVATION.
12. EL. XXX'-XX" INDICATES BOTTOM OF DECK ELEVATION.
13. INDICATES MOMENT CONNECTION. REF. 2/S6.02 AND 3/S6.02 FOR DETAILS.
14. INDICATES SFRS COLLECTOR CONNECTION. REF. X/S6.0X FOR DETAILS.
15. INDICATES DIAGONAL BRACING AT WF BEAM. REF. 1/S6.05 AND 2/S6.05.
16. X INDICATES BEAM PENETRATION. REF. SCHEDULE 7/S6.02.
17. REF. SHEET S6.04 FOR TYPICAL DECK REINFORCING AT OPENINGS.
18. (A) INDICATES ABOVE.
19. (B) INDICATES BELOW.
20. INDICATES COLUMN BELOW.
21. INDICATES OSHA TIE OFF. REF. ***SS013.09 - SS013.11*** FOR CONNECTION DETAILS.
22. XXX INDICATES MEMBER PART OF SEISMIC FORCE RESISTING SYSTEM (SFRS). REF. GENERAL STRUCTURAL NOTES, SPECIFICATIONS, AND DETAILS FOR REQUIREMENTS.
23. X / XX.XX INDICATES FOOTING TYPE REF. SCHEDULE. INDICATES TOP OF FOOTING ELEVATION.

BR|IC ARCHITECTURE, INC.
1233 NW NORTHRUP STREET, SUITE 100
PORTLAND, OR 97209 T 503.595.4900

New Middle School / High School
Seaside School District
1801 S. FRANKLIN STREET, SEASIDE, OREGON 97138
t: 503-738-5591

kpff
111 SW Fifth Ave., Suite 2500
Portland, OR 97204
O: 503.227.3251
F: 503.227.7980
www.kpff.com
10021700078R17

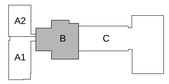

phase	BP2-PERMIT SET
date	6/15/2018
revisions	
project #	17007

FRAMING PLAN LEVEL 3 - SECTOR B

S2.32

6/14/2018 12:12:58 PM
C:\1REVIT\100217000?8_Courtney.Bradshaw@kpff.com.rvt

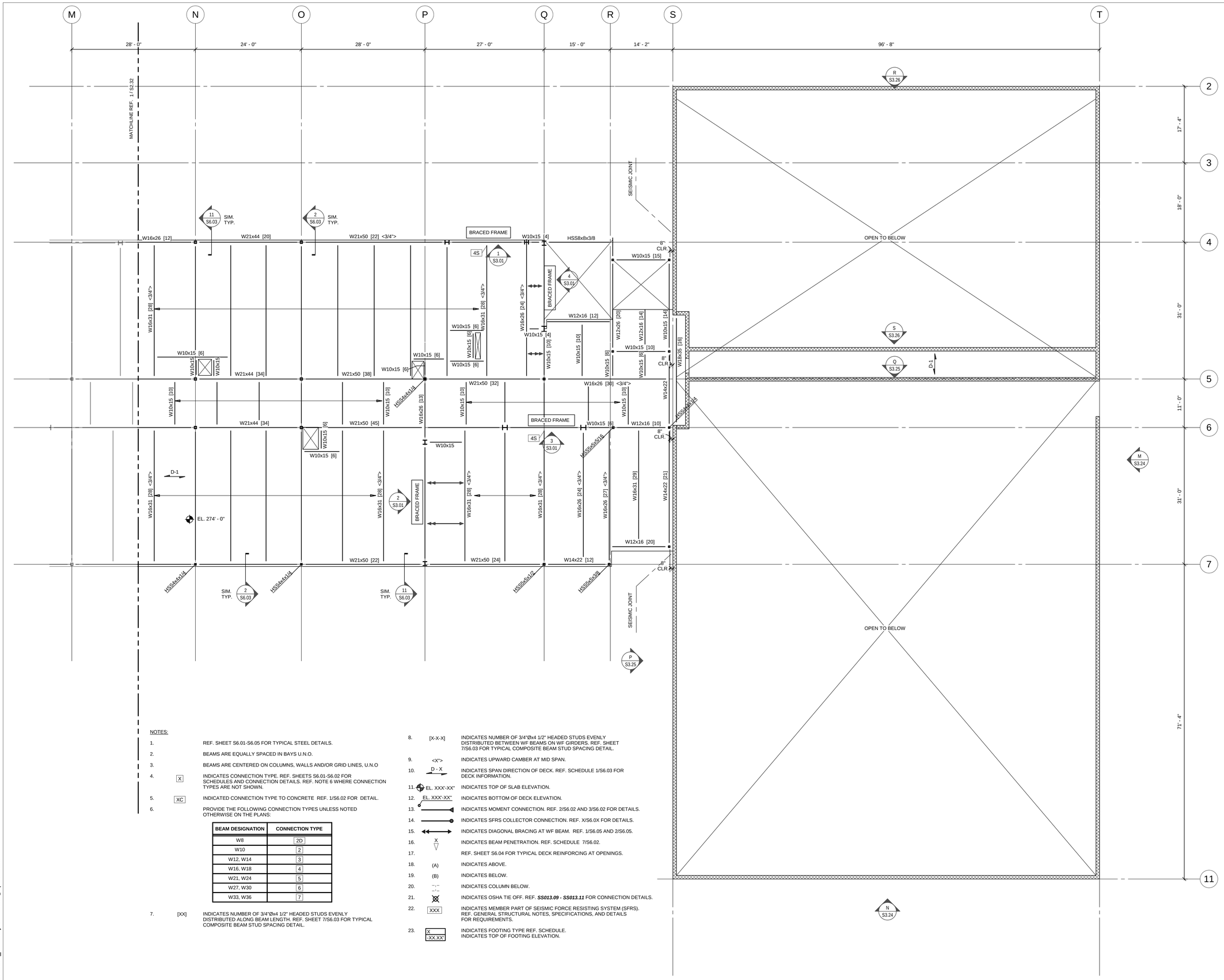

NOTES:

1. REF. SHEET S6.01-S6.05 FOR TYPICAL STEEL DETAILS.
2. BEAMS ARE EQUALLY SPACED IN BAYS U.N.O.
3. BEAMS ARE CENTERED ON COLUMNS, WALLS AND/OR GRID LINES, U.N.O
4. [X] INDICATES CONNECTION TYPE. REF. SHEETS S6.01-S6.02 FOR SCHEDULES AND CONNECTION DETAILS. REF. NOTE 6 WHERE CONNECTION TYPES ARE NOT SHOWN.
5. [XC] INDICATED CONNECTION TYPE TO CONCRETE REF. 1/S6.02 FOR DETAIL.
6. PROVIDE THE FOLLOWING CONNECTION TYPES UNLESS NOTED OTHERWISE ON THE PLANS:

BEAM DESIGNATION	CONNECTION TYPE
W8	2D
W10	2
W12, W14	3
W16, W18	4
W21, W24	5
W27, W30	6
W33, W36	7

7. [XX] INDICATES NUMBER OF 3/4"Øx4 1/2" HEADED STUDS EVENLY DISTRIBUTED ALONG BEAM LENGTH. REF. SHEET 7/S6.03 FOR TYPICAL COMPOSITE BEAM STUD SPACING DETAIL.
8. [X-X-X] INDICATES NUMBER OF 3/4"Øx4 1/2" HEADED STUDS EVENLY DISTRIBUTED BETWEEN WF BEAMS ON WF GIRDERS. REF. SHEET 7/S6.03 FOR TYPICAL COMPOSITE BEAM STUD SPACING DETAIL.
9. <X"> INDICATES UPWARD CAMBER AT MID SPAN.
10. D - X INDICATES SPAN DIRECTION OF DECK. REF. SCHEDULE 1/S6.03 FOR DECK INFORMATION.
11. EL. XXX'-XX" INDICATES TOP OF SLAB ELEVATION.
12. EL. XXX'-XX" INDICATES BOTTOM OF DECK ELEVATION.
13. INDICATES MOMENT CONNECTION. REF. 2/S6.02 AND 3/S6.02 FOR DETAILS.
14. INDICATES SFRS COLLECTOR CONNECTION. REF. X/S6.0X FOR DETAILS.
15. INDICATES DIAGONAL BRACING AT WF BEAM. REF. 1/S6.05 AND 2/S6.05.
16. X INDICATES BEAM PENETRATION. REF. SCHEDULE 7/S6.02.
17. REF. SHEET S6.04 FOR TYPICAL DECK REINFORCING AT OPENINGS.
18. (A) INDICATES ABOVE.
19. (B) INDICATES BELOW.
20. INDICATES COLUMN BELOW.
21. INDICATES OSHA TIE OFF. REF. ***SS013.09 - SS013.11*** FOR CONNECTION DETAILS.
22. XXX INDICATES MEMBER PART OF SEISMIC FORCE RESISTING SYSTEM (SFRS). REF. GENERAL STRUCTURAL NOTES, SPECIFICATIONS, AND DETAILS FOR REQUIREMENTS.
23. X / -XX.XX' INDICATES FOOTING TYPE REF. SCHEDULE. INDICATES TOP OF FOOTING ELEVATION.

1 FRAMING PLAN LEVEL 3 - SECTOR C
1/8" = 1'-0"

6/14/2018 12:13:00 PM
C:\LREVIT\100217\00078_Courtney.Bradshaw@kpff.com.rvt

BR|IC ARCHITECTURE, INC.
1233 NW NORTHRUP STREET, SUITE 100
PORTLAND, OR 97209 T 503.595.4900

New Middle School / High School
Seaside School District
1801 S. FRANKLIN STREET, SEASIDE, OREGON 97138
t: 503-738-5591

kpff
111 SW Fifth Ave., Suite 2500
Portland, OR 97204
O: 503.227.3251
F: 503.227.7980
www.kpff.com
10021700078R17

A2 A1 B C

phase	BP2-PERMIT SET
date	6/15/2018
revisions	
project #	17007

FRAMING PLAN LEVEL 3 - SECTOR C

S2.33

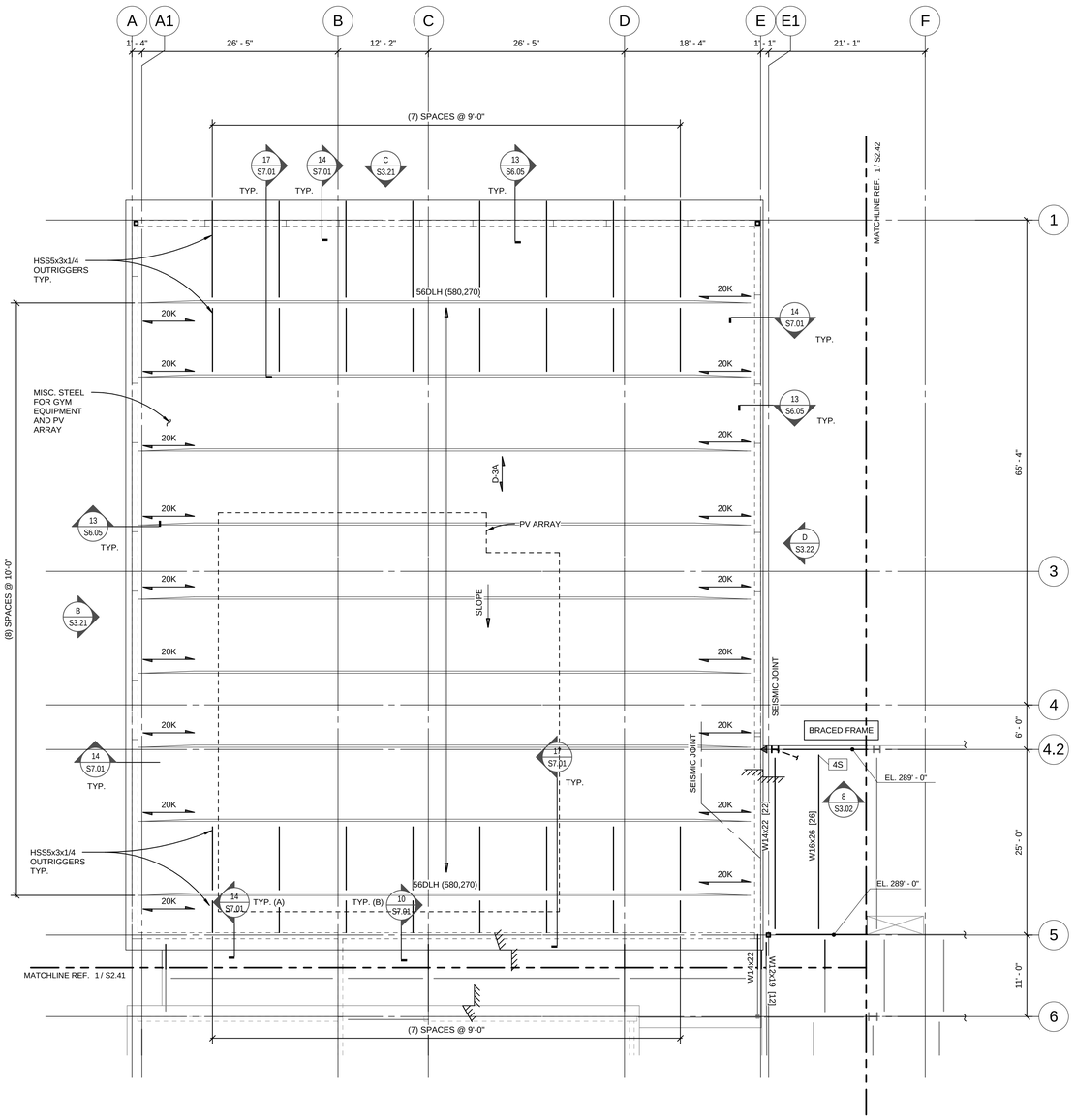

2 FRAMING PLAN ROOF - SECTOR A2

1/8" = 1'-0"

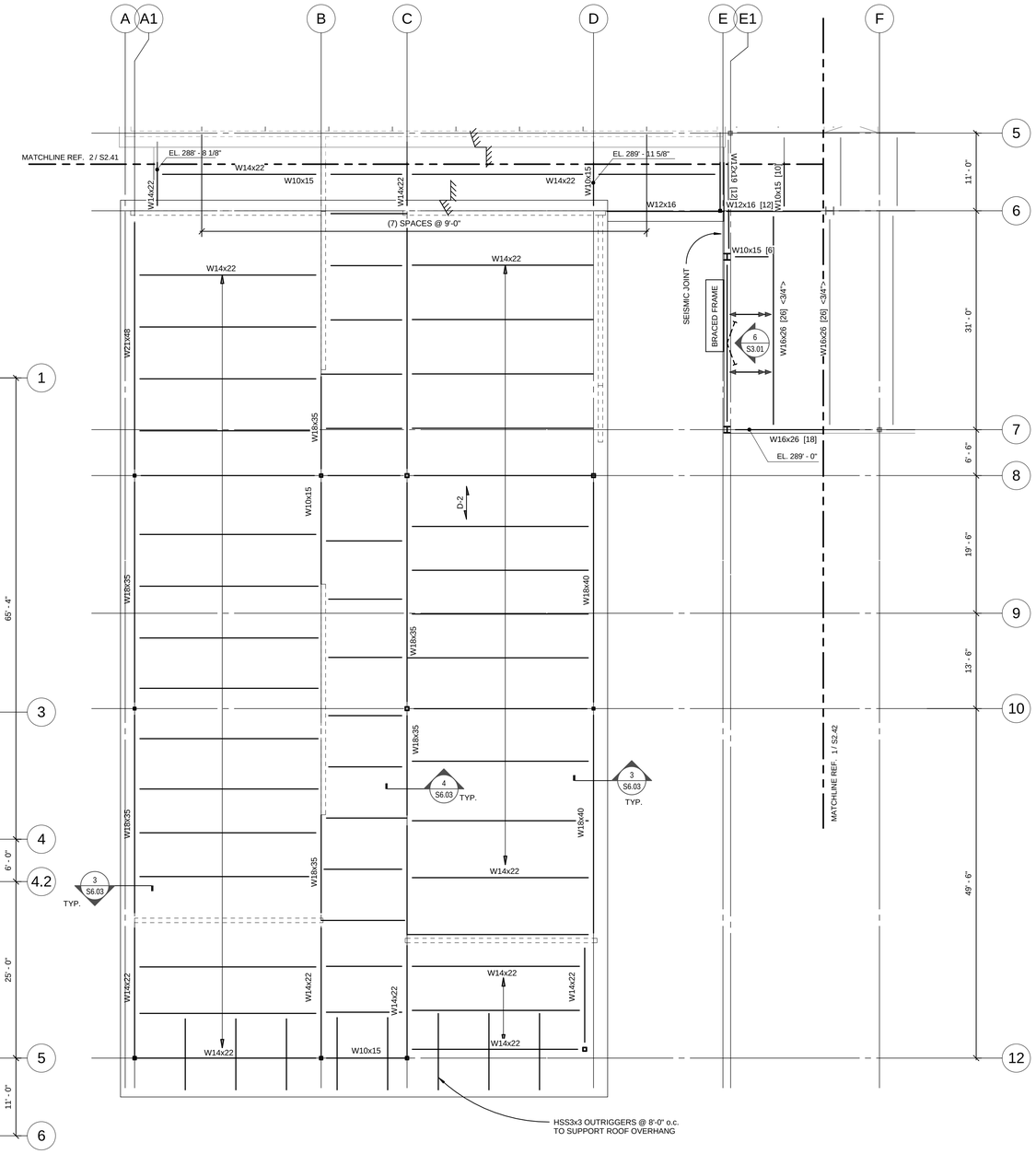

1 FRAMING PLAN ROOF - SECTOR A1

1/8" = 1'-0"

NOTES:

1. REF. SHEET S6.01-S6.05 FOR TYPICAL STEEL DETAILS.
2. BEAMS ARE EQUALLY SPACED IN BAYS U.N.O.
3. BEAMS ARE CENTERED ON COLUMNS, WALLS AND/OR GRID LINES, U.N.O
4. [X] INDICATES CONNECTION TYPE. REF. SHEETS S6.01-S6.02 FOR SCHEDULES AND CONNECTION DETAILS. REF. NOTE 6 WHERE CONNECTION TYPES ARE NOT SHOWN.
5. [XC] INDICATED CONNECTION TYPE TO CONCRETE REF. 1/S6.02 FOR DETAIL.
6. PROVIDE THE FOLLOWING CONNECTION TYPES UNLESS NOTED OTHERWISE ON THE PLANS:

BEAM DESIGNATION	CONNECTION TYPE
W8	2D
W10	2
W12, W14	3
W16, W18	4
W21, W24	5
W27, W30	6
W33, W36	7

7. [XX] INDICATES NUMBER OF 3/4"Øx4 1/2" HEADED STUDS EVENLY DISTRIBUTED ALONG BEAM LENGTH. REF. SHEET 7/S6.03 FOR TYPICAL COMPOSITE BEAM STUD SPACING DETAIL.
8. [X-X-X] INDICATES NUMBER OF 3/4"Øx4 1/2" HEADED STUDS EVENLY DISTRIBUTED BETWEEN WF BEAMS ON WF GIRDERS. REF. SHEET 7/S6.03 FOR TYPICAL COMPOSITE BEAM STUD SPACING DETAIL.
9. <X"> INDICATES UPWARD CAMBER AT MID SPAN.
10. D - X INDICATES SPAN DIRECTION OF DECK. REF. SCHEDULE 1/S6.03 FOR DECK INFORMATION.
11. EL. XXX'-XX" INDICATES TOP OF SLAB ELEVATION.
12. EL. XXX'-XX" INDICATES BOTTOM OF DECK ELEVATION.
13. INDICATES MOMENT CONNECTION. REF. 2/S6.02 AND 3/S6.02 FOR DETAILS.
14. INDICATES SFRS COLLECTOR CONNECTION. REF. X/S6.0X FOR DETAILS.
15. INDICATES DIAGONAL BRACING AT WF BEAM. REF. 1/S6.05 AND 2/S6.05.
16. X INDICATES BEAM PENETRATION. REF. SCHEDULE 7/S6.02.
17. REF. SHEET S6.04 FOR TYPICAL DECK REINFORCING AT OPENINGS.
18. (A) INDICATES ABOVE.
19. (B) INDICATES BELOW.
20. INDICATES COLUMN BELOW.
21. INDICATES OSHA TIE OFF. REF. ***SS013.09 - SS013.11*** FOR CONNECTION DETAILS.
22. XXX INDICATES MEMBER PART OF SEISMIC FORCE RESISTING SYSTEM (SFRS). REF. GENERAL STRUCTURAL NOTES, SPECIFICATIONS, AND DETAILS FOR REQUIREMENTS.
23. X / XX.XX INDICATES FOOTING TYPE REF. SCHEDULE. INDICATES TOP OF FOOTING ELEVATION.

BR|IC ARCHITECTURE, INC.
1233 NW NORTHRUP STREET, SUITE 100
PORTLAND, OR 97209 T 503.595.4900

New Middle School / High School
Seaside School District
1801 S. FRANKLIN STREET, SEASIDE, OREGON 97138
t: 503-738-5591

kpff
111 SW Fifth Ave., Suite 2500
Portland, OR 97204
O: 503.227.3251
F: 503.227.7980
www.kpff.com
10021700078R17

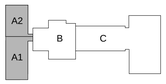

phase	BP2-PERMIT SET
date	6/15/2018
revisions	
project #	17007

FRAMING PLAN ROOF - SECTOR A

S2.41

6/14/2018 12:13:03 PM
C:\1REVIT\10021700078_Courtney.Bradshaw@kpff.com.rvt

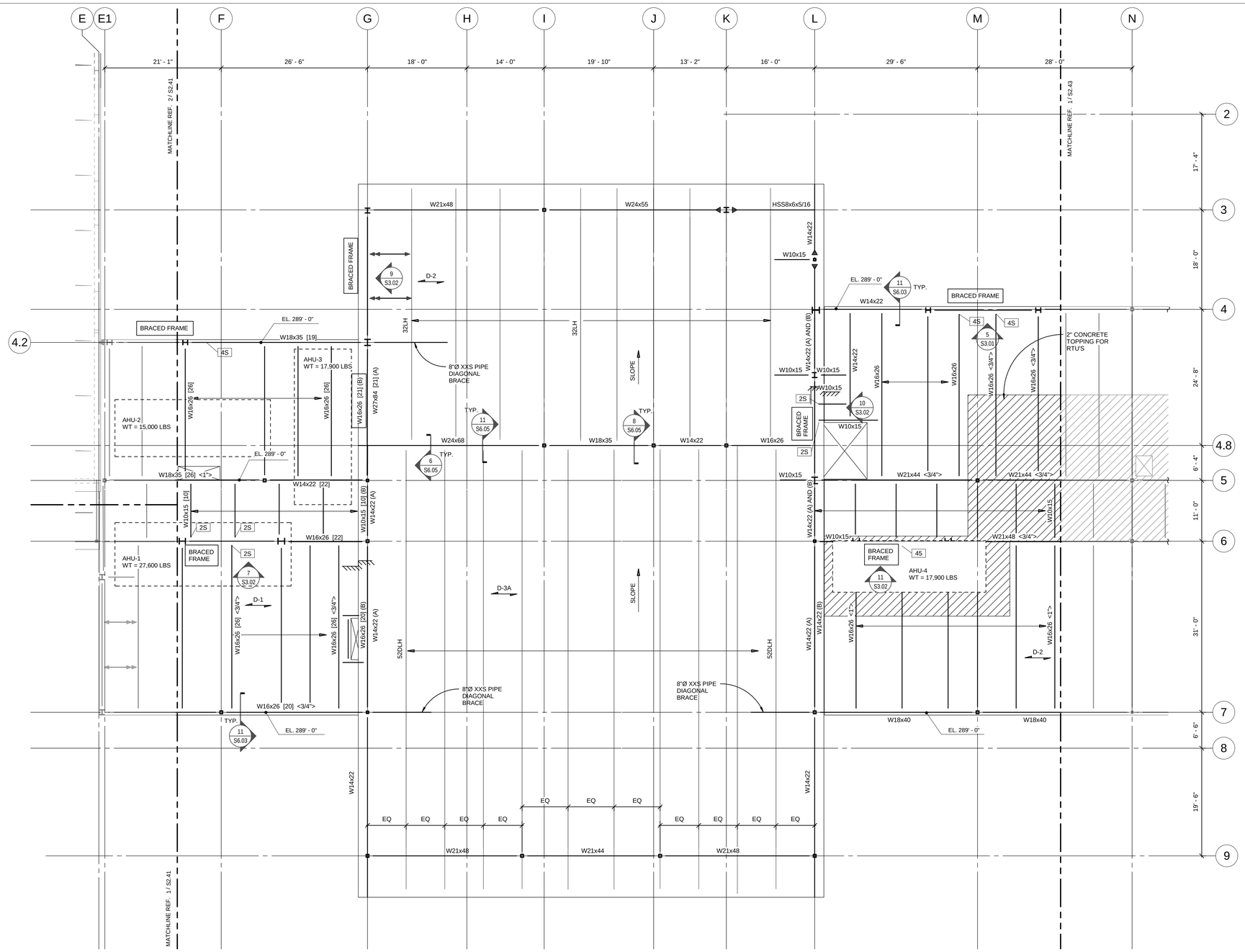

1 FRAMING PLAN ROOF - SECTOR B

1/8" = 1'-0"

NOTES:

1. REF. SHEET S6.01-S6.05 FOR TYPICAL STEEL DETAILS.
2. BEAMS ARE EQUALLY SPACED IN BAYS U.N.O.
3. BEAMS ARE CENTERED ON COLUMNS, WALLS AND/OR GRID LINES, U.N.O
4. [X] INDICATES CONNECTION TYPE. REF. SHEETS S6.01-S6.02 FOR SCHEDULES AND CONNECTION DETAILS. REF. NOTE 6 WHERE CONNECTION TYPES ARE NOT SHOWN.
5. [XC] INDICATED CONNECTION TYPE TO CONCRETE REF. 1/S6.02 FOR DETAIL.
6. PROVIDE THE FOLLOWING CONNECTION TYPES UNLESS NOTED OTHERWISE ON THE PLANS:

BEAM DESIGNATION	CONNECTION TYPE
W8	2D
W10	2
W12, W14	3
W16, W18	4
W21, W24	5
W27, W30	6
W33, W36	7

7. [XX] INDICATES NUMBER OF 3/4"Øx4 1/2" HEADED STUDS EVENLY DISTRIBUTED ALONG BEAM LENGTH. REF. SHEET 7/S6.03 FOR TYPICAL COMPOSITE BEAM STUD SPACING DETAIL.
8. [X-X-X] INDICATES NUMBER OF 3/4"Øx4 1/2" HEADED STUDS EVENLY DISTRIBUTED BETWEEN WF BEAMS ON WF GIRDERS. REF. SHEET 7/S6.03 FOR TYPICAL COMPOSITE BEAM STUD SPACING DETAIL.
9. <X"> INDICATES UPWARD CAMBER AT MID SPAN.
10. D - X INDICATES SPAN DIRECTION OF DECK. REF. SCHEDULE 1/S6.03 FOR DECK INFORMATION.
11. EL. XXX'-XX" INDICATES TOP OF SLAB ELEVATION.
12. EL. XXX'-XX" INDICATES BOTTOM OF DECK ELEVATION.
13. INDICATES MOMENT CONNECTION. REF. 2/S6.02 AND 3/S6.02 FOR DETAILS.
14. INDICATES SFRS COLLECTOR CONNECTION. REF. X/S6.0X FOR DETAILS.
15. INDICATES DIAGONAL BRACING AT WF BEAM. REF. 1/S6.05 AND 2/S6.05.
16. X INDICATES BEAM PENETRATION. REF. SCHEDULE 7/S6.02.
17. REF. SHEET S6.04 FOR TYPICAL DECK REINFORCING AT OPENINGS.
18. (A) INDICATES ABOVE.
19. (B) INDICATES BELOW.
20. INDICATES COLUMN BELOW.
21. INDICATES OSHA TIE OFF. REF. ***SS013.09 - SS013.11*** FOR CONNECTION DETAILS.
22. XXX INDICATES MEMBER PART OF SEISMIC FORCE RESISTING SYSTEM (SFRS). REF. GENERAL STRUCTURAL NOTES, SPECIFICATIONS, AND DETAILS FOR REQUIREMENTS.
23. X / XX.XX' INDICATES FOOTING TYPE REF. SCHEDULE. INDICATES TOP OF FOOTING ELEVATION.

BR|IC ARCHITECTURE, INC.
1233 NW NORTHRUP STREET, SUITE 100
PORTLAND, OR 97209 T 503.595.4900

New Middle School / High School
Seaside School District
1801 S. FRANKLIN STREET, SEASIDE, OREGON 97138
t: 503-738-5591

kpff
111 SW Fifth Ave., Suite 2500
Portland, OR 97204
O: 503.227.3251
F: 503.227.7980
www.kpff.com
10021700078R17

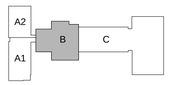

phase	BP2-PERMIT SET
date	6/15/2018
revisions	
project #	17007

FRAMING PLAN ROOF - SECTOR B

S2.42

6/14/2018 12:13:05 PM
C:\LREVIT\100217000078_Courtney.Bradshaw@kpff.com.rvt

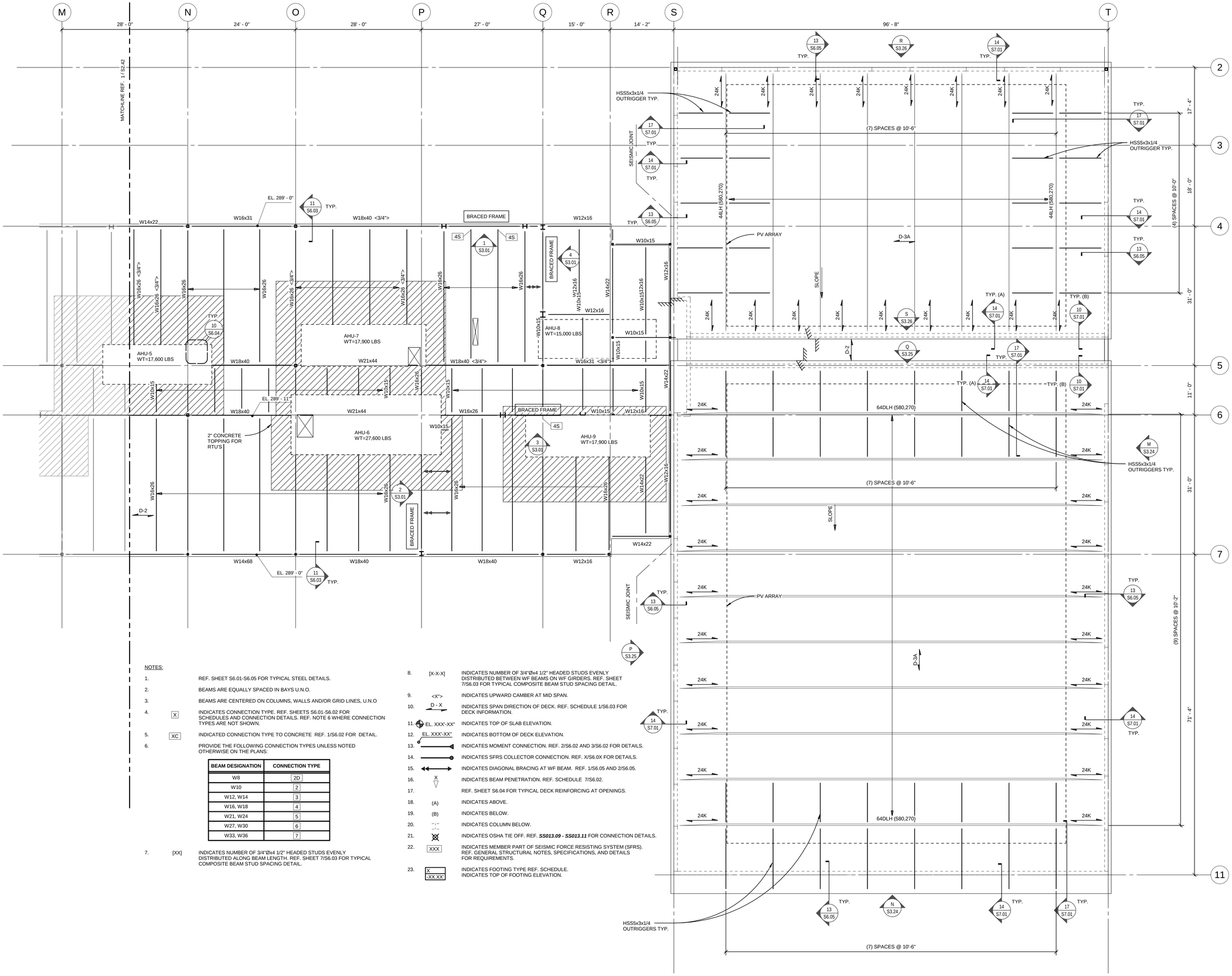

NOTES:

1. REF. SHEET S6.01-S6.05 FOR TYPICAL STEEL DETAILS.
2. BEAMS ARE EQUALLY SPACED IN BAYS U.N.O.
3. BEAMS ARE CENTERED ON COLUMNS, WALLS AND/OR GRID LINES, U.N.O
4. [X] INDICATES CONNECTION TYPE. REF. SHEETS S6.01-S6.02 FOR SCHEDULES AND CONNECTION DETAILS. REF. NOTE 6 WHERE CONNECTION TYPES ARE NOT SHOWN.
5. [XC] INDICATED CONNECTION TYPE TO CONCRETE REF. 1/S6.02 FOR DETAIL.
6. PROVIDE THE FOLLOWING CONNECTION TYPES UNLESS NOTED OTHERWISE ON THE PLANS:

BEAM DESIGNATION	CONNECTION TYPE
W8	2D
W10	2
W12, W14	3
W16, W18	4
W21, W24	5
W27, W30	6
W33, W36	7

7. [XX] INDICATES NUMBER OF 3/4"Øx4 1/2" HEADED STUDS EVENLY DISTRIBUTED ALONG BEAM LENGTH. REF. SHEET 7/S6.03 FOR TYPICAL COMPOSITE BEAM STUD SPACING DETAIL.
8. [X-X-X] INDICATES NUMBER OF 3/4"Øx4 1/2" HEADED STUDS EVENLY DISTRIBUTED BETWEEN WF BEAMS ON WF GIRDERS. REF. SHEET 7/S6.03 FOR TYPICAL COMPOSITE BEAM STUD SPACING DETAIL.
9. <X"> INDICATES UPWARD CAMBER AT MID SPAN.
10. D - X INDICATES SPAN DIRECTION OF DECK. REF. SCHEDULE 1/S6.03 FOR DECK INFORMATION.
11. EL. XXX'-XX" INDICATES TOP OF SLAB ELEVATION.
12. EL. XXX'-XX" INDICATES BOTTOM OF DECK ELEVATION.
13. INDICATES MOMENT CONNECTION. REF. 2/S6.02 AND 3/S6.02 FOR DETAILS.
14. INDICATES SFRS COLLECTOR CONNECTION. REF. X/S6.0X FOR DETAILS.
15. INDICATES DIAGONAL BRACING AT WF BEAM. REF. 1/S6.05 AND 2/S6.05.
16. X INDICATES BEAM PENETRATION. REF. SCHEDULE 7/S6.02.
17. REF. SHEET S6.04 FOR TYPICAL DECK REINFORCING AT OPENINGS.
18. (A) INDICATES ABOVE.
19. (B) INDICATES BELOW.
20. "↓" "↑" INDICATES COLUMN BELOW.
21. INDICATES OSHA TIE OFF. REF. ***SS013.09 - SS013.11*** FOR CONNECTION DETAILS.
22. XXX INDICATES MEMBER PART OF SEISMIC FORCE RESISTING SYSTEM (SFRS). REF. GENERAL STRUCTURAL NOTES, SPECIFICATIONS, AND DETAILS FOR REQUIREMENTS.
23. X / -XX.XX" INDICATES FOOTING TYPE REF. SCHEDULE. INDICATES TOP OF FOOTING ELEVATION.

1 FRAMING PLAN ROOF - SECTOR C
1/8" = 1'-0"

6/14/2018 12:13:07 PM
C:\LREVIT\100217000078_Courtney.Bradshaw@kpff.com.rvt

BR|IC ARCHITECTURE, INC.
1233 NW NORTHRUP STREET, SUITE 100
PORTLAND, OR 97209 T 503.595.4900

New Middle School / High School
Seaside School District
1801 S. FRANKLIN STREET, SEASIDE, OREGON 97138
t: 503-738-5591

kpff
111 SW Fifth Ave., Suite 2500
Portland, OR 97204
O: 503.227.3251
F: 503.227.7980
www.kpff.com
10021700078R17

A2 A1 B C

phase	BP2-PERMIT SET
date	6/15/2018
revisions	
project #	17007

FRAMING PLAN ROOF - SECTOR C

S2.43

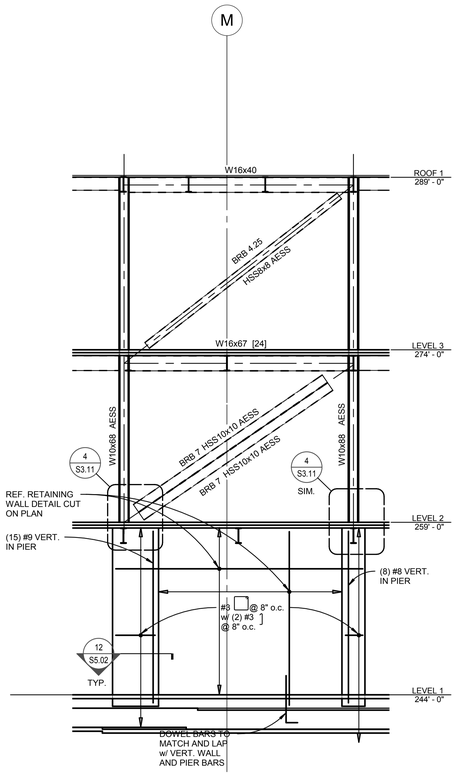

5 BRACED FRAME ELEVATION ALONG GRID 4
3/16" = 1'-0"

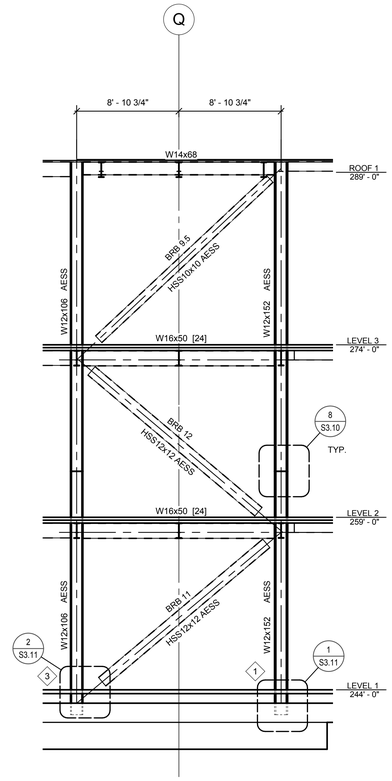

3 BRACED FRAME ELEVATION ALONG GRID 6
3/16" = 1'-0"

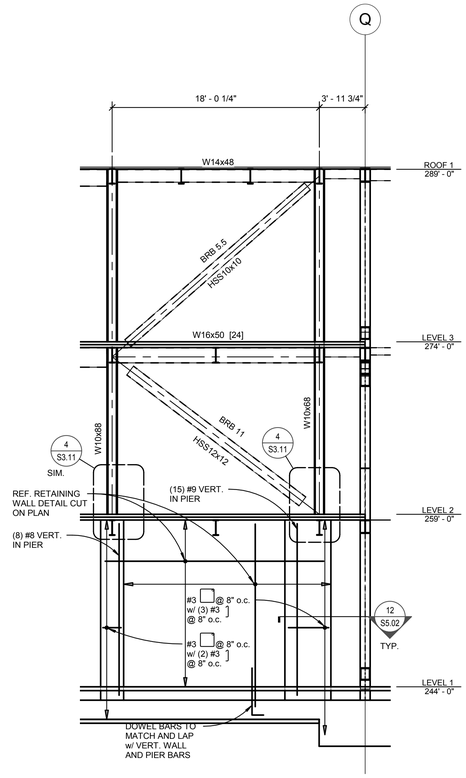

1 BRACED FRAME ELEVATION ALONG GRID 4
3/16" = 1'-0"

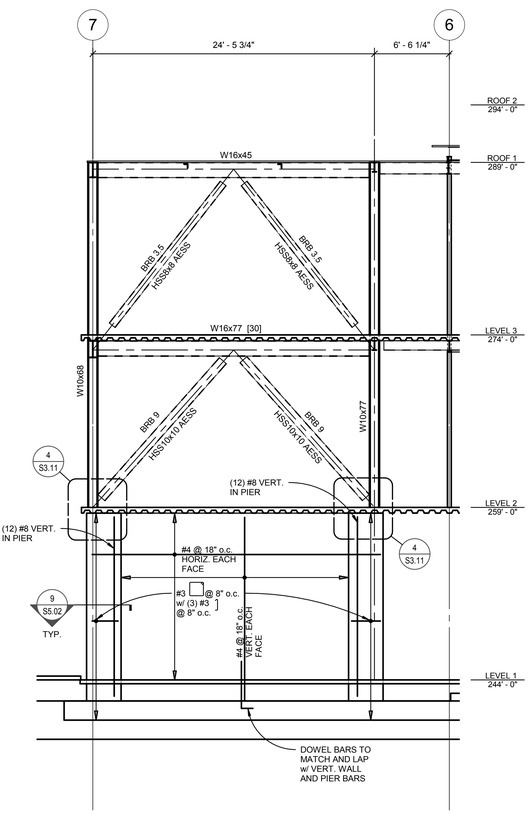

6 BRACED FRAME ELEVATION ALONG GRID E
3/16" = 1'-0"

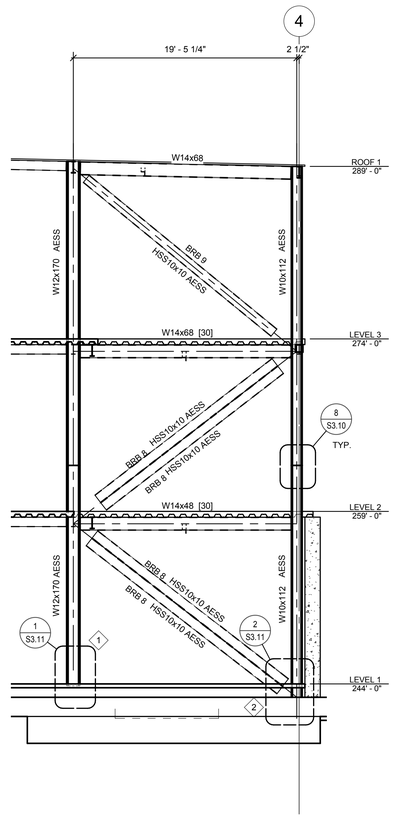

4 BRACED FRAME ELEVATION ALONG GRID Q
3/16" = 1'-0"

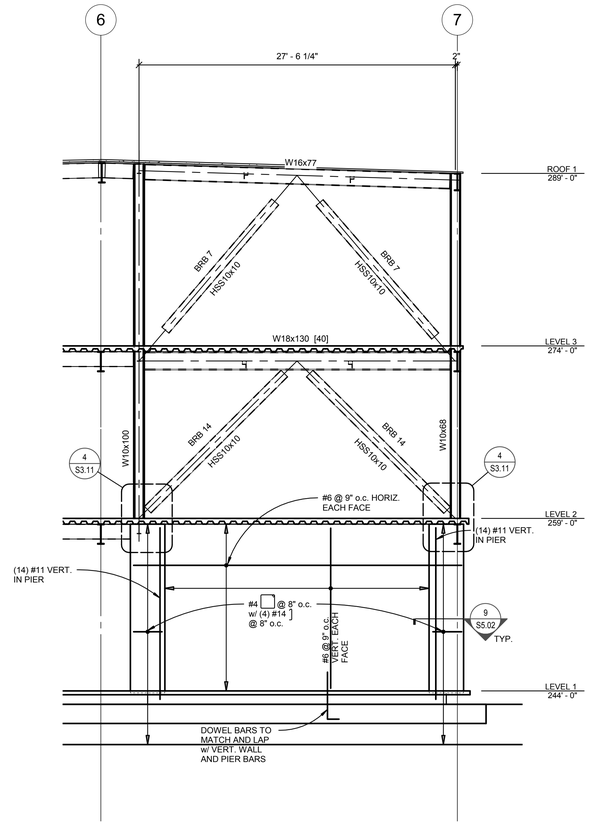

2 BRACED FRAME ELEVATION ALONG GRID P
3/16" = 1'-0"

6/14/2018 12:09:42 PM
C:\1REVIT\100217000078_Courtney.Bradshaw@kpff.com.rvt

BR|IC
ARCHITECTURE, INC.
1233 NW NORTHRUP STREET, SUITE 100
PORTLAND, OR 97209 T 503.595.4900

New Middle School / High School
Seaside School District
1801 S. FRANKLIN STREET, SEASIDE, OREGON 97138
t: 503-738-5591

kpff
111 SW Fifth Ave., Suite 2500
Portland, OR 97204
O: 503.227.3251
F: 503.227.7980
www.kpff.com
10021700078R17

REGISTERED PROFESSIONAL ENGINEER
15,773
OREGON
JAN. 21, 1994
JERALD L. ABUTE
EXPIRES 12-31-19

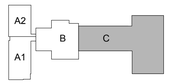

phase	BP2-PERMIT SET
date	6/15/2018
revisions	
project #	17007

BRACED FRAME ELEVATIONS

S3.01

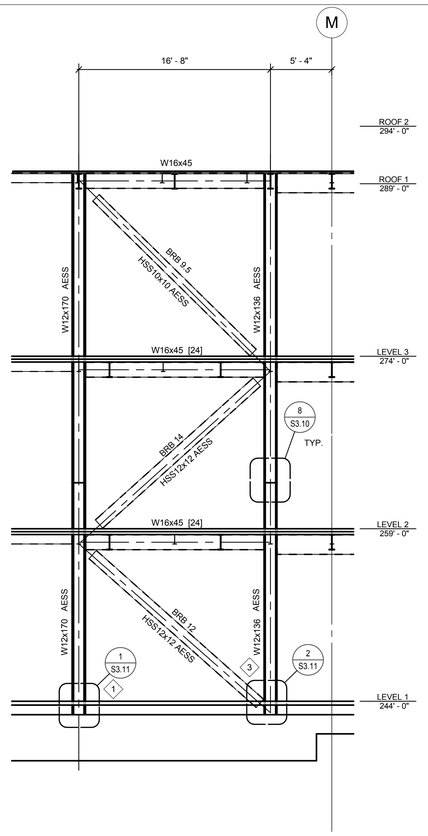

11 BRACED FRAME ELEVATION ALONG GRID 6
3/16" = 1'-0"

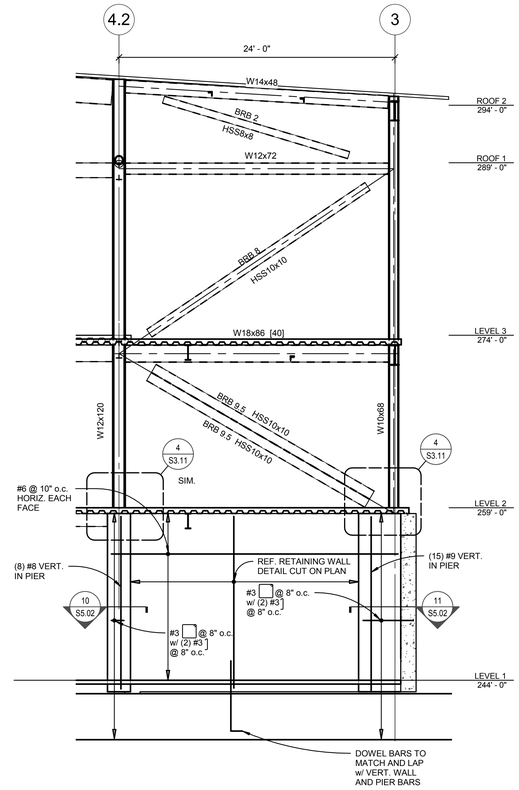

9 BRACED FRAME ELEVATION ALONG GRID G
3/16" = 1'-0"

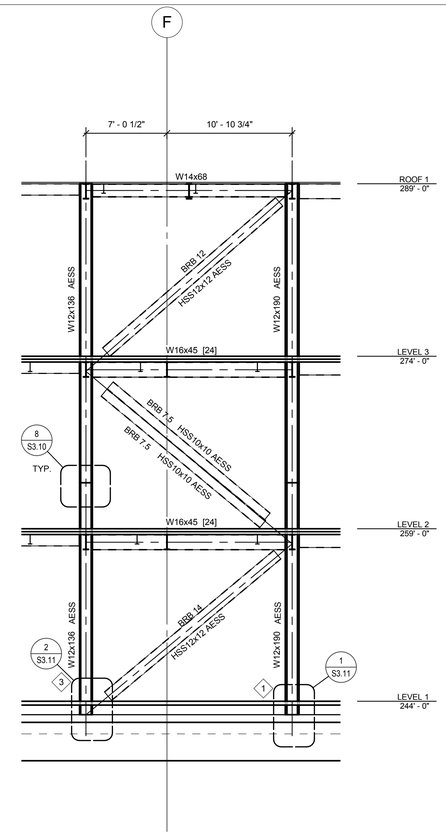

7 BRACED FRAME ELEVATION ALONG GRID 6
3/16" = 1'-0"

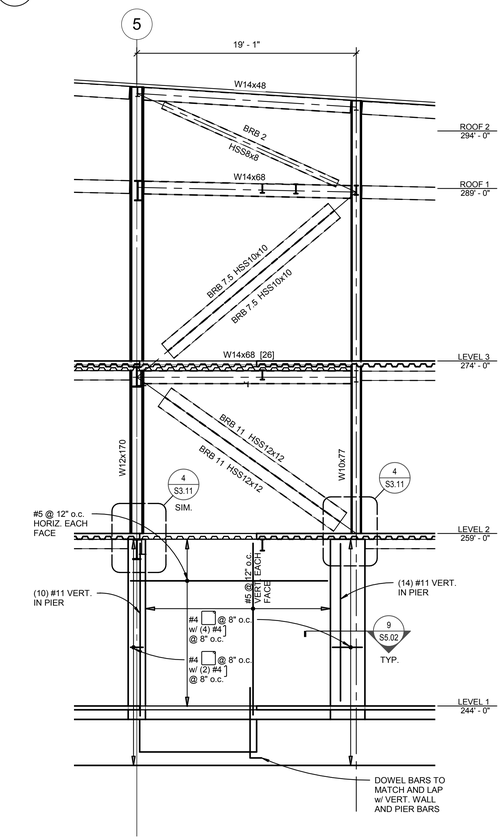

10 BRACED FRAME ELEVATION ALONG GRID L
3/16" = 1'-0"

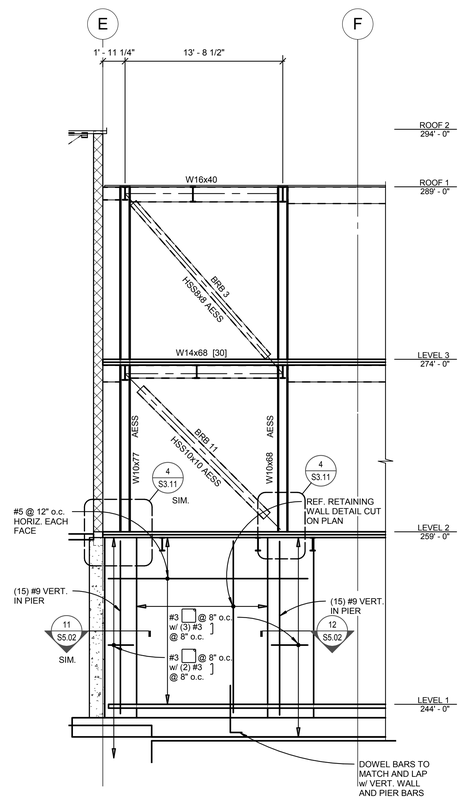

8 BRACED FRAME ELEVATION ALONG GRID 5.2
3/16" = 1'-0"

6/14/2018 12:09:45 PM
C:\1REVIT\100217000078_Courtney.Bradshaw@kpff.com.rvt

BR|IC
ARCHITECTURE, INC.
1233 NW NORTHRUP STREET, SUITE 100
PORTLAND, OR 97209 T 503.595.4900

New Middle School / High School
Seaside School District
1801 S. FRANKLIN STREET, SEASIDE, OREGON 97138
t: 503-738-5591

kpff
111 SW Fifth Ave., Suite 2500
Portland, OR 97204
O: 503.227.3251
F: 503.227.7980
www.kpff.com
10021700078R17

KENTUCKY REGISTERED PROFESSIONAL ENGINEER 15773 OREGON DECEMBER 31, 1994 GERALD L. ADOLFE
EXPIRES 12-31-19

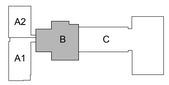

phase	BP2-PERMIT SET
date	6/15/2018
revisions	
project #	17007

BRACED FRAME ELEVATIONS

S3.02

BOLTED BEAM CONNECTION SCHEDULE			
CONN. TYPE	QUANTITY OF BOLTS "N"	CONN. PL THICKNESS "t"	WELD SIZE "W"
XB	X	X"	X"
XB	X	X"	X"

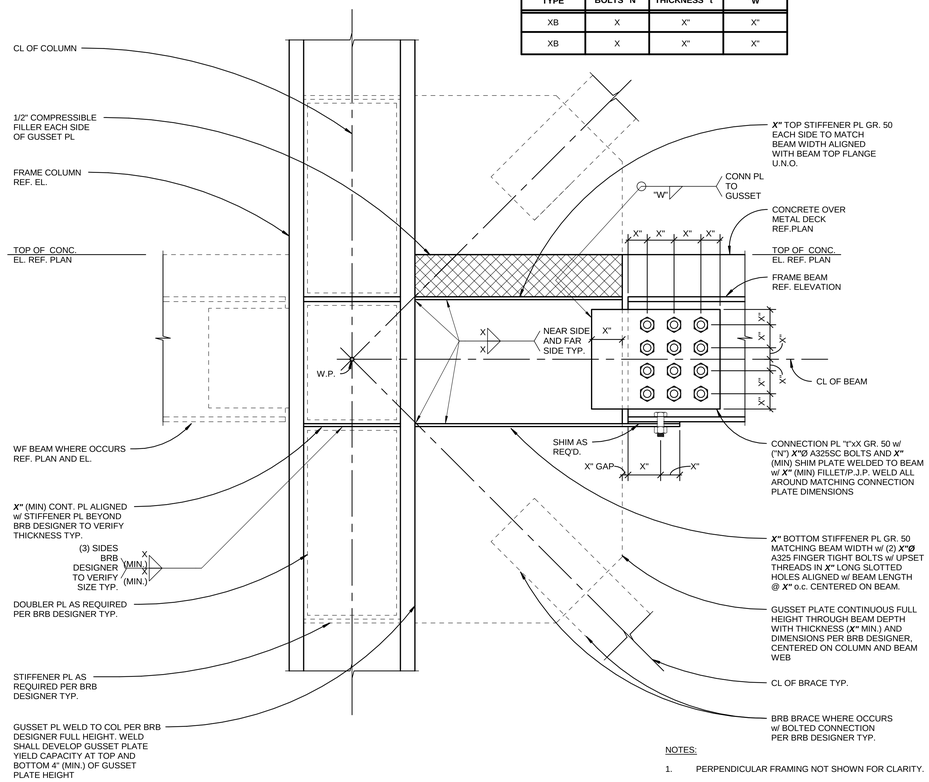

NOTES:

1. PERPENDICULAR FRAMING NOT SHOWN FOR CLARITY.
2. REF. 11/S3.11 FOR DOUBLER PLATES.
3. REF. 12/S3.11 FOR CONTINUITY AND STIFFENER PLATES.
4. REF. 9/S3.10 FOR WELD ACCESS HOLES.

6 BRB JOINT CONNECTION
1 1/2" = 1'-0"

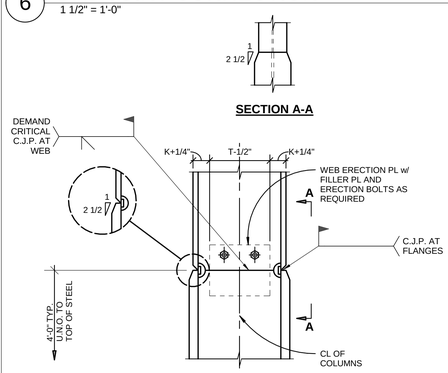

8 SFRS COLUMN SPLICE
1" = 1'-0"

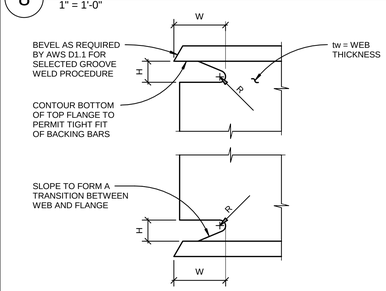

W = GREATER OF 1.5tw OR 1 1/2" (TOLERANCE = +/- 1/4")
H = GREATER OF 1.5tw OR 1" BUT NOT GREATER THAN 2".
R = 3/8" RADIUS MINIMUM

NOTE:
REF. SPECIFICATIONS FOR ADDITIONAL REQUIREMENTS ASSOCIATED WITH DEMAND CRITICAL WELDS.

9 WELD ACCESS HOLE
1" = 1'-0"

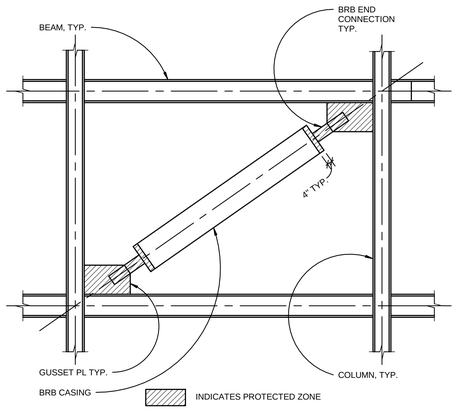

PROTECTED ZONE REQUIREMENTS

(1) WITHIN THE PROTECTED ZONE, DISCONTINUITIES CREATED BY FABRICATION OR ERECTION OPERATIONS, SUCH AS TACK WELDS, ERECTION AIDS, AIR-ARC GOUGING AND THERMAL CUTTING SHALL BE REPAIRED AS REQUIRED BY ENGINEER OF RECORD.

(2) WELDED, BOLTED, SCREWED OR SHOT-IN ATTACHMENTS FOR PERIMETER EDGE ANGLES, EXTERIOR FACADES, PARTITIONS, DUCK WORK, PIPING OR OTHER CONSTRUCTION SHALL NOT BE PLACED WITHIN THE PROTECTED ZONE.

7 PROTECTED ZONE REQ'MTS AT BUCKLING RESTRAINED BRACED FRAMES
1/4" = 1'-0"

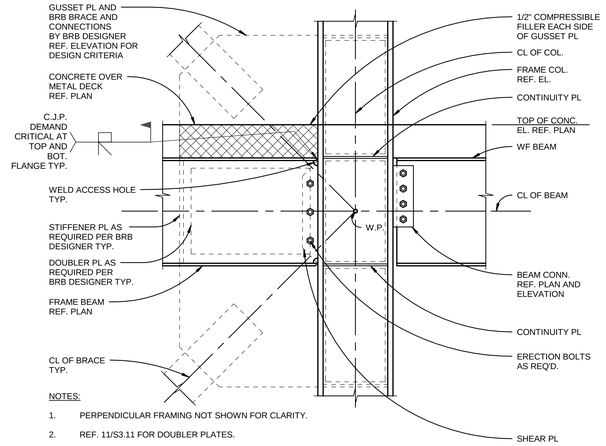

NOTES:

1. PERPENDICULAR FRAMING NOT SHOWN FOR CLARITY.
2. REF. 11/S3.11 FOR DOUBLER PLATES.
3. REF. 12/S3.11 FOR CONTINUITY AND STIFFENER PLATES.
4. REF. 9/S3.10 FOR WELD ACCESS HOLES.
5. REF. 5/S3.10 FOR BEAM SHEAR PL.

3 BRBF JOINT CONNECTION
1" = 1'-0"

ALL MEMBERS AND CONNECTIONS ON THIS SHEET ARE PART OF THE SEISMIC FORCE RESISTING SYSTEM (SFRS). REFERENCE GENERAL STRUCTURAL NOTES, QUALITY ASSURANCE PLAN, AND SPECIFICATIONS FOR ADDITIONAL REQUIREMENTS.

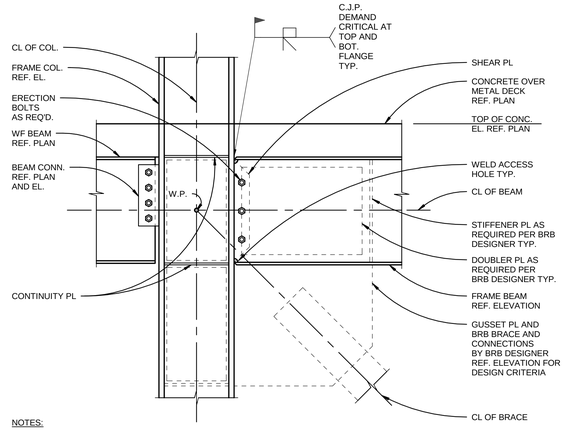

NOTES:

1. PERPENDICULAR FRAMING NOT SHOWN FOR CLARITY.
2. REF. 11/S3.11 FOR DOUBLER PLATES.
3. REF. 12/S3.11 FOR CONTINUITY AND STIFFENER PLATES.
4. REF. 9/S3.10 FOR WELD ACCESS HOLES.
5. REF. 5/S3.10 FOR BEAM SHEAR PL.

4 BRBF JOINT CONNECTION
1" = 1'-0"

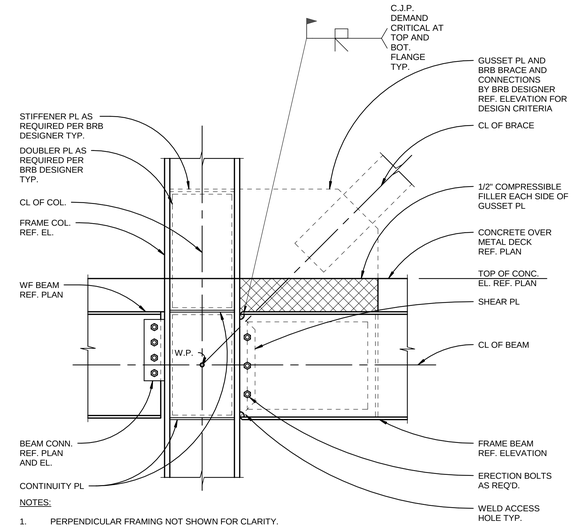

NOTES:

1. PERPENDICULAR FRAMING NOT SHOWN FOR CLARITY.
2. REF. 11/S3.11 FOR DOUBLER PLATES.
3. REF. 12/S3.11 FOR CONTINUITY AND STIFFENER PLATES.
4. REF. 9/S3.10 FOR WELD ACCESS HOLES.
5. REF. 5/S3.10 FOR BEAM SHEAR PL.

1 BRBF JOINT CONNECTION
1" = 1'-0"

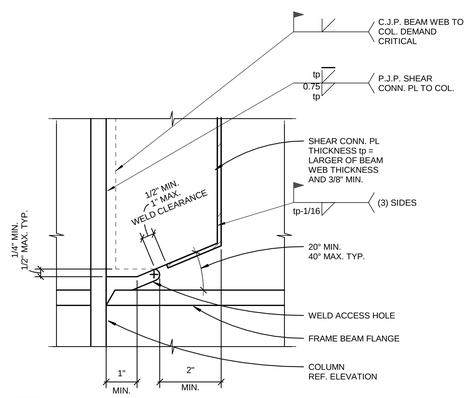

NOTES:

1. CONNECT TO PLATE IN LIEU OF COLUMN FLANGE WHERE FRAME BEAM FRAMES INTO COLUMN WEB (SIM. CONDITION).
2. FOR WELD ACCESS HOLE REF. 9/S3.10.
3. ERECTION BOLTS NOT SHOWN FOR CLARITY.

5 BRBF FRAME BEAM SHEAR PLATE
6" = 1'-0"

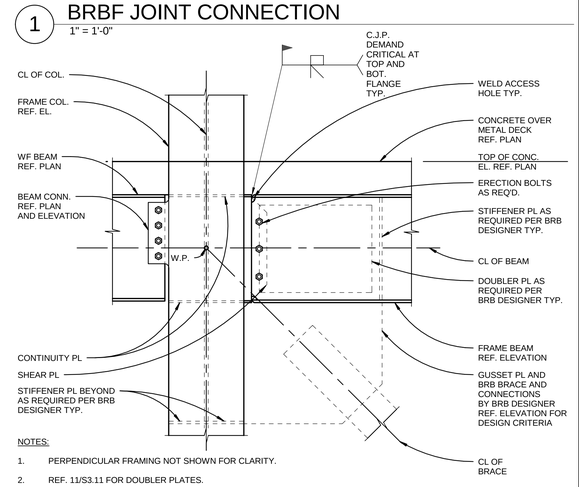

NOTES:

1. PERPENDICULAR FRAMING NOT SHOWN FOR CLARITY.
2. REF. 11/S3.11 FOR DOUBLER PLATES.
3. REF. 12/S3.11 FOR CONTINUITY AND STIFFENER PLATES.
4. REF. 9/S3.10 FOR WELD ACCESS HOLES.
5. REF. 5/S3.10 FOR BEAM SHEAR PL.

2 BRBF JOINT CONNECTION
1" = 1'-0"

BR|IC ARCHITECTURE, INC.
1233 NW NORTHRUP STREET, SUITE 100
PORTLAND, OR 97209 T 503.595.4900

New Middle School / High School
Seaside School District
1801 S. FRANKLIN STREET, SEASIDE, OREGON 97138
t: 503-738-5591

kpff
111 SW Fifth Ave., Suite 2500
Portland, OR 97204
O: 503.227.3251
F: 503.227.7980
www.kpff.com
10021700078R17

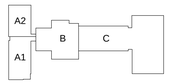

phase	BP2-PERMIT SET
date	6/15/2018
revisions	
project #	17007

BRACED FRAME DETAILS

S3.10

6/14/2018 12:13:11 PM
C:\1REVIT\10021700078_Courtney.Bradshaw@kpff.com.rvt

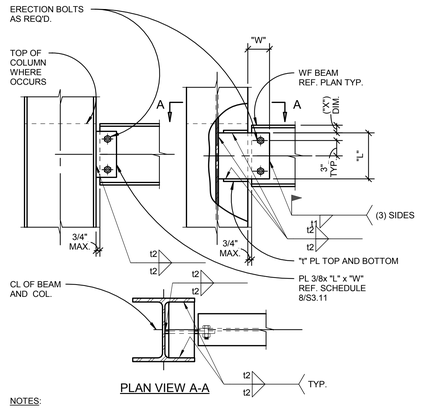

PLAN VIEW A-A

NOTES:

1. FOR ("X") DIMENSION REF. DETAIL 4/S6.01.
2. DESIGNATED ⊙— .
3. FOR WELDED TAB COLLECTOR SCHEDULE REF. 8/S3.11.

7 COLLECTOR BEAM TO COLUMN DETAIL

1" = 1'-0"

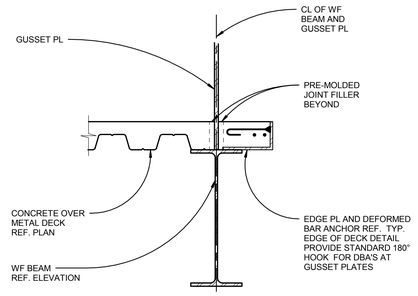

8 DECK EDGE AT BRACE FRAME GUSSET PLATE

1" = 1'-0"

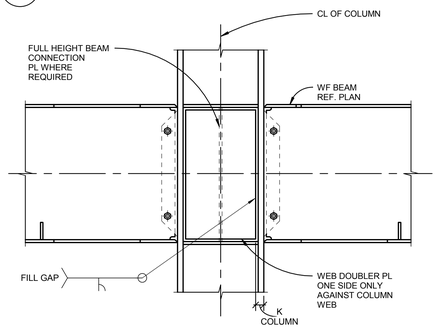

NOTE:
REF. PLAN FOR BEAM TO COLUMN CONNECTION.

9 COLUMN WEB DOUBLER PLATE

1" = 1'-0"

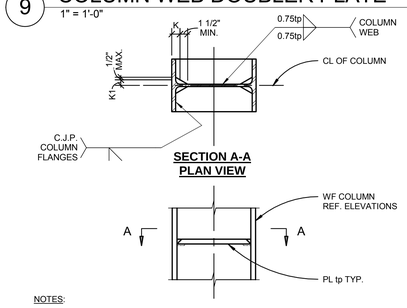

NOTES:

1. tp= THICKER OF THE TWO BEAM FLANGES FRAMING INTO EACH SIDE OF COLUMN (TWO SIDED MOMENT CONNECTIONS) OR ONE HALF BEAM FLANGE THICKNESS FOR SINGLE SIDED MOMENT CONNECTION.
2. REF. SPECIFICATIONS FOR BACKING BAR AND WELD RUNOFF TAB REQUIREMENTS.

10 COLUMN CONTINUITY PLATE DETAIL

1" = 1'-0"

BRB ANCHORAGE SCHEDULE

TYPE	DETAIL	BASE PLATE DIMENSION (IN.)			ANCHOR RODS		UPLIFT PL DIMENSIONS (IN.)			SHEAR LUG	
		"t"	"b"	"d"	NO.	DIA.	"t"	"b"	"d"	SIZE	EMBEDMENT
1	1/S.311	2 1/2"	22"	24"	(8)	2 1/4"	1 1/2"	22"	24"	-	-
2	2/S.311	2 1/2"	20"	21"	(8)	2 1/4"	1 1/2"	20"	21"	W14x176	24"
3	2/S.311	2 1/2"	22"	24"	(8)	2 1/4"	1 1/2"	22"	24"	W14x176	24"
4											

NOTES:

1. BASE PL AND UPLIFT PL TO BE GR. 55
2. ANCHOR RODS TO BE F1554 GR. 105
3. FULL "d"* DIMENSION FOR BASE PL IN DETAIL 2/S3.11 WILL BE DETERMINED BY GUSSET DESIGN.

3 TYP. ANCHORAGE SCHEDULE

1" = 1'-0"

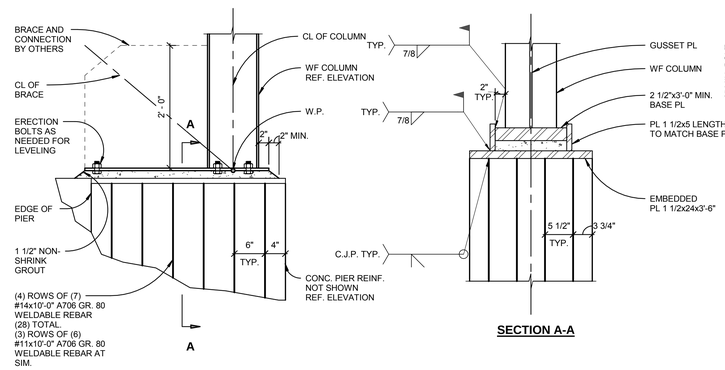

4 BRB ANCHORAGE AT CONCRETE WALL PIER

1" = 1'-0"

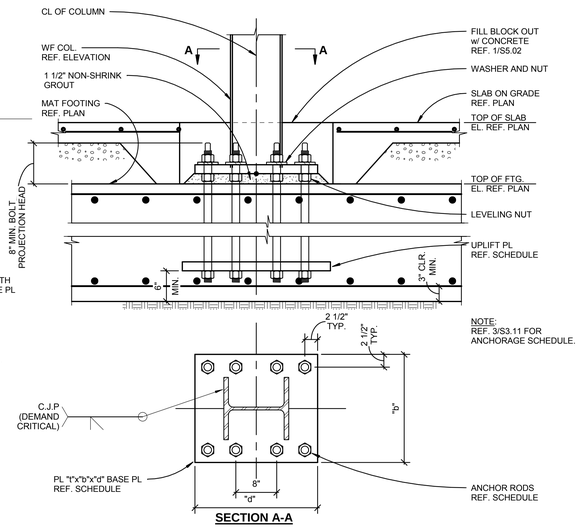

NOTE:
REF. 3/S3.11 FOR ANCHORAGE SCHEDULE.

1 TYP. BRB ANCHORAGE DETAIL

1" = 1'-0"

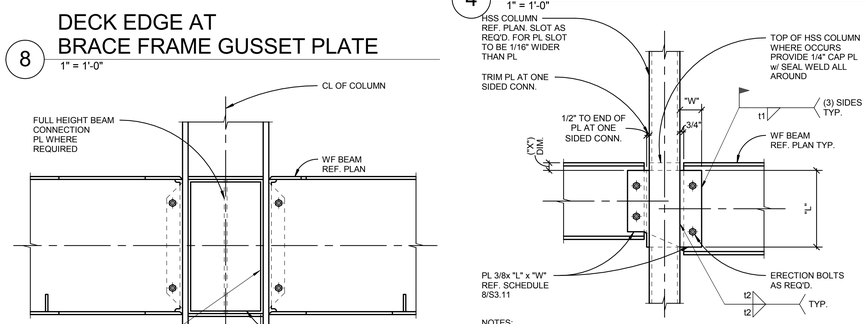

NOTES:

1. FOR ("X") DIMENSION REF. DETAIL 4/S6.01.
2. DESIGNATED ⊙— .
3. FOR WELDED TAB COLLECTOR SCHEDULE REF. 8/S3.11.

5 COLLECTOR BEAM TO HSS COLUMN DETAIL

1" = 1'-0"

WELDED TAB COLLECTOR SCHEDULE

BEAM DESIGNATION	PLATE LENGTH "L"	PLATE WIDTH "W"	WELD t1	WELD t2

6 WELDED TAB COLLECTOR SCHEDULE

1" = 1'-0"

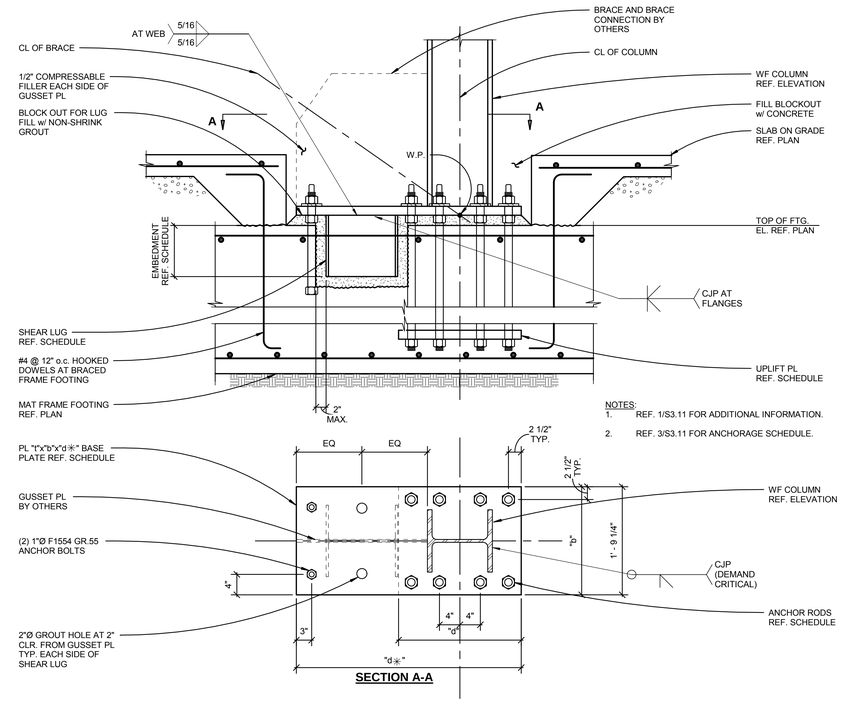

NOTES:

1. REF. 1/S3.11 FOR ADDITIONAL INFORMATION.
2. REF. 3/S3.11 FOR ANCHORAGE SCHEDULE.

2 BRB BASE PLATE AT WF COLUMN

1" = 1'-0"

ALL MEMBERS AND CONNECTIONS ON THIS SHEET ARE PART OF THE SEISMIC FORCE RESISTING SYSTEM (SFRS). REFERENCE GENERAL STRUCTURAL NOTES, QUALITY ASSURANCE PLAN, AND SPECIFICATIONS FOR ADDITIONAL REQUIREMENTS.

BR|IC ARCHITECTURE, INC.
1233 NW NORTHRUP STREET, SUITE 100
PORTLAND, OR 97209 T 503.595.4900

New Middle School / High School
Seaside School District
1801 S. FRANKLIN STREET, SEASIDE, OREGON 97138
t: 503-738-5591

kpff
111 SW Fifth Ave., Suite 2500
Portland, OR 97204
O: 503.227.3251
F: 503.227.7980
www.kpff.com
10021700078R17

STRUCTURAL REGISTERED PROFESSIONAL ENGINEER 15773 OREGON JUL 21 1998 JERALD L ADUTE
EXPIRES 12-31-19

A2 A1 B C

phase	BP2-PERMIT SET
date	6/15/2018
revisions	
project #	17007

BRACED FRAME DETAILS

S3.11

6/14/2018 12:09:49 PM
C:\REVIT\100217000078_Courtney.Bradshaw@kpff.com.rvt

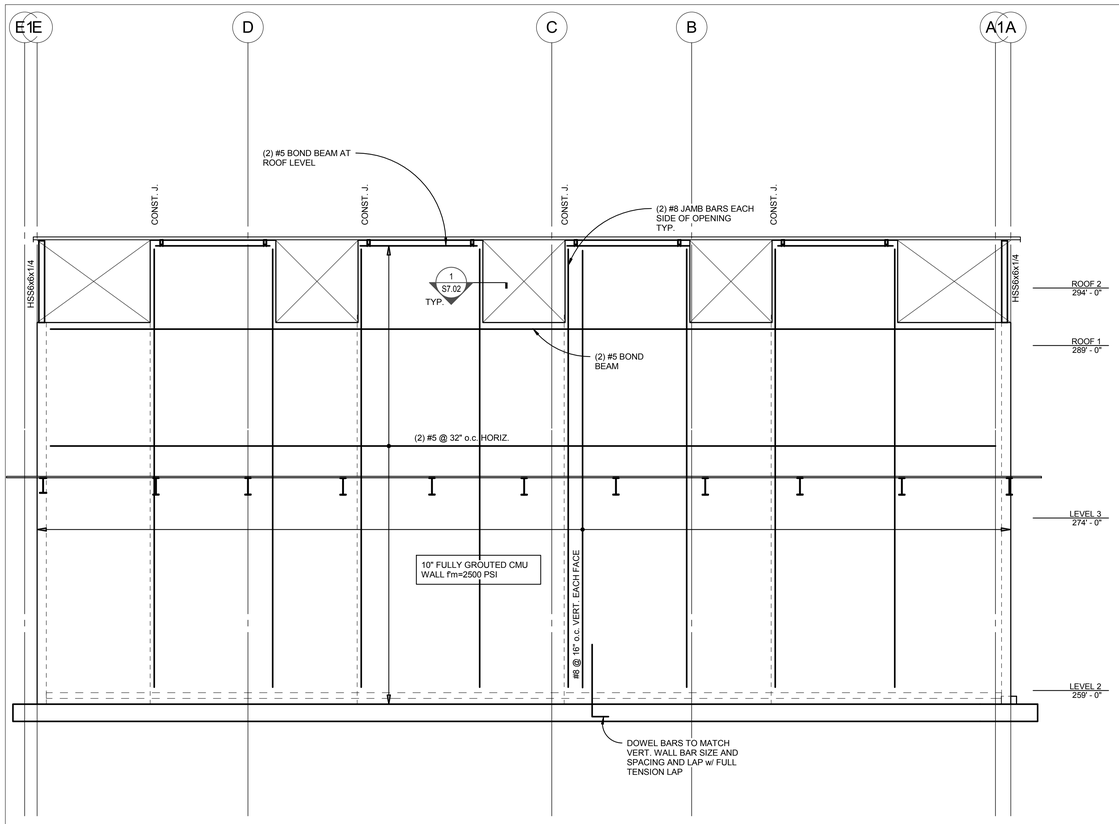

C CMU WALL ELEVATION ALONG GRID 1
3/16" = 1'-0"

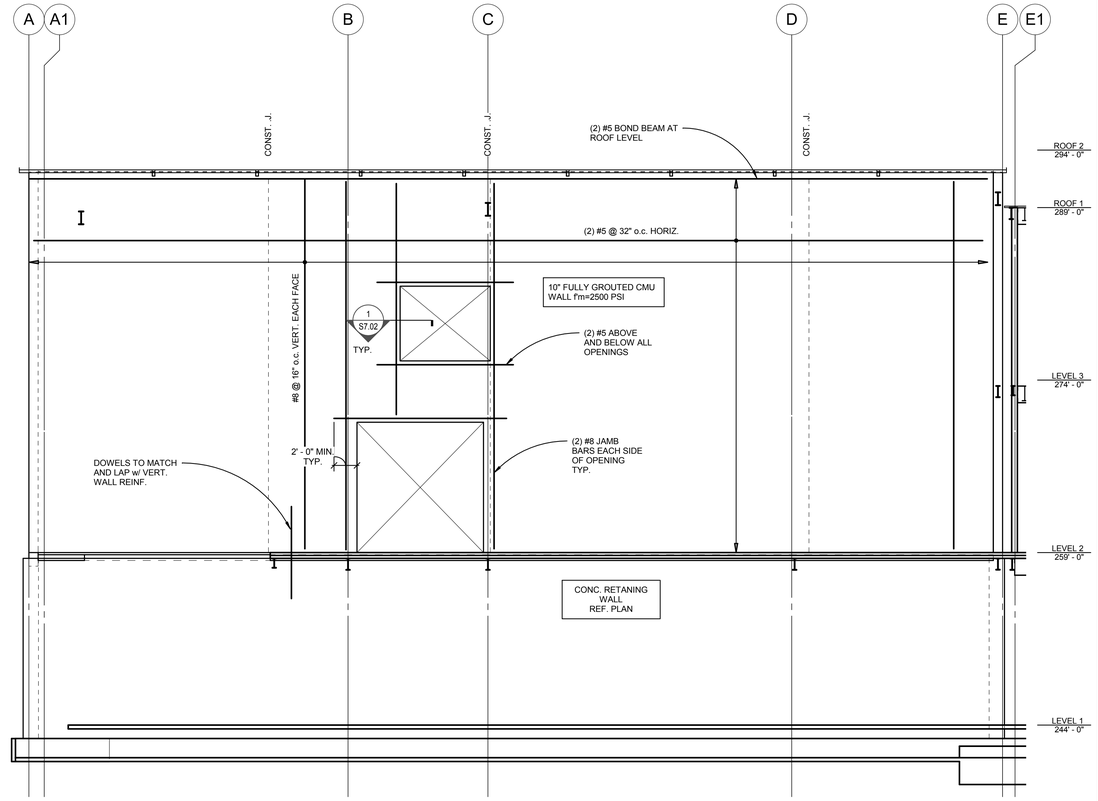

A CMU WALL ELEVATION ALONG GRID 5
3/16" = 1'-0"

NOTES:

1. REINFORCEMENT TO BE PROVIDED PER GENERAL STRUCTURAL NOTES ON SHEETS S0.02 AND S0.03 U.N.O.
2. REF. ARCH. AND MECH. DRAWINGS FOR OPENINGS TO BE COORDINATED w/ STRUCTURAL DRAWINGS.
3. ALL CMU WALLS SHOWN ON ELEVATIONS ARE PART OF THE SLRS.
4. REF. S7.01 FOR TYPICAL CMU DETAILS. CONFIRM DIMENSIONS w/ ARCH. DRAWINGS.
5. C.J. INDICATES CONTROL JOINT LOCATIONS. REF. 3/S7.01 FOR DETAIL.
6. ALL CMU WALLS TO BE FULLY GROUTED.
7. TOP OF ARCHITECTURAL OPENINGS TO ALIGN w/ FULL CMU BLOCK. VERIFY REQUIREMENTS FOR DIMENSION OF STARTER COURSE BASED ON FIELD CONDITION.
8. ALIGN VERTICAL OPENINGS w/ HALF OF FULL BLOCK TYP.
9. REF. ARCHITECTURAL ELEVATIONS FOR COURSING REQUIREMENTS.
10. NO PLUMBING SHALL BE RUN VERTICALLY IN WALLS.
11. CONDUITS IN CMU WALLS SHALL BE NO LARGER THAN 1 1/2" O.D. WITH NO MORE THAN ONE CONDUIT PER CELL OR (2) 1" O.D. CONDUIT SHALL NOT BE LOCATED IN VERTICALLY CELLS WITH REINFORCING AND SHALL RUN VERTICALLY IN WALLS. IN (2) ADJACENT CELLS THEN NO MORE FOR 48".
12. CONST. J. INDICATES CONSTRUCTION JOINT LOCATION. REF. 3/S7.01 FOR DETAIL.
13. HORIZONTAL CONDUITS IN CMU SHALL BE NO CLOSER THAN 48" o.c. AND ONLY LOCATED IN CELLS NOT CONTAINING HORIZ. REINF. IN 12" CMU IT IS PERMITTED TO USE (2) 1" O.D. OR (1) 1.5 O.D. IN A SINGLE COURSE. IN 8" CMU IT IS PERMITTED TO USE (2) 3/4" O.D. OR (1) 1.25" O.D. IN A SINGLE COURSE.

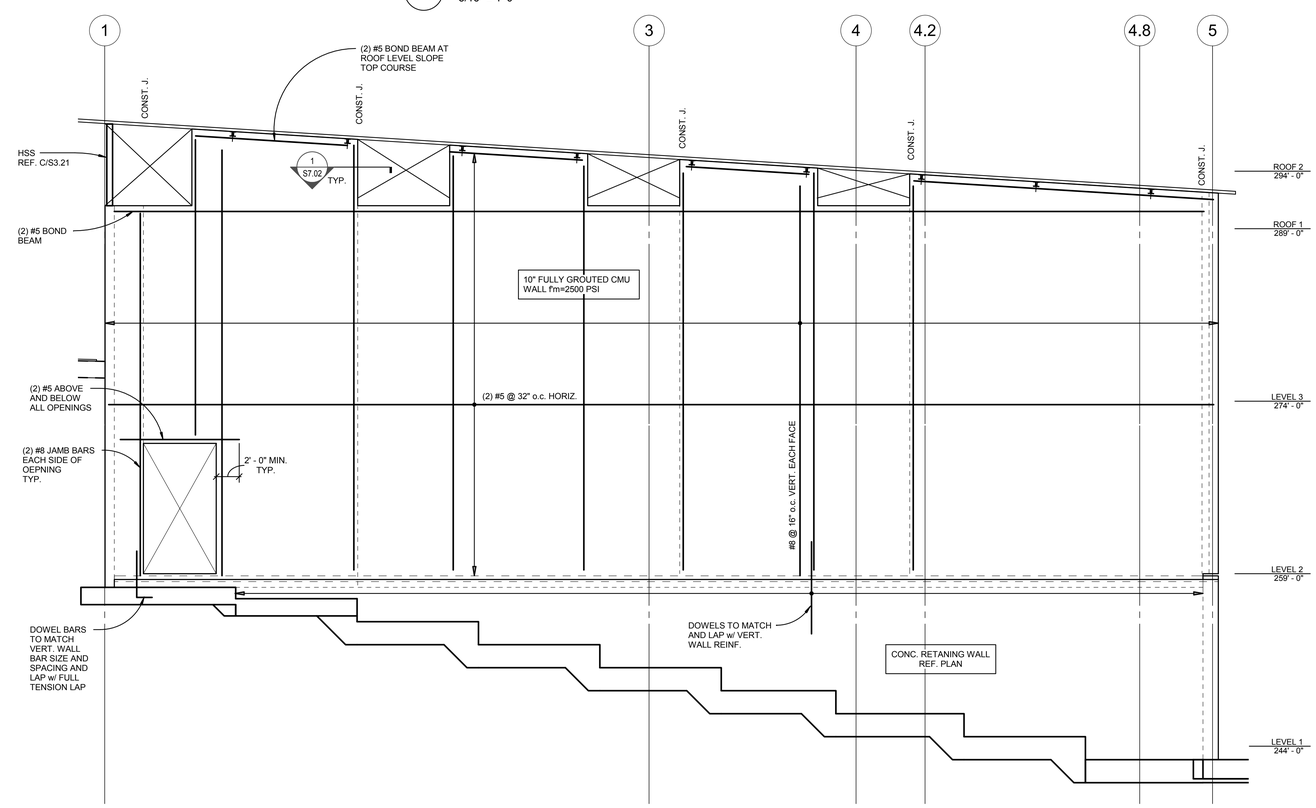

B CMU WALL ELEVATION ALONG GRID A
3/16" = 1'-0"

BR|IC ARCHITECTURE, INC.
1233 NW NORTHRUP STREET, SUITE 100
PORTLAND, OR 97209 T 503.595.4900

New Middle School / High School
Seaside School District
1801 S. FRANKLIN STREET, SEASIDE, OREGON 97138
t: 503-738-5591

kpff
111 SW Fifth Ave., Suite 2500
Portland, OR 97204
O: 503.227.3251
F: 503.227.7980
www.kpff.com
10021700078R17

STRUCTURAL REGISTERED PROFESSIONAL ENGINEER 15773 OREGON JUL 21 1987 JERALD L ADAME
EXPIRES 12-31-19

A2 A1 B C

phase	BP2-PERMIT SET
date	6/15/2018
revisions	
project #	17007

CMU WALL ELEVATIONS - SECTOR A

S3.21

6/14/2018 12:09:52 PM
C:\REVIT\10021700078_Courtney.Bradshaw@kpff.com.rvt

NOTES:

1. REINFORCEMENT TO BE PROVIDED PER GENERAL STRUCTURAL NOTES ON SHEETS S0.02 AND S0.03 U.N.O.
2. REF. ARCH. AND MECH. DRAWINGS FOR OPENINGS TO BE COORDINATED w/ STRUCTURAL DRAWINGS.
3. ALL CMU WALLS SHOWN ON ELEVATIONS ARE PART OF THE SLRS.
4. REF. S7.01 FOR TYPICAL CMU DETAILS. CONFIRM DIMENSIONS w/ ARCH. DRAWINGS.
5. C.J. INDICATES CONTROL JOINT LOCATIONS. REF. 3/S7.01 FOR DETAIL.
6. ALL CMU WALLS TO BE FULLY GROUTED.
7. TOP OF ARCHITECTURAL OPENINGS TO ALIGN w/ FULL CMU BLOCK. VERIFY REQUIREMENTS FOR DIMENSION OF STARTER COURSE BASED ON FIELD CONDITION.
8. ALIGN VERTICAL OPENINGS w/ HALF OF FULL BLOCK TYP.
9. REF. ARCHITECTURAL ELEVATIONS FOR COURSING REQUIREMENTS.
10. NO PLUMBING SHALL BE RUN VERTICALLY IN WALLS.
11. CONDUITS IN CMU WALLS SHALL BE NO LARGER THAN 1 1/2" O.D. WITH NO MORE THAN ONE CONDUIT PER CELL OR (2) 1" O.D. CONDUIT SHALL NOT BE LOCATED IN VERTICALLY CELLS WITH REINFORCING AND SHALL RUN VERTICALLY IN WALLS. IN (2) ADJACENT CELLS THEN NO MORE FOR 48".
12. CONST. J. INDICATES CONSTRUCTION JOINT LOCATION. REF. 3/S7.01 FOR DETAIL.
13. HORIZONTAL CONDUITS IN CMU SHALL BE NO CLOSER THAN 48" o.c. AND ONLY LOCATED IN CELLS NOT CONTAINING HORIZ. REINF. IN 12" CMU IT IS PERMITTED TO USE (2) 1" O.D. OR (1) 1.5 O.D. IN A SINGLE COURSE. IN 8" CMU IT IS PERMITTED TO USE (2) 3/4" O.D. OR (1) 1.25" O.D. IN A SINGLE COURSE.

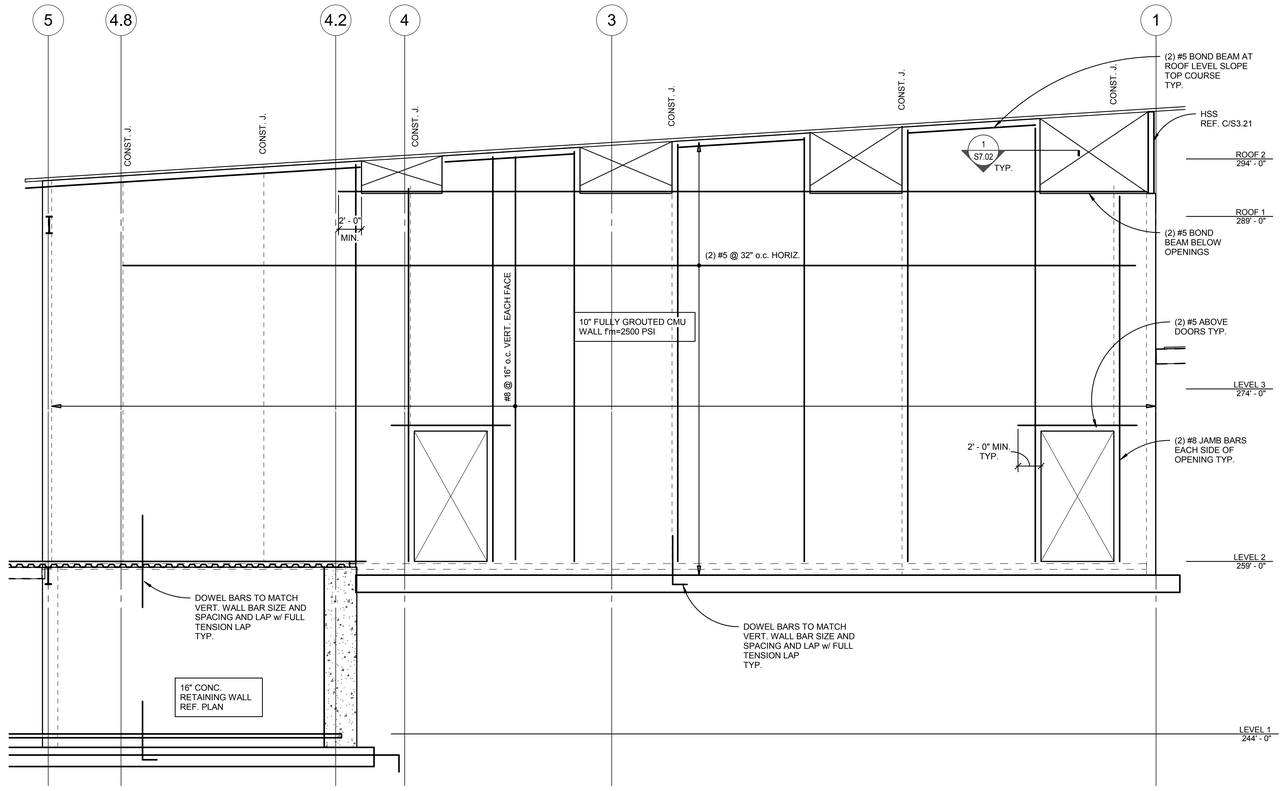

D CMU WALL ELEVATION ALONG GRID E
3/16" = 1'-0"

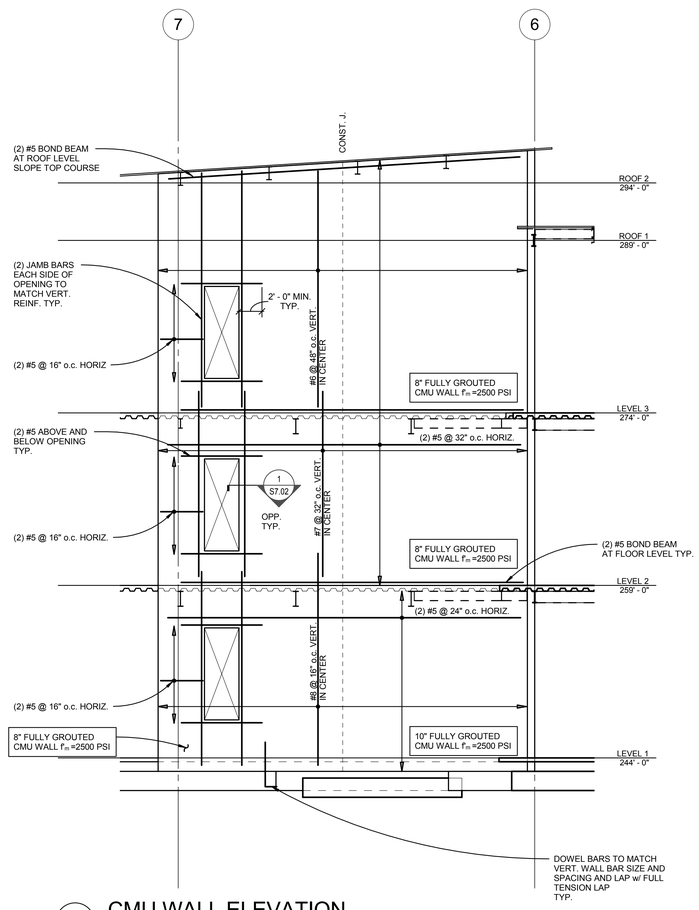

G CMU WALL ELEVATION
3/16" = 1'-0"

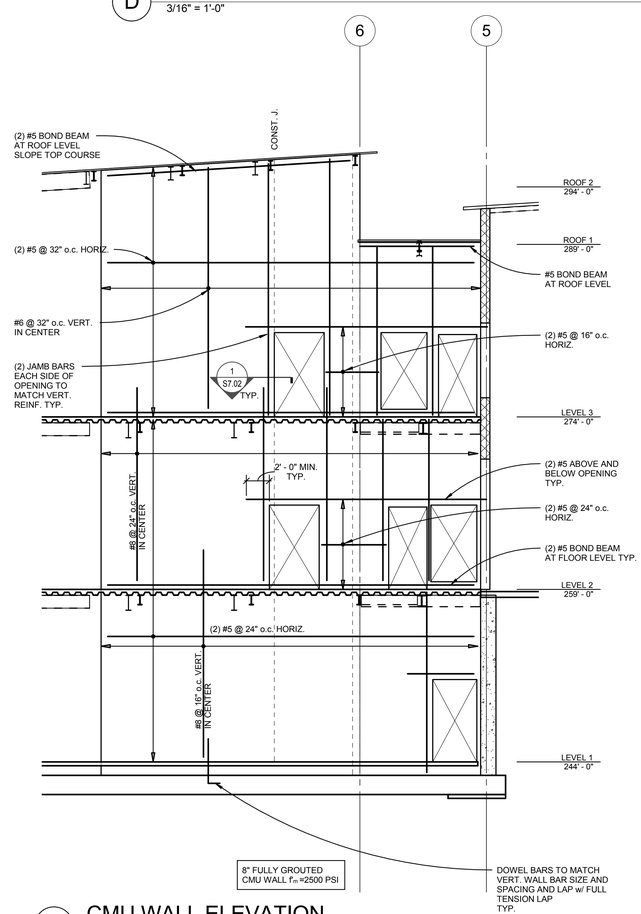

F CMU WALL ELEVATION
3/16" = 1'-0"

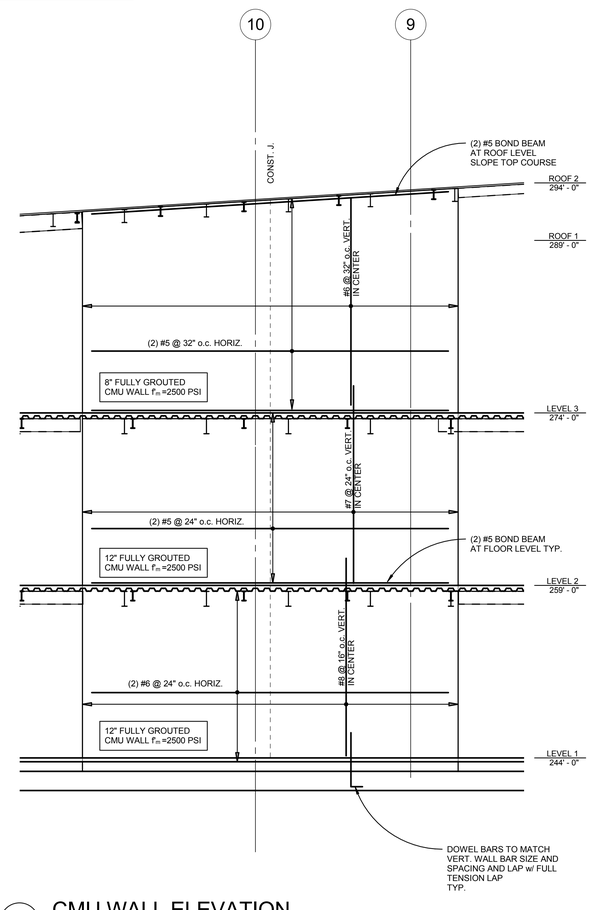

E CMU WALL ELEVATION
3/16" = 1'-0"

6/14/2018 12:09:55 PM
C:\1REVIT\100217000\78_Courtney.Bradshaw@kpff.com.rvt

BR|IC ARCHITECTURE, INC.
1233 NW NORTHRUP STREET, SUITE 100
PORTLAND, OR 97209 T 503.595.4900

New Middle School / High School
Seaside School District
1801 S. FRANKLIN STREET, SEASIDE, OREGON 97138
t: 503-738-5591

kpff
111 SW Fifth Ave., Suite 2500
Portland, OR 97204
O: 503.227.3251
F: 503.227.7980
www.kpff.com
10021700078R17

STRUCTURAL REGISTERED PROFESSIONAL ENGINEER 15.773 OREGON JAN. 21, 1983 GERALD L. ABUTE
EXPIRES 12-31-19

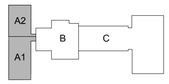

phase	BP2-PERMIT SET
date	6/15/2018
revisions	
project #	17007

CMU WALL ELEVATIONS - SECTOR A

S3.22

NOTES:

1. REINFORCEMENT TO BE PROVIDED PER GENERAL STRUCTURAL NOTES ON SHEETS S0.02 AND S0.03 U.N.O.
2. REF. ARCH. AND MECH. DRAWINGS FOR OPENINGS TO BE COORDINATED w/ STRUCTURAL DRAWINGS.
3. ALL CMU WALLS SHOWN ON ELEVATIONS ARE PART OF THE SLRS.
4. REF. S7.01 FOR TYPICAL CMU DETAILS. CONFIRM DIMENSIONS w/ ARCH. DRAWINGS.
5. C.J. INDICATES CONTROL JOINT LOCATIONS. REF. 3/S7.01 FOR DETAIL.
6. ALL CMU WALLS TO BE FULLY GROUTED.
7. TOP OF ARCHITECTURAL OPENINGS TO ALIGN w/ FULL CMU BLOCK. VERIFY REQUIREMENTS FOR DIMENSION OF STARTER COURSE BASED ON FIELD CONDITION.
8. ALIGN VERTICAL OPENINGS w/ HALF OF FULL BLOCK TYP.
9. REF. ARCHITECTURAL ELEVATIONS FOR COURSING REQUIREMENTS.
10. NO PLUMBING SHALL BE RUN VERTICALLY IN WALLS.
11. CONDUITS IN CMU WALLS SHALL BE NO LARGER THAN 1 1/2" O.D. WITH NO MORE THAN ONE CONDUIT PER CELL OR (2) 1" O.D. CONDUIT SHALL NOT BE LOCATED IN VERTICALLY CELLS WITH REINFORCING AND SHALL RUN VERTICALLY IN WALLS. IN (2) ADJACENT CELLS THEN NO MORE FOR 48".
12. CONST. J. INDICATES CONSTRUCTION JOINT LOCATION. REF. 3/S7.01 FOR DETAIL.
13. HORIZONTAL CONDUITS IN CMU SHALL BE NO CLOSER THAN 48" o.c. AND ONLY LOCATED IN CELLS NOT CONTAINING HORIZ. REINF. IN 12" CMU IT IS PERMITTED TO USE (2) 1" O.D. OR (1) 1.5 O.D. IN A SINGLE COURSE. IN 8" CMU IT IS PERMITTED TO USE (2) 3/4" O.D. OR (1) 1.25" O.D. IN A SINGLE COURSE.

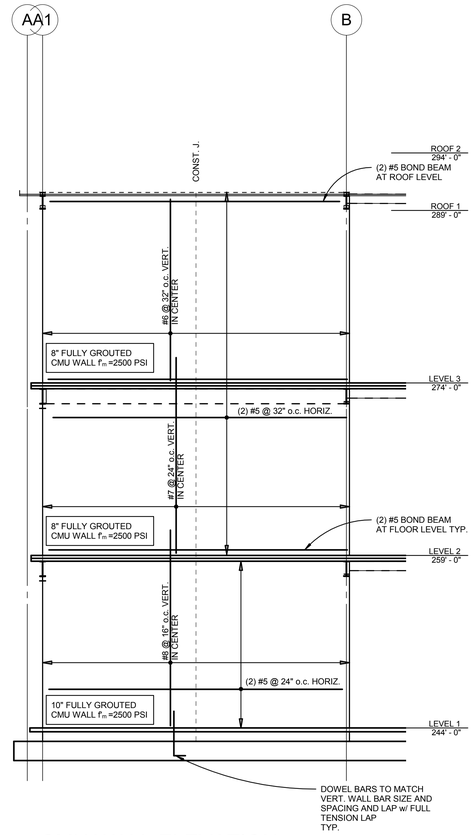

K CMU WALL ELEVATION
3/16" = 1'-0"

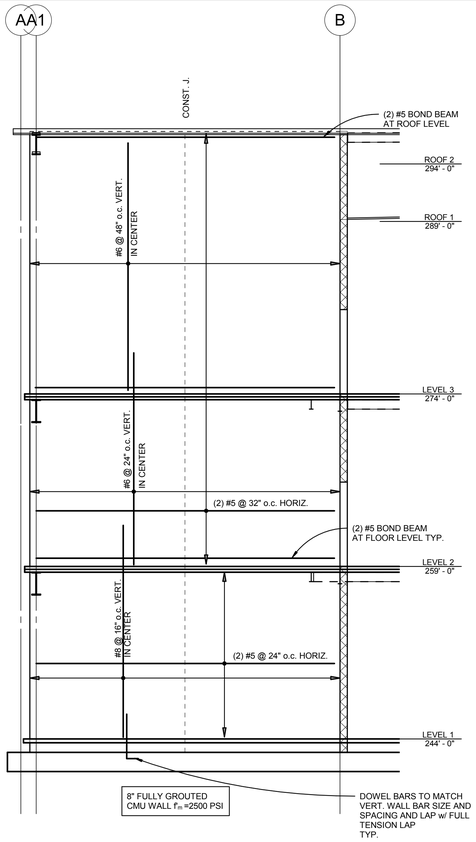

H CMU WALL ELEVATION
3/16" = 1'-0"

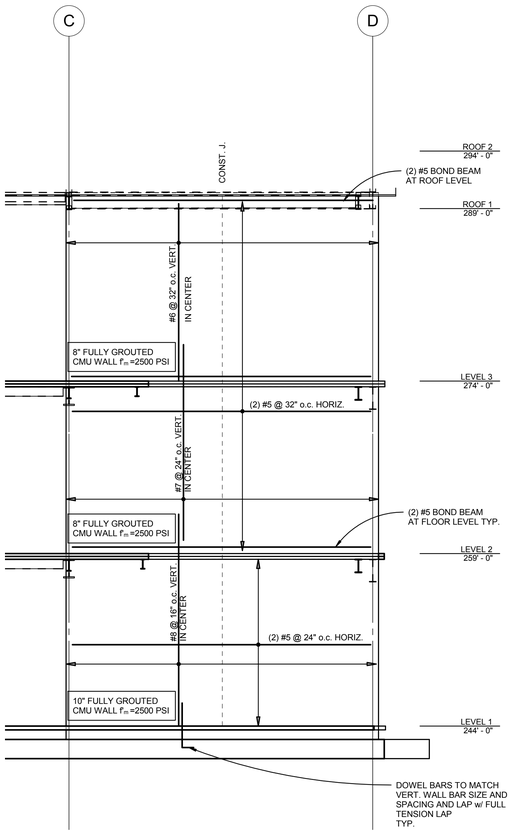

L CMU WALL ELEVATION
3/16" = 1'-0"

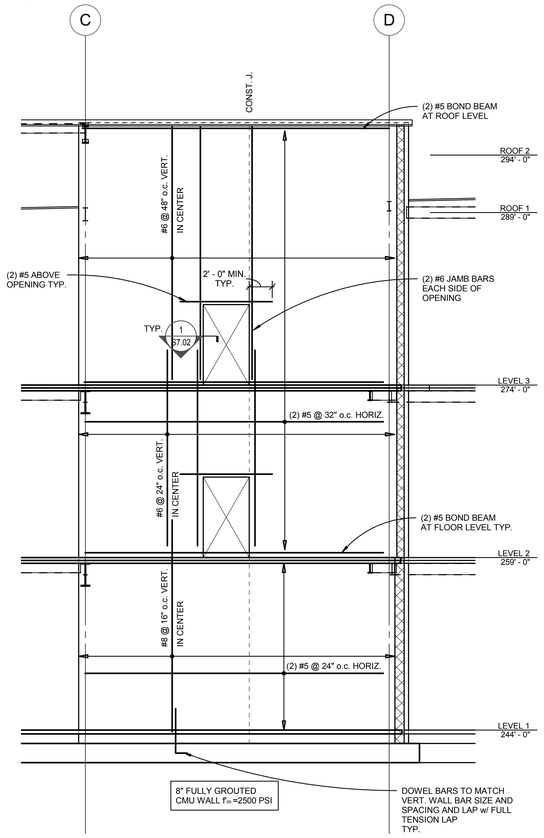

J CMU WALL ELEVATION
3/16" = 1'-0"

6/14/2018 12:09:58 PM
C:\1REVIT\100217000078_Courtney.Bradshaw@kpff.com.rvt

BR|IC ARCHITECTURE, INC.
1233 NW NORTHRUP STREET, SUITE 100
PORTLAND, OR 97209 T 503.595.4900

New Middle School / High School
Seaside School District
1801 S. FRANKLIN STREET, SEASIDE, OREGON 97138
t: 503-738-5591

kpff
111 SW Fifth Ave., Suite 2500
Portland, OR 97204
O: 503.227.3251
F: 503.227.7980
www.kpff.com
10021700078R17

STATE OF OREGON REGISTERED PROFESSIONAL ENGINEER 15773 GERALD L. ABUEL
EXPIRES 12-31-19

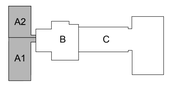

phase	BP2-PERMIT SET
date	6/15/2018
revisions	
project #	17007

CMU WALL ELEVATION - SECTOR A

S3.23

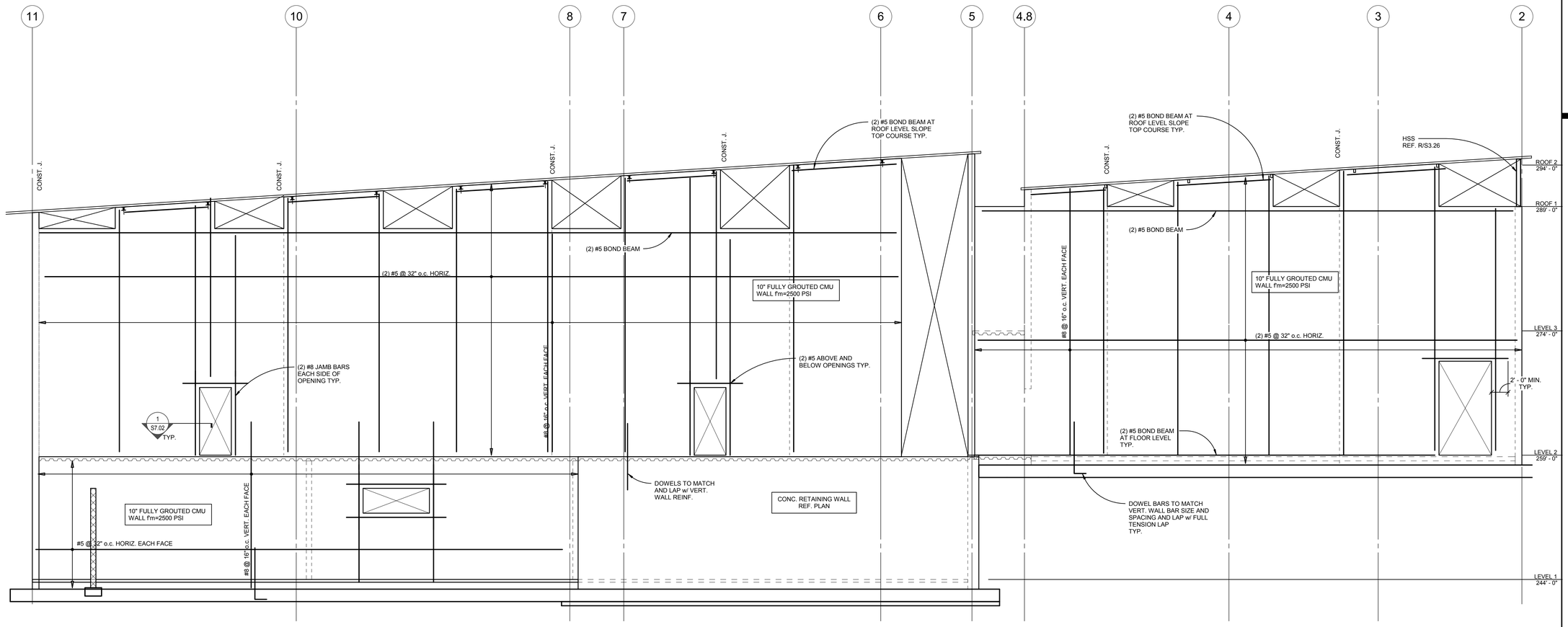

M CMU WALL ELEVATION ALONG GRID T
3/16" = 1'-0"

NOTES:

1. REINFORCEMENT TO BE PROVIDED PER GENERAL STRUCTURAL NOTES ON SHEETS S0.02 AND S0.03 U.N.O.
2. REF. ARCH. AND MECH. DRAWINGS FOR OPENINGS TO BE COORDINATED w/ STRUCTURAL DRAWINGS.
3. ALL CMU WALLS SHOWN ON ELEVATIONS ARE PART OF THE SLRS.
4. REF. S7.01 FOR TYPICAL CMU DETAILS. CONFIRM DIMENSIONS w/ ARCH. DRAWINGS.
5. C.J. INDICATES CONTROL JOINT LOCATIONS. REF. 3/S7.01 FOR DETAIL.
6. ALL CMU WALLS TO BE FULLY GROUTED.
7. TOP OF ARCHITECTURAL OPENINGS TO ALIGN w/ FULL CMU BLOCK. VERIFY REQUIREMENTS FOR DIMENSION OF STARTER COURSE BASED ON FIELD CONDITION.
8. ALIGN VERTICAL OPENINGS w/ HALF OF FULL BLOCK TYP.
9. REF. ARCHITECTURAL ELEVATIONS FOR COURSING REQUIREMENTS.
10. NO PLUMBING SHALL BE RUN VERTICALLY IN WALLS.
11. CONDUITS IN CMU WALLS SHALL BE NO LARGER THAN 1 1/2" O.D. WITH NO MORE THAN ONE CONDUIT PER CELL OR (2) 1" O.D. CONDUIT SHALL NOT BE LOCATED IN VERTICALLY CELLS WITH REINFORCING AND SHALL RUN VERTICALLY IN WALLS. IN (2) ADJACENT CELLS THEN NO MORE FOR 48".
12. CONST. J. INDICATES CONSTRUCTION JOINT LOCATION. REF. 3/S7.01 FOR DETAIL.
13. HORIZONTAL CONDUITS IN CMU SHALL BE NO CLOSER THAN 48" o.c. AND ONLY LOCATED IN CELLS NOT CONTAINING HORIZ. REINF. IN 12" CMU IT IS PERMITTED TO USE (2) 1" O.D. OR (1) 1.5 O.D. IN A SINGLE COURSE. IN 8" CMU IT IS PERMITTED TO USE (2) 3/4" O.D. OR (1) 1.25" O.D. IN A SINGLE COURSE.

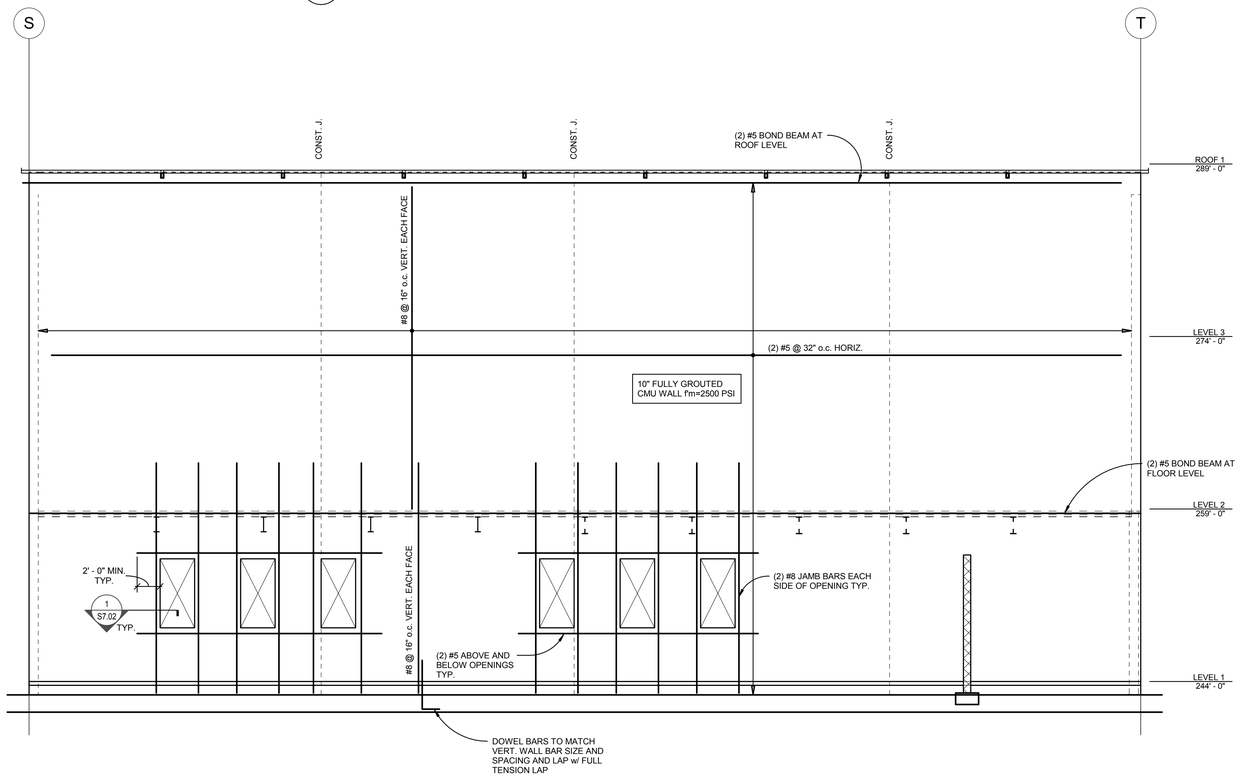

N CMU WALL ELEVATION ALONG GRID 11
3/16" = 1'-0"

6/14/2018 12:10:00 PM
C:\REVIT\100217000T8_Courtney.Bradshaw@kpff.com.rvt

BR|IC ARCHITECTURE, INC.
1233 NW NORTHRUP STREET, SUITE 100
PORTLAND, OR 97209 T 503.595.4900

New Middle School / High School
Seaside School District
1801 S. FRANKLIN STREET, SEASIDE, OREGON 97138
t: 503-738-5591

kpff
111 SW Fifth Ave., Suite 2500
Portland, OR 97204
O: 503.227.3251
F: 503.227.7980
www.kpff.com
100217000T8R17

STRUCTURAL REGISTERED PROFESSIONAL ENGINEER 15773 OREGON JAN. 21, 1994 JERALD L. ADAME
EXPIRES 12-31-19

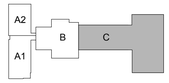

phase	BP2-PERMIT SET
date	6/15/2018
revisions	
project #	17007

CMU WALL ELEVATIONS - SECTOR C

S3.24

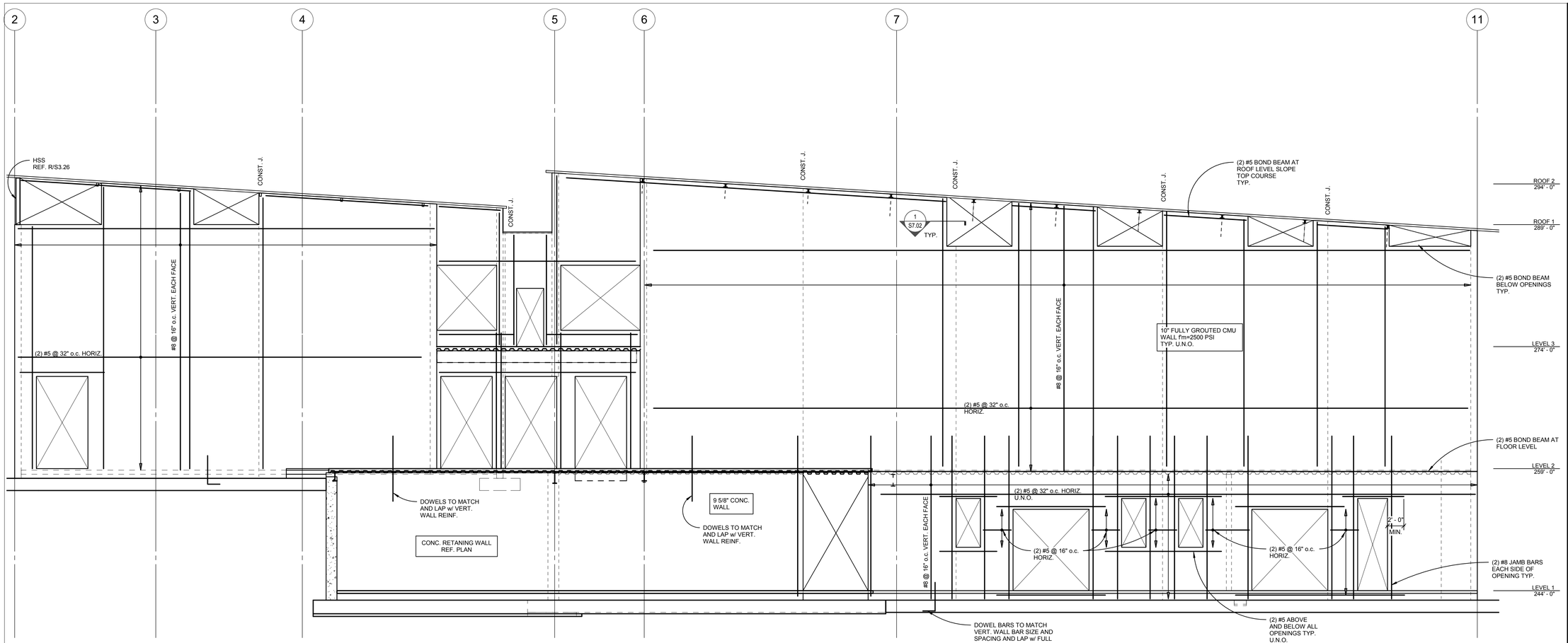

P CMU WALL ELEVATION ALONG GRID S
3/16" = 1'-0"

NOTES:

1. REINFORCEMENT TO BE PROVIDED PER GENERAL STRUCTURAL NOTES ON SHEETS S0.02 AND S0.03 U.N.O.
2. REF. ARCH. AND MECH. DRAWINGS FOR OPENINGS TO BE COORDINATED w/ STRUCTURAL DRAWINGS.
3. ALL CMU WALLS SHOWN ON ELEVATIONS ARE PART OF THE SLRS.
4. REF. S7.01 FOR TYPICAL CMU DETAILS. CONFIRM DIMENSIONS w/ ARCH. DRAWINGS.
5. C.J. INDICATES CONTROL JOINT LOCATIONS. REF. 3/S7.01 FOR DETAIL.
6. ALL CMU WALLS TO BE FULLY GROUTED.
7. TOP OF ARCHITECTURAL OPENINGS TO ALIGN w/ FULL CMU BLOCK. VERIFY REQUIREMENTS FOR DIMENSION OF STARTER COURSE BASED ON FIELD CONDITION.
8. ALIGN VERTICAL OPENINGS w/ HALF OF FULL BLOCK TYP.
9. REF. ARCHITECTURAL ELEVATIONS FOR COURSING REQUIREMENTS.
10. NO PLUMBING SHALL BE RUN VERTICALLY IN WALLS.
11. CONDUITS IN CMU WALLS SHALL BE NO LARGER THAN 1 1/2" O.D. WITH NO MORE THAN ONE CONDUIT PER CELL OR (2) 1" O.D. CONDUIT SHALL NOT BE LOCATED IN VERTICALLY CELLS WITH REINFORCING AND SHALL RUN VERTICALLY IN WALLS. IN (2) ADJACENT CELLS THEN NO MORE FOR 48".
12. CONST. J. INDICATES CONSTRUCTION JOINT LOCATION. REF. 3/S7.01 FOR DETAIL.
13. HORIZONTAL CONDUITS IN CMU SHALL BE NO CLOSER THAN 48" o.c. AND ONLY LOCATED IN CELLS NOT CONTAINING HORIZ. REINF. IN 12" CMU IT IS PERMITTED TO USE (2) 1" O.D. OR (1) 1.5 O.D. IN A SINGLE COURSE. IN 8" CMU IT IS PERMITTED TO USE (2) 3/4" O.D. OR (1) 1.25" O.D. IN A SINGLE COURSE.

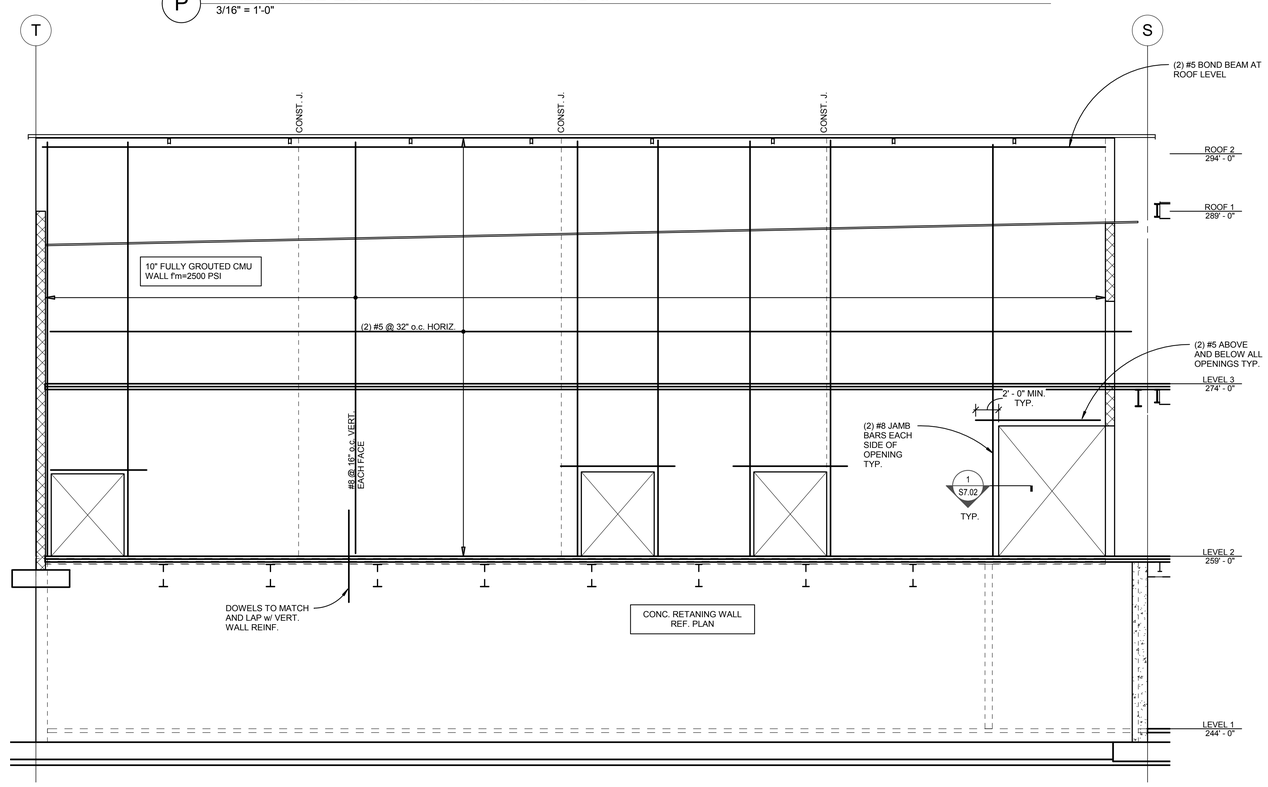

Q CMU WALL ELEVATION ALONG GRID 5
3/16" = 1'-0"

6/14/2018 12:10:02 PM
C:\REVIT\100217\00078_Courtney.Bradshaw@kpff.com.rvt

BR|IC
ARCHITECTURE, INC.
1233 NW NORTHRUP STREET, SUITE 100
PORTLAND, OR 97209 T 503.595.4900

New Middle School / High School
Seaside School District
1801 S. FRANKLIN STREET, SEASIDE, OREGON 97138
t: 503-738-5591

kpff
111 SW Fifth Ave., Suite 2500
Portland, OR 97204
O: 503.227.3251
F: 503.227.7980
www.kpff.com
10021700078R17

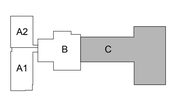

phase	BP2-PERMIT SET
date	6/15/2018
revisions	
project #	17007

CMU WALL ELEVATIONS - SECTOR C

S3.25

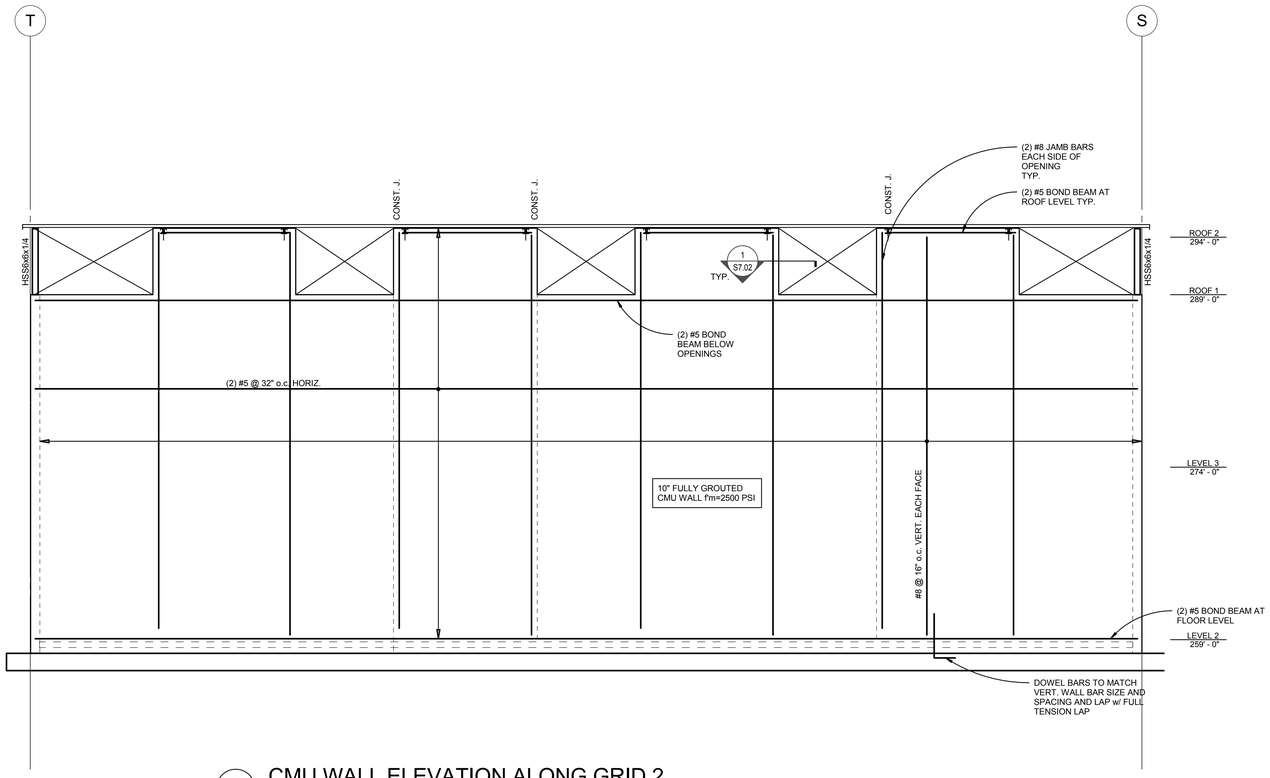

R CMU WALL ELEVATION ALONG GRID 2
3/16" = 1'-0"

NOTES:

1. REINFORCEMENT TO BE PROVIDED PER GENERAL STRUCTURAL NOTES ON SHEETS S0.02 AND S0.03 U.N.O.
2. REF. ARCH. AND MECH. DRAWINGS FOR OPENINGS TO BE COORDINATED w/ STRUCTURAL DRAWINGS.
3. ALL CMU WALLS SHOWN ON ELEVATIONS ARE PART OF THE SLRS.
4. REF. S7.01 FOR TYPICAL CMU DETAILS. CONFIRM DIMENSIONS w/ ARCH. DRAWINGS.
5. C.J. INDICATES CONTROL JOINT LOCATIONS. REF. 3/S7.01 FOR DETAIL.
6. ALL CMU WALLS TO BE FULLY GROUTED.
7. TOP OF ARCHITECTURAL OPENINGS TO ALIGN w/ FULL CMU BLOCK. VERIFY REQUIREMENTS FOR DIMENSION OF STARTER COURSE BASED ON FIELD CONDITION.
8. ALIGN VERTICAL OPENINGS w/ HALF OF FULL BLOCK TYP.
9. REF. ARCHITECTURAL ELEVATIONS FOR COURSING REQUIREMENTS.
10. NO PLUMBING SHALL BE RUN VERTICALLY IN WALLS.
11. CONDUITS IN CMU WALLS SHALL BE NO LARGER THAN 1 1/2" O.D. WITH NO MORE THAN ONE CONDUIT PER CELL OR (2) 1" O.D. CONDUIT SHALL NOT BE LOCATED IN VERTICALLY CELLS WITH REINFORCING AND SHALL RUN VERTICALLY IN WALLS. IN (2) ADJACENT CELLS THEN NO MORE FOR 48".
12. CONST. J. INDICATES CONSTRUCTION JOINT LOCATION. REF. 3/S7.01 FOR DETAIL.
13. HORIZONTAL CONDUITS IN CMU SHALL BE NO CLOSER THAN 48" o.c. AND ONLY LOCATED IN CELLS NOT CONTAINING HORIZ. REINF. IN 12" CMU IT IS PERMITTED TO USE (2) 1" O.D. OR (1) 1.5 O.D. IN A SINGLE COURSE. IN 8" CMU IT IS PERMITTED TO USE (2) 3/4" O.D. OR (1) 1.25" O.D. IN A SINGLE COURSE.

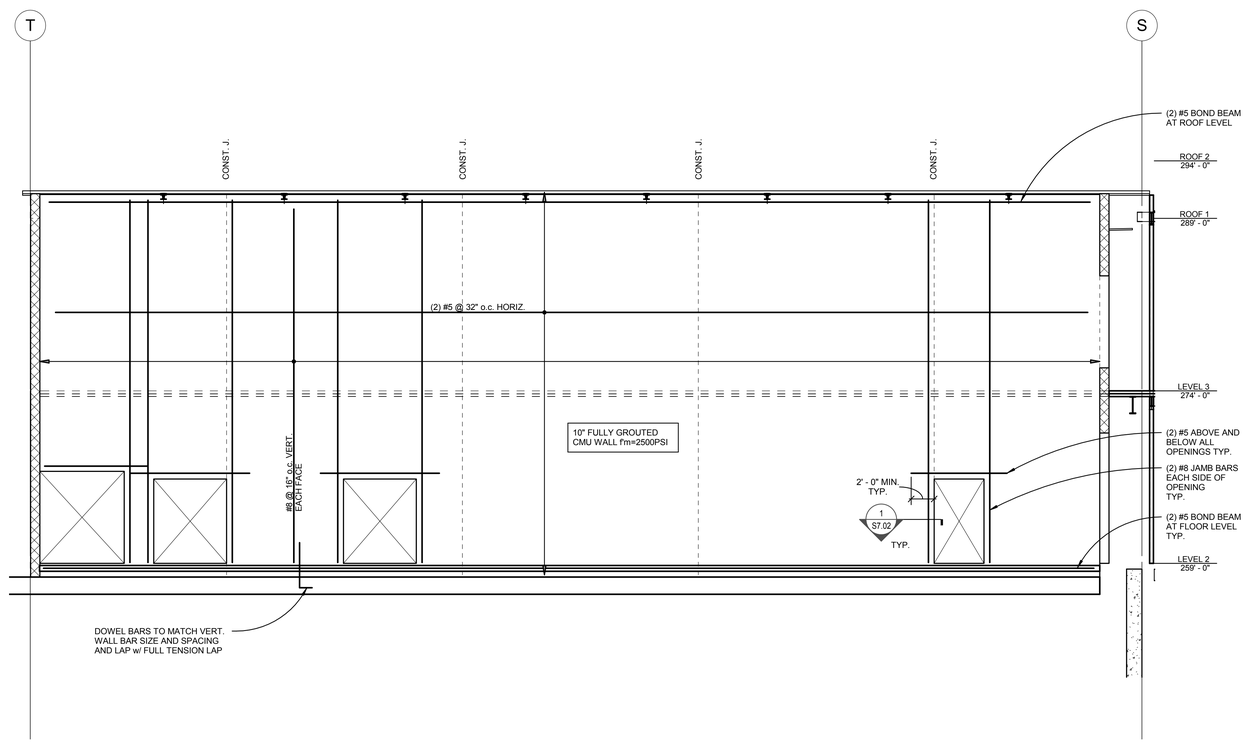

S CMU WALL ELEVATION
3/16" = 1'-0"

BR|IC
ARCHITECTURE, INC.
1233 NW NORTHRUP STREET, SUITE 100
PORTLAND, OR 97209 T 503 595 4900

New Middle School / High School
Seaside School District
1801 S. FRANKLIN STREET, SEASIDE, OREGON 97138
t: 503-738-5591

kpff
111 SW Fifth Ave., Suite 2500
Portland, OR 97204
O: 503.227.3251
F: 503.227.7980
www.kpff.com
10021700078R17

STRUCTURAL REGISTERED PROFESSIONAL ENGINEER 15,773 OREGON JAN 21, 1992 JERALD L. ABDIE
EXPIRES 12-31-19

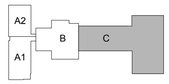

phase	BP2-PERMIT SET
date	6/15/2018
revisions	
project #	17007

CMU WALL ELEVATIONS - SECTOR C

S3.26

6/14/2018 12:10:03 PM
C:\1REVIT\10021700078_Courtney.Bradshaw@kpff.com.rvt

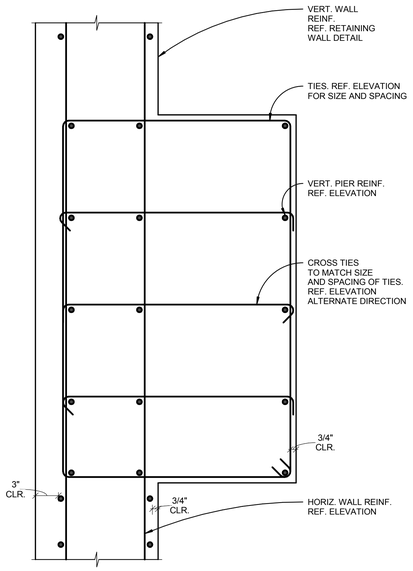

12 PILASTER / WALL REINFORCING
1 1/2" = 1'-0"

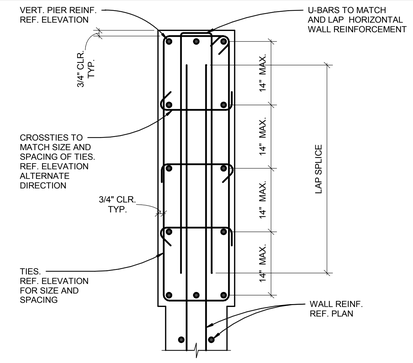

9 BOUNDARY ELEMENT REINFORCING DETAIL
1 1/2" = 1'-0"

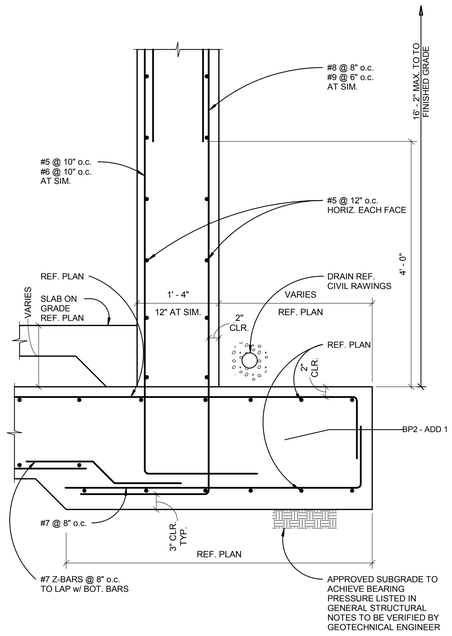

NOTES:
1. SLAB ON GRADE AT BASEMENT SHALL BE POURED PRIOR TO BACKFILL
2. WALL DESIGNED FOR 100 PSF SURCHARGE.

7 RETAINING WALL DETAIL
1" = 1'-0"

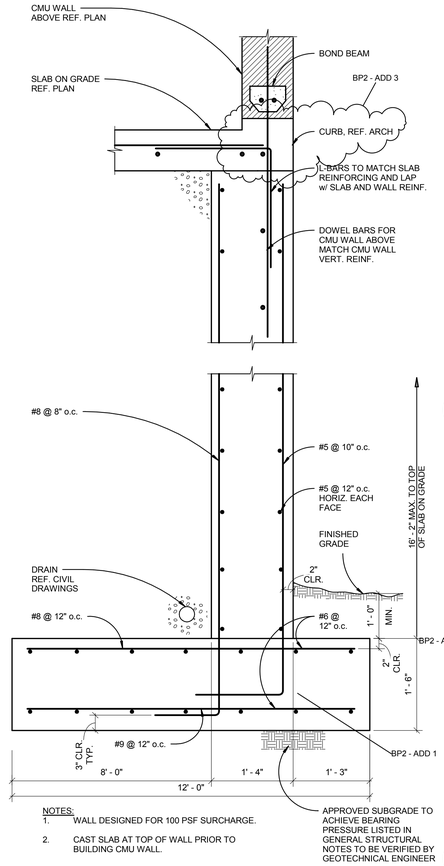

NOTES:
1. WALL DESIGNED FOR 100 PSF SURCHARGE.
2. CAST SLAB AT TOP OF WALL PRIOR TO BUILDING CMU WALL.

5 RETAINING WALL DETAIL MS GYM
1" = 1'-0"

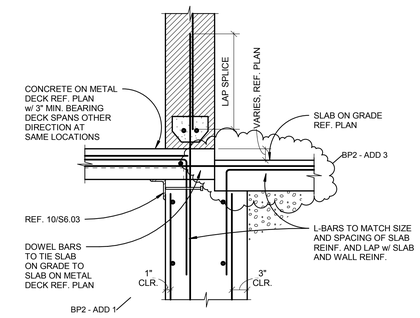

1 TOP OF RETAINING WALL DETAIL
1" = 1'-0"

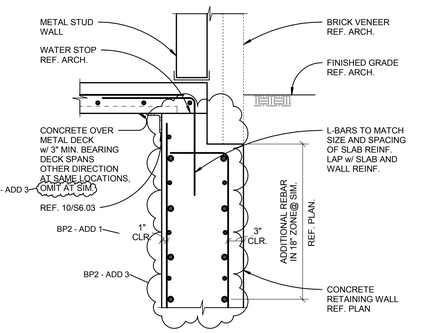

2 TOP OF RETAINING WALL DETAIL
1" = 1'-0"

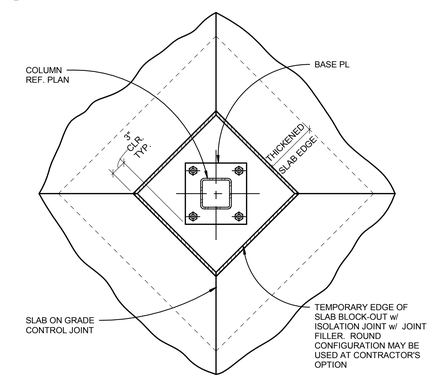

3 ISOLATION JOINT AT COLUMN
1" = 1'-0"

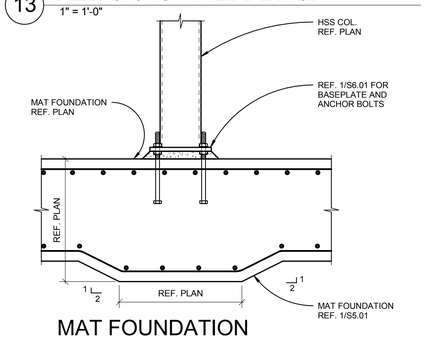

14 MAT FOUNDATION THICKENING AT COLUMN
1" = 1'-0"

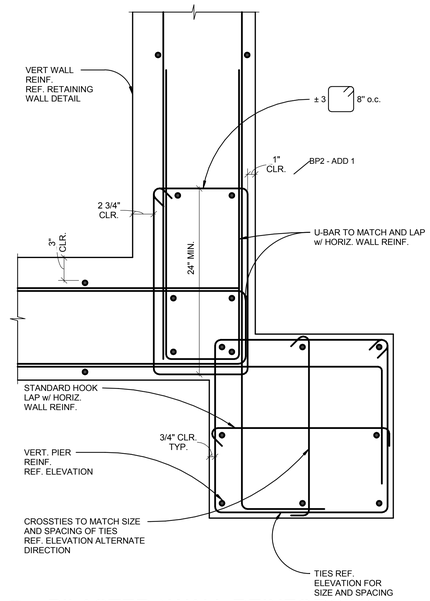

10 PILASTER / WALL REINFORCING
1 1/2" = 1'-0"

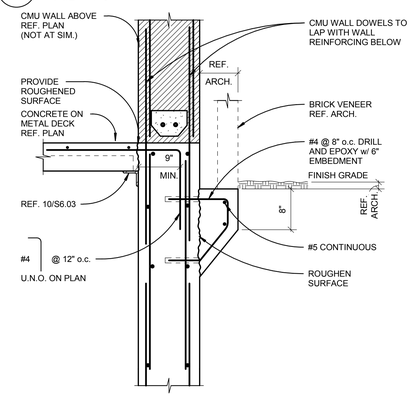

13 RETAINING WALL DETAIL
1" = 1'-0"

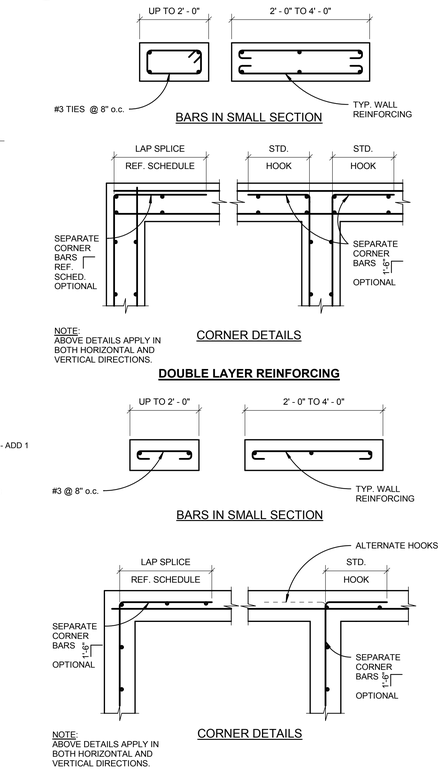

8 WALL DETAILS - REINFORCING
1" = 1'-0"

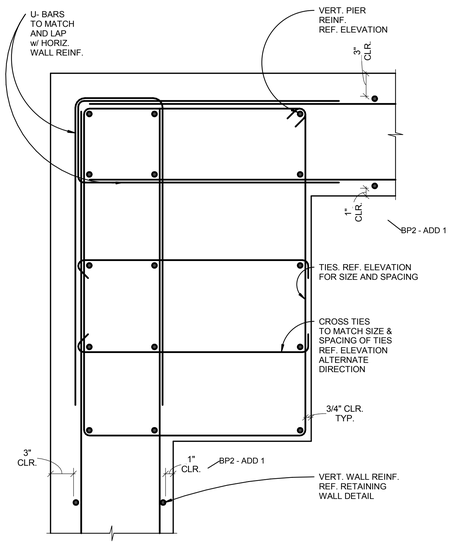

11 PILASTER / WALL REINFORCING
1 1/2" = 1'-0"

NOTES:
1. WALL DESIGNED FOR 100 PSF SURCHARGE.
2. CAST SLAB AT TOP OF WALL PRIOR TO BUILDING CMU WALL.

6 RETAINING WALL DETAIL MS GYM
1" = 1'-0"

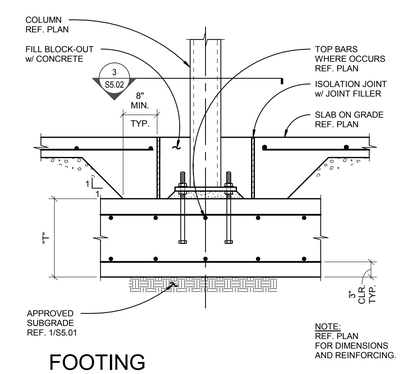

NOTE: REF. PLAN FOR DIMENSIONS AND REINFORCING.

4 FOOTING DETAIL AT STEEL COLUMN
1" = 1'-0"

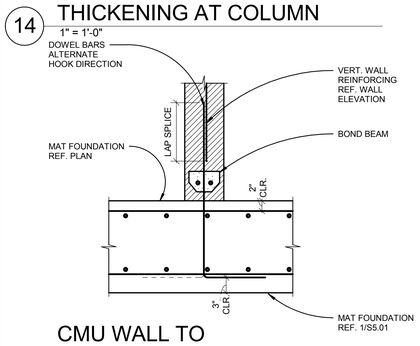

15 CMU WALL TO MAT FOUNDATION DETAIL
1" = 1'-0"

7/16/2018 1:06:47 PM
C:\1REVIT\1002\700078_thong.lam@kpff.com.rvt

BR|IC ARCHITECTURE, INC.
1233 NW NORTHRUP STREET, SUITE 100
PORTLAND, OR 97209 T 503.595.4900

kpff
111 SW Fifth Ave., Suite 2500
Portland, OR 97204
O: 503.227.3251
F: 503.227.7980
www.kpff.com
10021700078R17

REGISTERED PROFESSIONAL ENGINEER 15773 OREGON JUL 21, 1993 GERALD L ABUTE
EXPIRES 12-31-19

New Middle School / High School
Seaside School District
1801 S. FRANKLIN STREET, SEASIDE, OREGON 97138
t: 503-738-5591

phase	BP2-PERMIT SET
date	6/15/2018
revisions	
BP2 - ADD 1	07/05/2018
BP2 - ADD 3	07/13/2018
project #	17007

CONCRETE DETAILS

S5.02

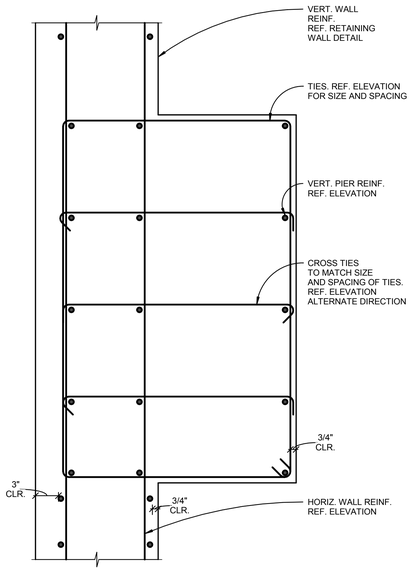

12 PILASTER / WALL REINFORCING
1 1/2" = 1'-0"

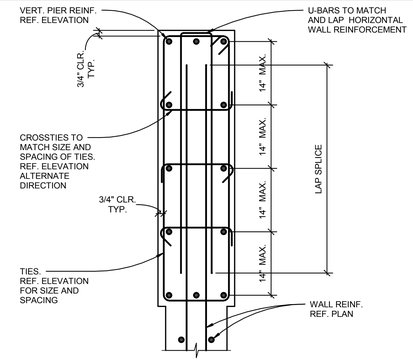

9 BOUNDARY ELEMENT REINFORCING DETAIL
1 1/2" = 1'-0"

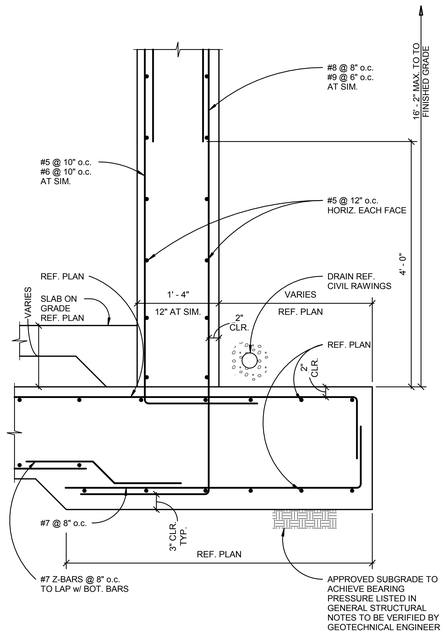

NOTES:
1. SLAB ON GRADE AT BASEMENT SHALL BE POURED PRIOR TO BACKFILL
2. WALL DESIGNED FOR 100 PSF SURCHARGE.

7 RETAINING WALL DETAIL
1" = 1'-0"

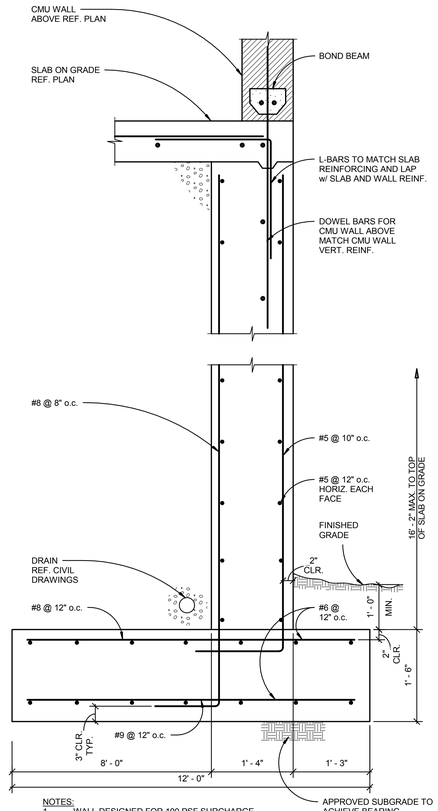

NOTES:
1. WALL DESIGNED FOR 100 PSF SURCHARGE.
2. CAST SLAB AT TOP OF WALL PRIOR TO BUILDING CMU WALL.

5 RETAINING WALL DETAIL MS GYM
1" = 1'-0"

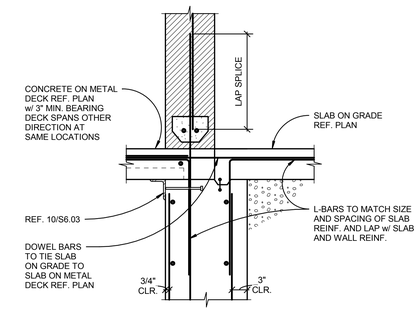

1 TOP OF RETAINING WALL DETAIL
1" = 1'-0"

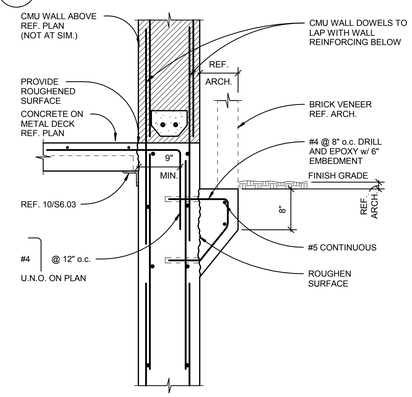

13 RETAINING WALL DETAIL
1" = 1'-0"

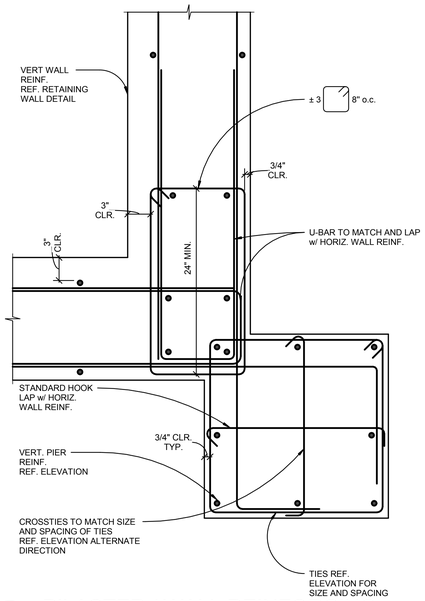

10 PILASTER / WALL REINFORCING
1 1/2" = 1'-0"

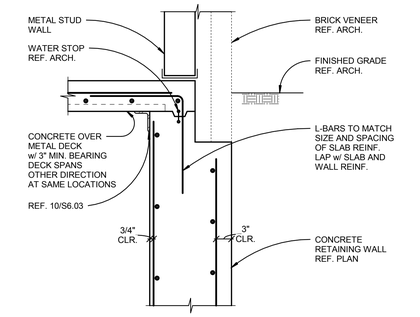

2 TOP OF RETAINING WALL DETAIL
1" = 1'-0"

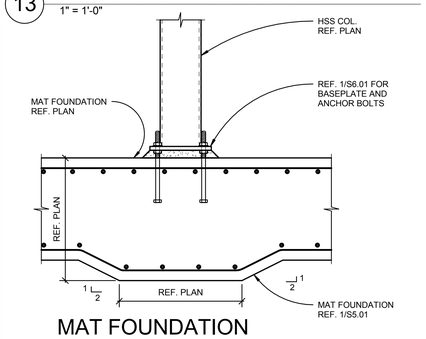

14 MAT FOUNDATION THICKENING AT COLUMN
1" = 1'-0"

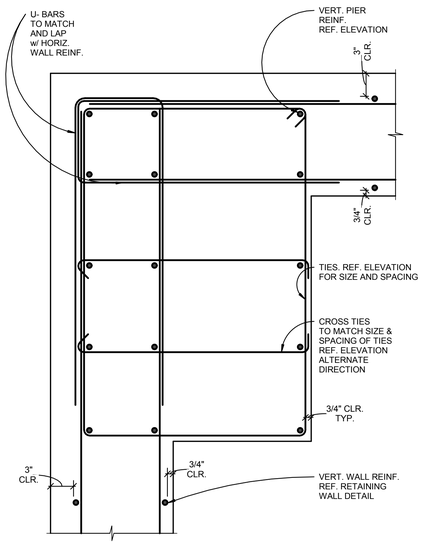

11 PILASTER / WALL REINFORCING
1 1/2" = 1'-0"

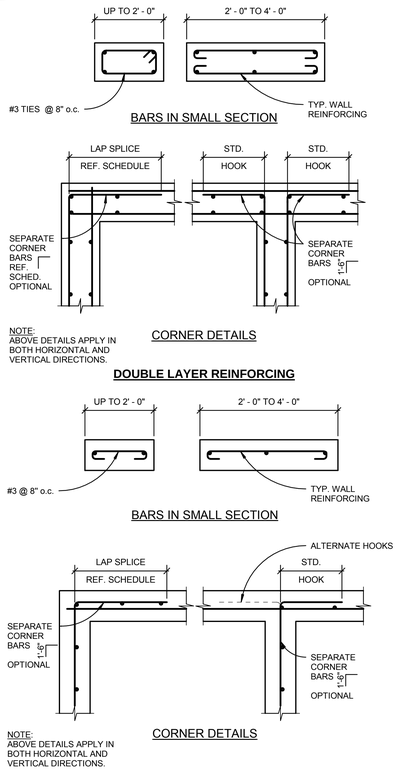

8 WALL DETAILS - REINFORCING
1" = 1'-0"

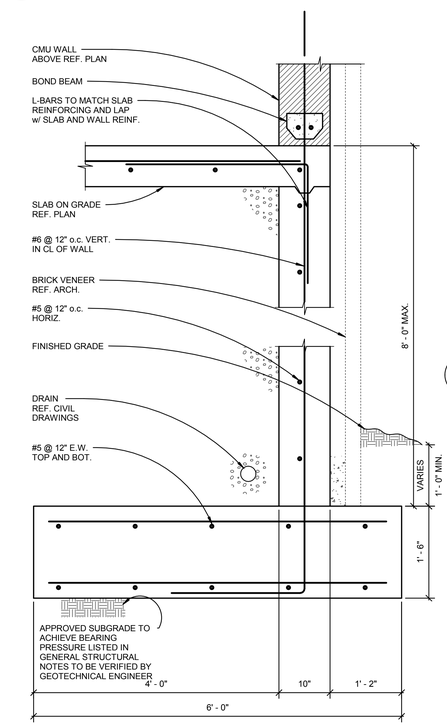

NOTES:
1. WALL DESIGNED FOR 100 PSF SURCHARGE.
2. CAST SLAB AT TOP OF WALL PRIOR TO BUILDING CMU WALL.

6 RETAINING WALL DETAIL MS GYM
1" = 1'-0"

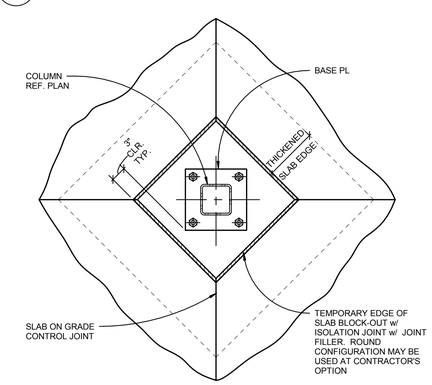

3 ISOLATION JOINT AT COLUMN
1" = 1'-0"

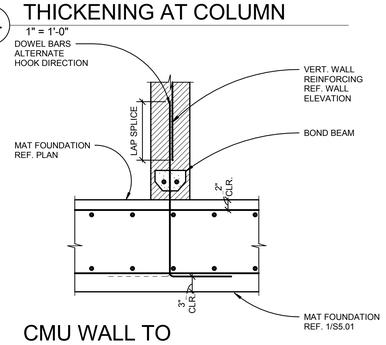

15 CMU WALL TO MAT FOUNDATION DETAIL
1" = 1'-0"

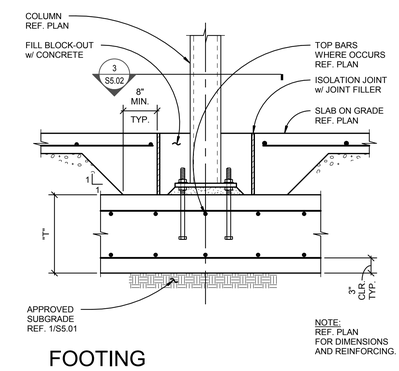

4 FOOTING DETAIL AT STEEL COLUMN
1" = 1'-0"

BR|IC ARCHITECTURE, INC.
1233 NW NORTHRUP STREET, SUITE 100
PORTLAND, OR 97209 T 503 595 4900

kpff
111 SW Fifth Ave., Suite 2500
Portland, OR 97204
O: 503.227.3251
F: 503.227.7980
www.kpff.com
10021700078R17

REGISTERED PROFESSIONAL ENGINEER 15773 OREGON JAN. 21, 1992 GERALD L ABUTE
EXPIRES 12-31-19

New Middle School / High School
Seaside School District
1801 S. FRANKLIN STREET, SEASIDE, OREGON 97138
t: 503-738-5591

phase	BP2-PERMIT SET
date	6/15/2018
revisions	
project #	17007

CONCRETE DETAILS

S5.02

6/14/2018 12:10:11 PM
C:\1REVIT\100217000 78_Courtney.Bradshaw@kpff.com.rvt

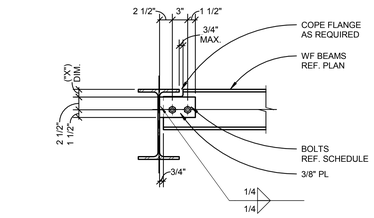

W6 OR W8 BEAM TO BEAM DESIGNATED XD

NOTES:

1. FOR BOLTS REF. 3/S6.01.
2. FOR ("X") DIMENSION REF. DETAIL 4/S6.01.

10 2D BOLTED BEAM TO BEAM CONNECTION

1" = 1'-0"

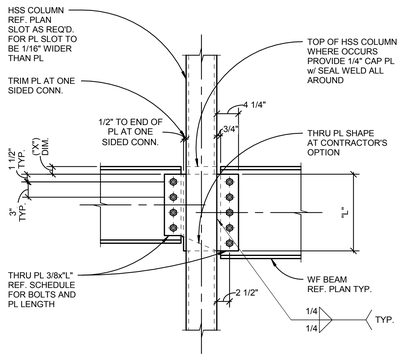

BEAM TO HSS COLUMN DESIGNATED XS

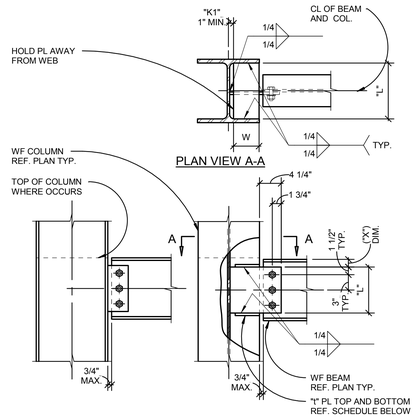

L/W RATIO	"t" PL
< 3	1/2"
≥ 3	3/4"

TYP. BEAM TO COLUMN DESIGNATED X

SINGLE ROW BEARING BOLTED BEAM CONNECTION SCHEDULE			
CONNECTION TYPE	NO. OF 3/4"Ø A325 BOLTS	PL LENGTH "L"	HOLE SIZE
2D	2	REFERENCE DETAIL 10/S6.01	
2 2F	2	6"	STANDARD HOLE
3 3F	3	9"	STANDARD HOLE
4 4F	4	12"	STANDARD HOLE
5 5F	5	15"	STANDARD HOLE
6 6F	6	18"	STANDARD HOLE
7 7F	7	21"	STANDARD HOLE
8 8F	8	24"	HORIZONTAL SHORT SLOTTED HOLE IN PL
9 9F	9	27"	HORIZONTAL SHORT SLOTTED HOLE IN PL
10 10F	10	30"	HORIZONTAL SHORT SLOTTED HOLE IN PL

NOTES:

1. X INDICATES BEARING TYPE CONNECTION WITH THREADS INCLUDED IN SHEAR PLANE (A325N).
2. XF INDICATES SLIP CRITICAL CONNECTION (A325SC).

3 SINGLE ROW BEARING BOLTED BEAM CONNECTION SCHEDULE

1" = 1'-0"

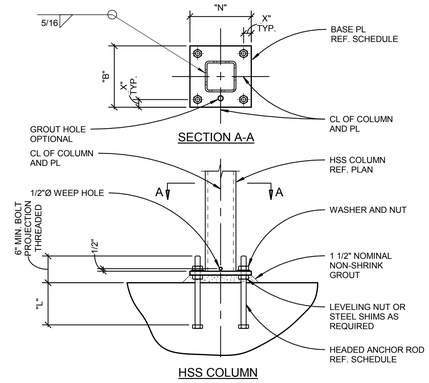

HSS COLUMN

TYP. GRAVITY COLUMN BASE PL SCHEDULE						
COLUMN SIZE	N (IN.)	B (IN.)	T (IN.)	X (IN.)	L (IN.)	ANCHOR RODS (NO.) DIAMETER
HSS4x4	10	10	3/4	1 1/2	9	(4) 7/8"
HSS5x5	11	11	3/4	1 1/2	9	(4) 7/8"
HSS6x6	12	12	1	1 1/2	9	(4) 7/8"
HSS8x8	14	14	1 1/4	1 1/2	9	(4) 7/8"
W10x49	16	16	1 1/4	1 1/2	15	(4) 7/8"
W10x60	16	16	1 1/4	1 1/2	15	(4) 7/8"

NOTES:

1. ANCHOR RODS SHALL BE HEADED ASTM F1554 GRADE 36 U.N.O. THREADED ROD MAY BE USED AT CONTRACTOR'S OPTION PROVIDED THAT NUT IS TACK WELDED TO ROD.
2. ANCHOR ROD HOLE DIAMETERS (dh) SHALL BE AS FOLLOWS:
   db ≤ 1" : dh = db + 5/16"
   1" < db ≤ 2" : dh = db + 1/2"
   db > 2" : dh = db + 1"
3. PROVIDE MILL FINISH AT BOTTOM OF COLUMN AND TOP OF BASE PL
4. ACCEPTABLE TO SLOT HOLES RADIALLY TO ALLOW FOR CONSTRUCTION TOLERANCE PLATE WASHER REQUIRED REF. NOTES.
5. SQUARE OR CIRCULAR PL WASHERS SHALL BE USED (ASTM A36) WHERE HOLES ARE SLOTTED OR OVERSIZED. MINIMUM WASHER SIZES SHALL BE IN ACCORDANCE WITH AISC TABLE 14-2.

1 TYP. GRAVITY COLUMN BASE PLATE DETAIL

1" = 1'-0"

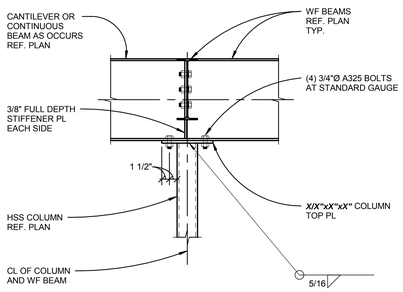

BEAM FLANGE
bf ≥ 5 1/2"

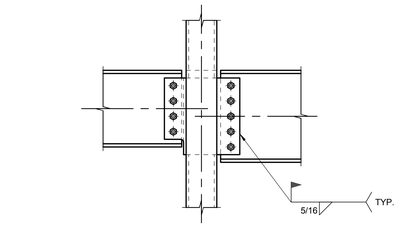

WELDED BEAM TO HSS COLUMN SHEAR PL - DESIGNATED XW

NOTES:

1. FOR INFORMATION NOT SHOWN XW REF. CONDITION XS.
2. FOR PL LENGTH ("L") AND BOLTS REF. SCHEDULE 3/S6.01.
3. FOR ("X") DIMENSION REF. DETAIL 4/S6.01.

8 BOLTED THRU PL AT WF BEAM TO HSS COLUMN

1" = 1'-0"

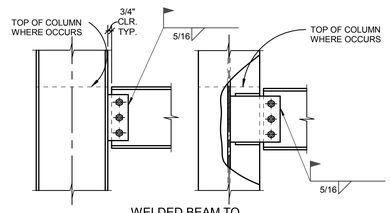

WELDED BEAM TO COLUMN SHEAR PL - DESIGNATED XW

NOTES:

1. FOR INFORMATION NOT SHOWN REF. TYP. BEAM TO COLUMN DETAIL.
2. FOR PL LENGTH ("L") AND BOLTS REF. SCHEDULE 3/S6.01. FOR WELDS NOT SHOWN, PL THICKNESS, AND ("X") DIMENSION REF. DETAIL 4/S6.01.
3. FOR WELDS AT SKEWED CONNECTIONS REF. 9/S6.01.

5 TYP. BOLTED WF BEAM TO WF COLUMN DETAILS

1" = 1'-0"

K	"X"
K ≤ 1 1/2"	1 1/2"
1 1/2" < K ≤ 2"	2"
2" < K ≤ 3"	3"
K ≥ 3"	K

NOTE:
K REPRESENTS THE LARGER K DIMENSION OF THE TWO CONNECTION BEAMS

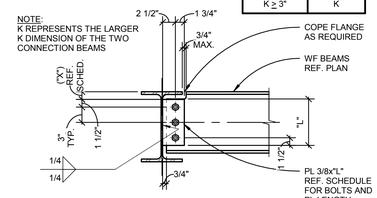

TYP. BEAM TO BEAM DESIGNATED X

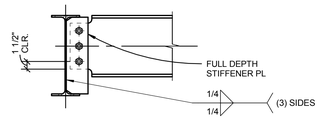

FULL DEPTH SHEAR PL DESIGNATED XS

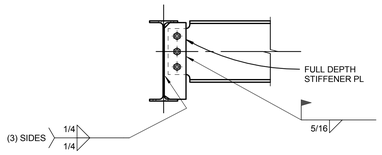

FULL DEPTH WELDED SHEAR PL DESIGNATED XW

NOTES:

1. FOR SCHEDULE REF. 3/S6.01.
2. FOR INFORMATION NOT SHOWN ON XS AND XW REFERENCE CONDITION X .
3. FOR WELDS AT SKEWED CONNECTIONS REF. 9/S6.01.

4 TYP. BOLTED BEAM TO BEAM CONNECTION

1" = 1'-0"

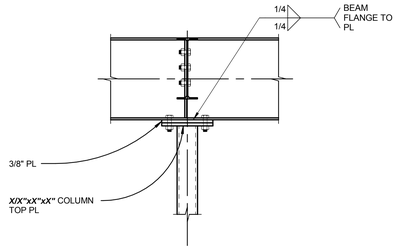

BEAM FLANGE
bf < 5 1/2"

NOTES:

1. FOR STIFFENER PL INFORMATION REF. 4/S6.01.
2. FOR INFORMATION NOT SHOWN ON BEAM FLANGE < 5 1/2" REF. CONDITION BEAM FLANGE > 5 1/2".

11 TYP. BEAM OVER COLUMN DETAIL

1" = 1'-0"

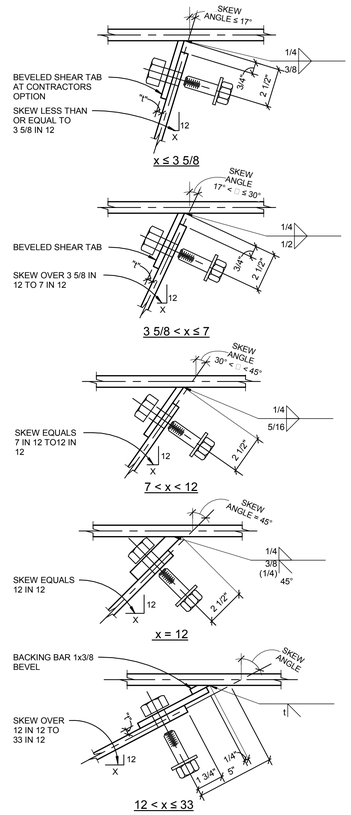

9 TYP. SKEWED SHEAR PL WELDS

3" = 1'-0"

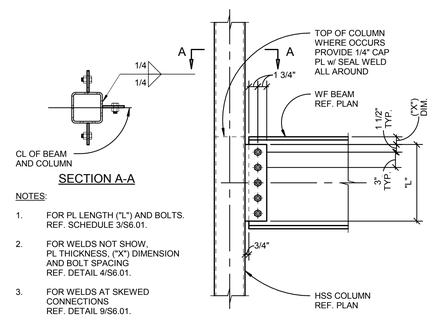

NOTES:

1. FOR PL LENGTH ("L") AND BOLTS. REF. SCHEDULE 3/S6.01.
2. FOR WELDS NOT SHOW, PL THICKNESS, ("X") DIMENSION AND BOLT SPACING REF. DETAIL 4/S6.01.
3. FOR WELDS AT SKEWED CONNECTIONS REF. DETAIL 9/S6.01.

6 TYP. BOLTED WF BEAM TO HSS COLUMN AT MULTIPLE SIDED CONNECTIONS - DESIGNATED X

1" = 1'-0"

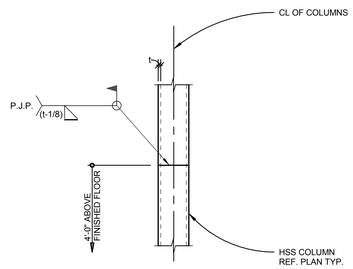

SAME SIZE

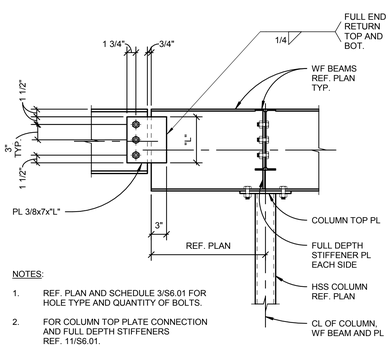

NOTES:

1. REF. PLAN AND SCHEDULE 3/S6.01 FOR HOLE TYPE AND QUANTITY OF BOLTS.
2. FOR COLUMN TOP PLATE CONNECTION AND FULL DEPTH STIFFENERS REF. 11/S6.01.

7 TYP. BEAM SPLICE DETAIL AT COLUMN

1" = 1'-0"

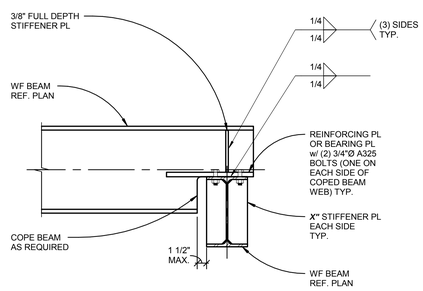

12 BEAM SEAT CONNECTION

1" = 1'-0"

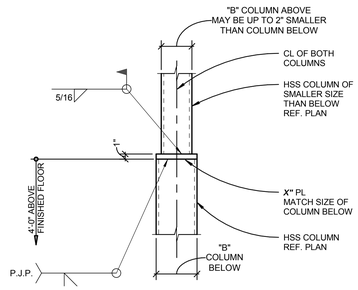

2 TYP. HSS STEPPED SIZE TO HSS GRAVITY COLUMN SPLICE

1" = 1'-0"

BR|IC ARCHITECTURE, INC.
1233 NW NORTHRUP STREET, SUITE 100
PORTLAND, OR 97209 T 503 595 4900

kpff
111 SW Fifth Ave., Suite 2500
Portland, OR 97204
O: 503.227.3251
F: 503.227.7980
www.kpff.com
10021700078R17

New Middle School / High School
Seaside School District
1801 S. FRANKLIN STREET, SEASIDE, OREGON 97138
t: 503-738-5591

phase	BP2-PERMIT SET
date	6/15/2018
revisions	
project #	17007

STEEL DETAILS

S6.01

6/14/2018 12:13:15 PM
C:\LREVIT\10021700078_Courtney.Bradshaw@kpff.com.rvt

BEAM PENETRATION								
MARK	TYPE	"H"	"W"	"e"	REINF. PLATE			WELD
					"L"	WIDTH	THICKNESS	"t"
1	U				-	-	-	-
2	U				-	-	-	-
3	R							
3	R							
4	R							
5	R							

NOTES:

1. U INDICATES UNREINFORCED BEAM PENETRATION REF. 5/S6.02.
2. R INDICATES REINFORCED BEAM PENETRATION REF. 6/S6.02.

7 BEAM PENETRATION - SCHEDULE
1" = 1'-0"

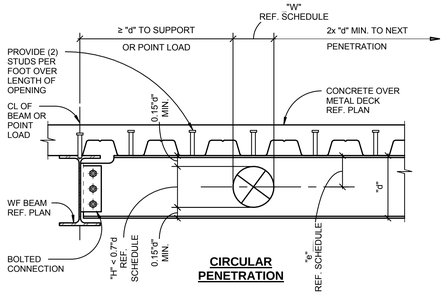

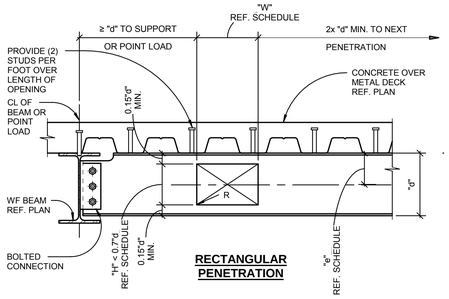

NOTES:

1. REF. PLANS FOR SIZES AND LOCATIONS OF PENETRATIONS CONTRACTOR TO VERIFY.
2. ALL PENETRATION SHALL BE IN SHOP DRAWINGS AND REVIEWED BY THE ENGINEER. NO PENETRATIONS SHALL BE MADE WITHOUT APPROVAL FROM ENGINEER.
3. R = 2x WEB THICKNESS OR 5/8" WHICHEVER IS GREATER.
4. FOR BEAM PENETRATION SCHEDULE REF. 7/S6.02.
5. FOR BOLTED CONNECTION REF. 4/S6.01.

5 BEAM PENETRATION - UNREINFORCED
1" = 1'-0"

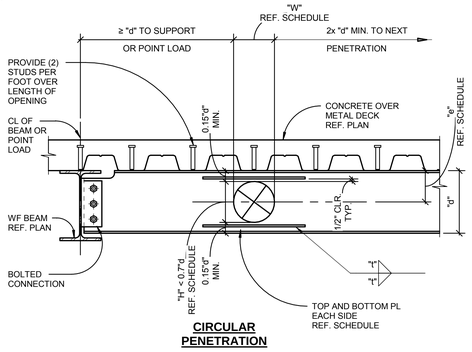

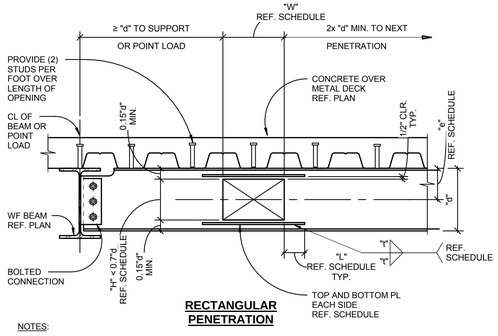

NOTES:

1. REF. PLANS FOR SIZES AND LOCATIONS OF PENETRATIONS CONTRACTOR TO VERIFY.
2. ALL PENETRATION SHALL BE IN SHOP DRAWINGS AND REVIEWED BY THE ENGINEER. NO PENETRATIONS SHALL BE MADE WITHOUT APPROVAL FROM ENGINEER.
3. R = 2x WEB THICKNESS OR 5/8" WHICHEVER IS GREATER.
4. FOR BEAM PENETRATION SCHEDULE REF. 7/S6.02.
5. FOR BOLTED CONNECTION REF. 4/S6.01.

6 BEAM PENETRATION - REINFORCED
1" = 1'-0"

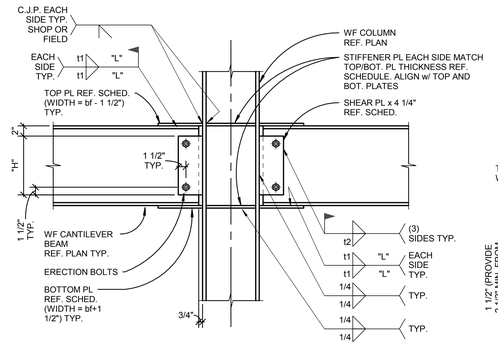

TYPICAL

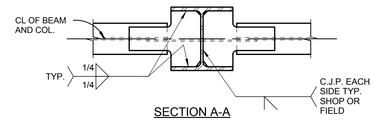

SECTION A-A

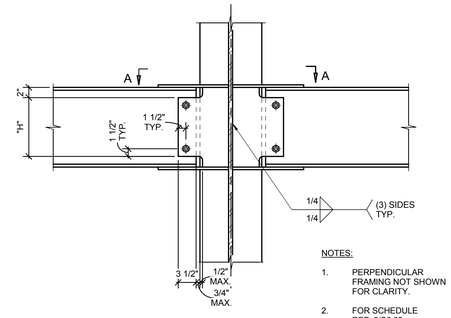

AT COLUMN WEB

NOTES:

1. PERPENDICULAR FRAMING NOT SHOWN FOR CLARITY.
2. FOR SCHEDULE REF. 2/S6.02.
3. FOR INFORMATION NOT SHOWN REF. TYPICAL DETAIL.

3 TYP. BEAM TO COLUMN MOMENT CONNECTION
1" = 1'-0"

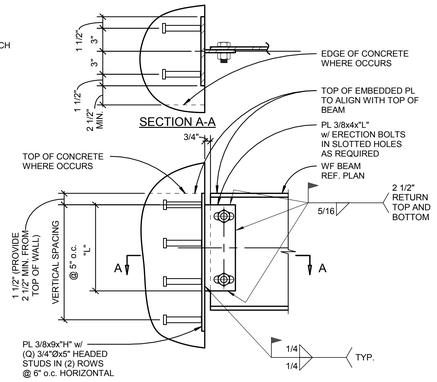

TYP. SINGLE SHEAR PL AT CONCRETE WALL SCHEDULE			
CONNECTION TYPE	LENGTH "L"	EMBEDDED PL LENGTH "H"	NO. OF STUDS "Q"
2C	6"	11"	4
3C	9"	14"	6
4C	12"	18"	8
5C	15"	23"	10
6C	18"	28"	12
7C	21"	33"	14
8C	24"	38"	16
9C	27"	43"	18
10C	30"	46"	20

NOTE:
ALLOWABLE SHEAR PLATE TOLERANCE: ±1.5" VERTICAL AND 2" HORIZONTAL OFF PLATE CENTERLINE. CONTRACTOR TO INFORM ENGINEER WHEN SHEAR PLATE EXCEEDS ALLOWABLE TOLERANCES.

1 TYP. SINGLE SHEAR PLATE CONNECTION AT CONCRETE WALL
1 1/2" = 1'-0"

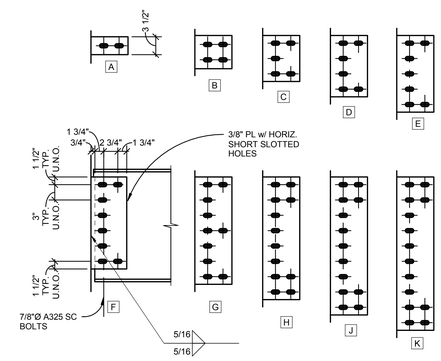

DOUBLE ROW SINGLE SHEAR PL CONNECTION SCHEDULE					
CONNECTION TYPE	BOLTS		PL LENGTH "L"	MIN. WEB "t" IF TOP FLANGE COPED	MIN. WEB "t" IF TOP AND BOTTOM FLANGE COPED
	1ST ROW	2ND ROW			
A	1	1	3 1/2"	.173	.202
B	2	2	6"	.187	.218
C	3	2	9"	-	.195
D	4	2	12"	-	-
E	5	2	15"	-	-
F	6	2	18"	-	-
G	7	3	21"	-	-
H	8	4	24"	-	-
J	9	4	27"	-	-
K	10	4	30"	-	-

NOTE:
✳ CAPACITY IS REDUCED BY FACTOR t/wt MIN. FOR tw < MIN. WEB t

4 DOUBLE ROW SINGLE SHEAR PL CONNECTION
1" = 1'-0"

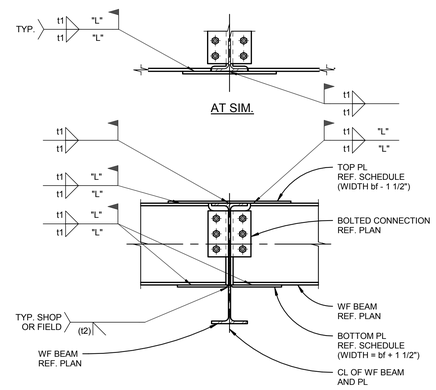

TYP. BEAM TO BEAM MOMENT CONNECTION SCHEDULE						
BEAM SIZE	BOLTED CONNECTION TYPE	TOP PL THICKNESS x WIDTH	BOTTOM PL THICKNESS x WIDTH	WELD t1		WELD t2
				THICKNESS	LENGTH "L"	

2 TYP. BEAM TO BEAM MOMENT CONNECTION
1" = 1'-0"

BR|IC ARCHITECTURE, INC.
1233 NW NORTHRUP STREET, SUITE 100
PORTLAND, OR 97209 T 503 595 4900

New Middle School / High School
Seaside School District
1801 S. FRANKLIN STREET, SEASIDE, OREGON 97138
t: 503-738-5591

kpff
111 SW Fifth Ave., Suite 2500
Portland, OR 97204
O: 503.227.3251
F: 503.227.7980
www.kpff.com
10021700078R17

phase: BP2-PERMIT SET
date: 6/15/2018
revisions
project #: 17007

STEEL DETAILS

S6.02

6/14/2018 12:13:19 PM
C:\LREVIT\10021700078_Courtney.Bradshaw@kpff.com.rvt

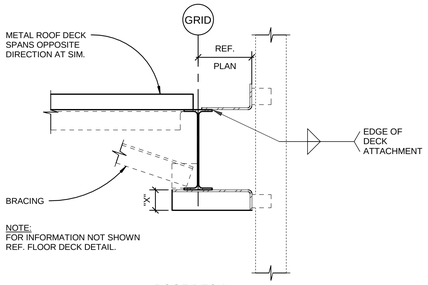

NOTE:
FOR INFORMATION NOT SHOWN REF. FLOOR DECK DETAIL.

ROOF DECK

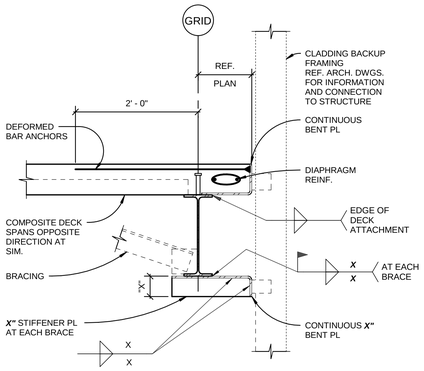

FLOOR DECK

NOTES:

1. FOR FLOOR EDGE OF DECK DETAIL REF. 2/S6.03.
2. FOR ROOF EDGE OF DECK DETAIL REF. 3/S6.03.
3. FOR BENT PL AT COLUMN REF. 8/S6.03.
4. FOR BRACING DETAIL REF. 1/S6.05.

11 TYP. DECK EDGE w/ CLADDING SUPPORT
1" = 1'-0"

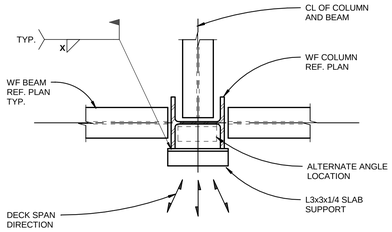

NOTES:

1. SLAB SUPPORT ANGLES ARE REQUIRED AT ALL COLUMN LOCATIONS WHERE THERE IS NO BEAM OR OTHER SUPPORT FOR SLAB AT COLUMN PENETRATION.
2. IN ADDITIONTO PERMANENET SLAB SUPPORT ANGLES, THE CONTRACTOR SHALL PROVIDE MISCELLANEOUS DECK SUPPORTS AT OTHER LOCATIONS REQUIRED TO MAINTAIN DECK LEVEL UNTIL CONCRETE CURES.
3. OTHER CONFIGURATIONS REQUIRING SLAB SUPPORT ANGLES INCLUDE, BUT ARE NOT LINIMITED TO, THE FOLLOWING:

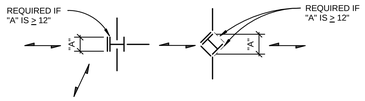

9 SLAB SUPPORT AT COLUMN
1" = 1'-0"

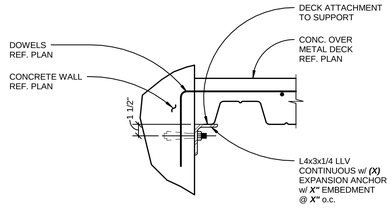

POST-INSTALLED ANCHOR

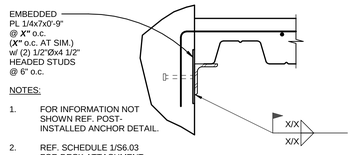

NOTES:

1. FOR INFORMATION NOT SHOWN REF. POST-INSTALLED ANCHOR DETAIL.
2. REF. SCHEDULE 1/S6.03 FOR DECK ATTACHMENT.

EMBEDMENT

10 DECKING LEDGER SUPPORT ANGLE
1 1/2" = 1'-0"

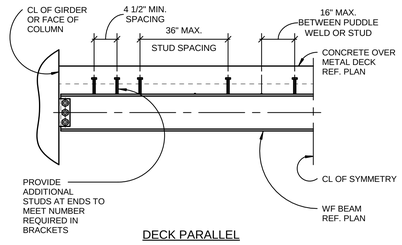

DECK PARALLEL

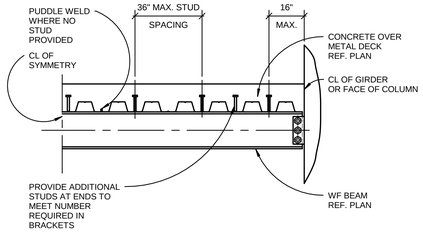

DECK PERPENDICULAR

NOTES:

1. THE MINIMUM NUMBER OF STUDS REQUIRED IS SHOWN AS [X] ON THE FRAMING PLANS. [X-Y-Z] INDICATES NUMBER OF STUDS ON A GIRDER BETWEEN BEAM CONNECTION POINTS. NO STUDS ARE REQUIRED WHERE NO DESIGNATION IS GIVEN. ADDITIONAL STUDS MAY BE REQUIRED TO MEET THE ABOVE MAXIMUM SPACING REQUIREMENTS.
2. IF MULTIPLE STUDS ARE REQUIRED IN ONE FLUTE, THE TRANSVERSE SPACING SHALL BE 3" MINIMUM.

7 TYP. COMPOSITE BEAM STUD SPACING DETAIL
1" = 1'-0"

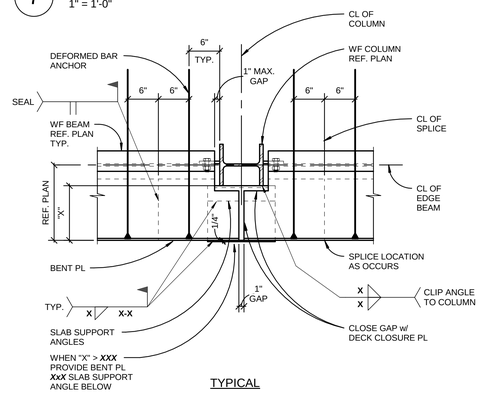

TYPICAL

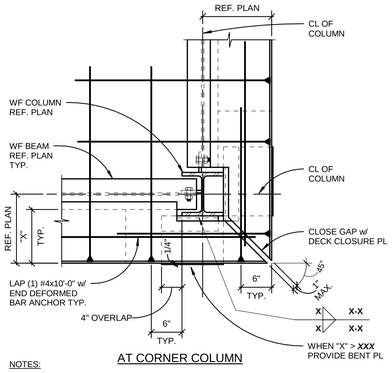

AT CORNER COLUMN

NOTES:

1. FOR INFORMATION NOT SHOWN AT CORNER COLUMN REF. TYPICAL DETAIL.
2. FOR FLOOR EDGE OF DECK DETAIL REF. 2/S6.03.
3. FOR ROOF DECK OF DECK EDGE DETAIL REF. 3/S6.03.
4. FOR SLAB SUPPORT ANGLE DETAIL REF. 9/S6.03.

8 DECK EDGE DETAIL AT COLUMN
1" = 1'-0"

FLOOR AND ROOF DECK SCHEDULE							
DECK DESIGNATION	DECK TYPE	CONC. TOPPING THICKNESS	CONCRETE TOPPING STRENGTH	SLAB REINFORCING	CONNECTIONS		
					AT SUPPORT MEMBERS	AT PARALLEL MEMBERS	AT SIDE LAPS
D-1	3"-18 GA.	3"	3000	#4 @ 12" o.c. EACH WAY	NOTE 3	NOTE 3	
D-2	1 1/2"-18 GA.	-	-	-			
D-3A	3"-16 GA.	-	-	-			
D-X							

NOTES:

1. REF. GENERAL STRUCTURAL NOTES FOR BASIS OF DESIGN DECK PROPERTIES.
2. REF. GENERAL STRUCTURAL NOTES FOR CONCRETE STRENGTH AT FLOOR DECK.
3. WELDED HEADED STUDS PER DRAWINGS MAY BE PROVIDED IN LIEU OF DECK WELDS INDICATED.

1 FLOOR AND ROOF DECK SCHEDULE
1" = 1'-0"

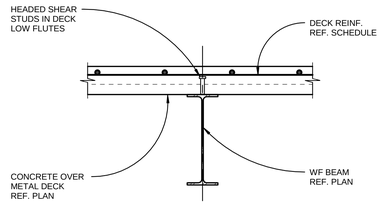

DECK PERPENDICULAR

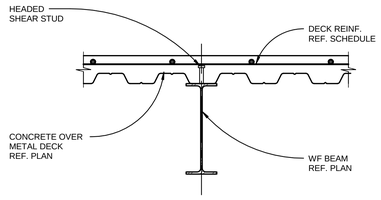

DECK PARALLEL (CENTERED)

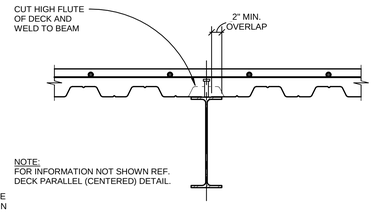

NOTE:
FOR INFORMATION NOT SHOWN REF. DECK PARALLEL (CENTERED) DETAIL.

DECK PARALLEL (OFF-CENTER)

NOTE:
REF. SCHEDULE 1/S6.03 FOR DECK ATTACHMENT AND SLAB REINFORCING.

5 TYP. FLOOR DECK TO BEAM DETAIL
1" = 1'-0"

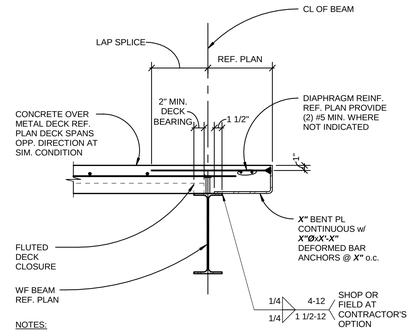

NOTES:

1. REF. GENERAL STRUCTURAL NOTES FOR LAP SPLICE LENGTH.
2. REF. SCHEDULE 1/S6.03 FOR DECK ATTACHMENT.

2 TYP. EDGE OF DECK DETAIL
1" = 1'-0"

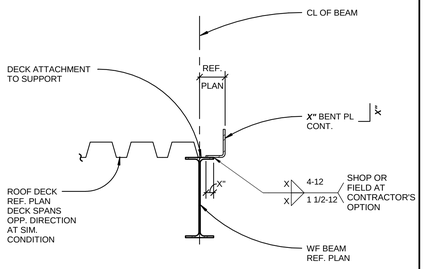

NOTE:
REF. SCHEDULE 1/S6.03 FOR DECK ATTACHMENT.

3 TYP. EDGE OF ROOF DECK DETAIL
1" = 1'-0"

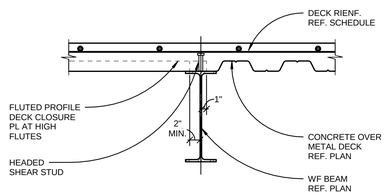

NOTE:
REF. SCHEDULE 1/S6.03 FOR DECK ATTACHMENT AND SLAB REINFORCING.

6 DETAIL AT DECK DISCONTINUITY
1" = 1'-0"

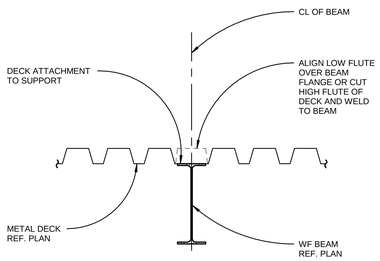

NOTE:
REF. SCHEDULE 1/S6.03 FOR DECK ATTACHMENT.

4 TYP. ROOF DECK TO BEAM DETAIL
1" = 1'-0"

BR|IC ARCHITECTURE, INC.
1233 NW NORTHRUP STREET, SUITE 100
PORTLAND, OR 97209 T 503 595 4900

New Middle School / High School
Seaside School District
1801 S. FRANKLIN STREET, SEASIDE, OREGON 97138
t: 503-738-5591

kpff
111 SW Fifth Ave., Suite 2500
Portland, OR 97204
O: 503.227.3251
F: 503.227.7980
www.kpff.com
10021700078R17

phase	BP2-PERMIT SET
date	6/15/2018
revisions	
project #	17007

STEEL DETAILS

S6.03

6/14/2018 12:13:23 PM
C:\1REVIT\10021700078_Courtney.Bradshaw@kpff.com.rvt

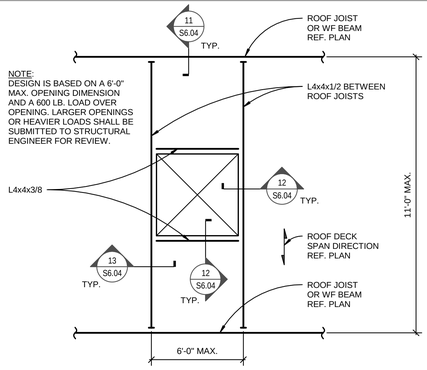

NOTE:
DESIGN IS BASED ON A 6'-0" MAX. OPENING DIMENSION AND A 600 LB. LOAD OVER OPENING. LARGER OPENINGS OR HEAVIER LOADS SHALL BE SUBMITTED TO STRUCTURAL ENGINEER FOR REVIEW.

10 TYP. FRAMING AT ROOF DECK OPENING
1" = 1'-0"

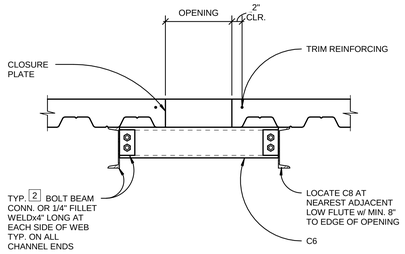

NOTE:
WHEN THE MAXIMUM DIMENSION OF AN OPENING GROUP EXCEEDS 48" NOTIFY ENGINEER FOR DESIGN.

SECTION A-A

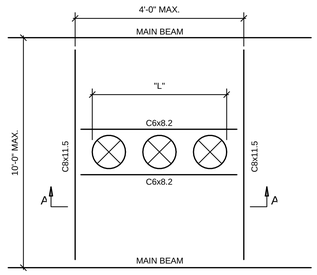

NOTES:

1. FOR TRIM REINFORCING REF. 3/S6.04.
2. FOR CLOSURE PLATE REF. 1/S6.04.
3. IF "L" <24 CONSIDER THE COMBINED HOLES AS ONE AND STRENGTHEN REF. 4/S6.04.
4. AT (E) FLOOR DECKS FASTEN CHANNEL FLANGES w/ 3/8"Øx2 1/2" EMBEDMENT ANCHORS @ 24" o.c. TYP.

PARTIAL FRAMING PLAN

8 COMPOSITE DECK REINFORCING AT 48" MAX. FORMED OPENINGS
1" = 1'-0"

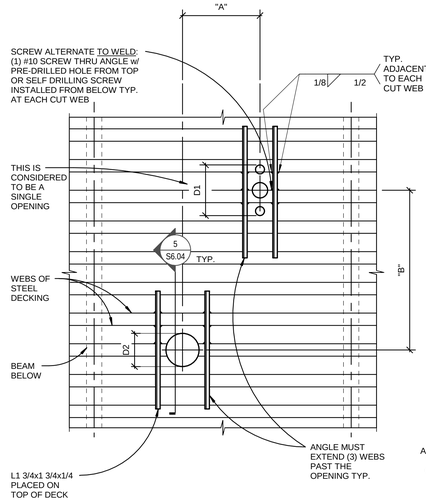

NOTES:

1. HOLES 6"Ø AND LESS LOCATED AT RANDOM OR 13"Ø AND LESS CENTERED ON DECK LOW FLUTES DO NOT REQUIRE REINFORCING. REF. 2/S6.04
2. PRIOR TO CONCRETE POUR, OPENINGS SHALL BE BLOCKED OUT w/ DECK LEFT INTACT. AFTER CONCRETE HAS CURED THE BLOCK OUT MAY BE REMOVED AND THE DECK CUT OUT TO THE EDGE OF THE CONCRETE POUR.
3. THE CONTRACTOR SHALL REINFORCE OR SHORE THE DECK AS REQUIRED TO SUPPORT LOADS DURING CONCRETE PLACEMENT.
4. IF DIMENSION "A" IS GREATER THAN 4D1, 4D2 OR 32" WHICHEVER IS LARGER THEN THERE IS NO RESTRICTION ON DIMENSION "B".
5. IF DIMENSION "B" IS GREATER THAN 4D1, 4D2 OR 32" WHICHEVER IS LARGER THEN THERE IS NO RESTRICTION ON DIMENSION "A".
6. IF DIMENSION "A" AND "B" ARE LESS THAN 4D1, 4D2 OR 32" WHICHEVER IS LARGER, THE OPENING GROUP WILL BE CONSIDERED AS A SINGLE HOLE, AND MUST BE REINFORCED AS REQUIRED FOR THE LARGER OPENING.

6 COMPOSITE DECK REINFORCING AT PENETRATIONS < 13" DIA OR LESS
1" = 1'-0"

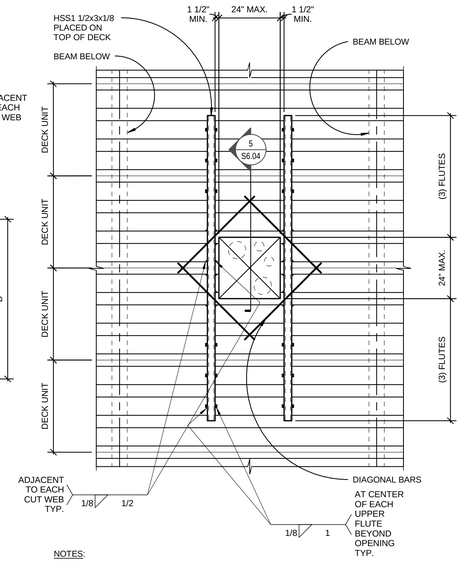

NOTES:

1. REF. 6/S6.04 FOR DIMENSION REQUIREMENTS WHERE ADJACENT HOLES MUST BE CONSIDERED AS ONE OPENING.
2. IF THE OPENING OR GROUP OF OPENINGS OCCURS IN ONE DECKING UNIT, THE OPENING OR OPENING GROUP MAY BE CUT PRIOR TO POURING OF CONCRETE.
3. IF, AS SHOWN IN THE DETAIL ABOVE, THE OPENING OR OPENING GROUP CUTS THROUGH TWO DECK UNITS, THE DECKING SHALL NOT BE CUT UNTIL CONCRETE HAS BEEN PLACED AND CURED.
   a. AT THE TIME OF POURING, SUITABLE SLEEVES OR BULKHEADS SHALL BE PLACED AROUND THE OPENING.
4. WHEN THE MAXIMUM DIMENSION OF AN OPENING OR OPENING GROUP EXCEEDS 24", PLACE HEADER BEAMS AROUND OPENING, NOTIFY ENGINEER FOR DESIGN.
5. FOR DIAGONAL BAR REINFORCING REF. 3/S6.04.
6. FOR OPENING LARGER THAN THOSE SHOWN REF. 8/S6.04 FOR DECK REINFORCING REQUIREMENTS U.N.O.

4 COMPOSITE DECK REINFORCING AT PENETRATIONS > 13" DIA
1" = 1'-0"

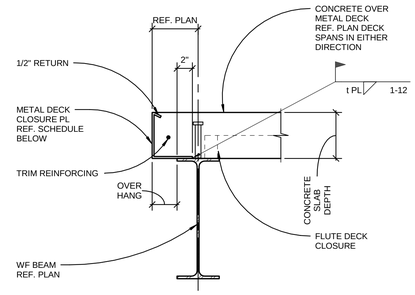

NOTES:

1. WHERE CLADDING, GUARDRAIL, ELEVATOR RAILS OR OTHER ATTACHMENT AT SLAB EDGE OCCUR. REF. TYP. EDGE OF DECK DETAIL 2/S6.03 U.N.O.
2. FOR TRIM REINFORCING REF. 3/S6.04.

EDGE FORM GAUGE			
SLAB DEPTH (IN.)	OVERHANG (IN.)		
	≤4	≤8	≤10
≤5 1/2	16	10	10
≤6 1/2	14	10	-
≤7 1/2	14	10	-

1 EDGE OF DECK DETAIL
1 1/2" = 1'-0"

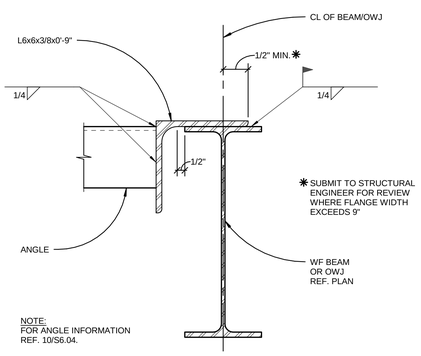

NOTE:
FOR ANGLE INFORMATION REF. 10/S6.04.

11 TYP. FRAMING AT ROOF DECK OPENING
3" = 1'-0"

OPENINGS WITHOUT REINFORCING:

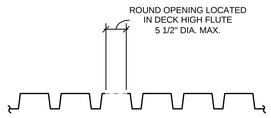

3" - TYPE N ROOF DECK

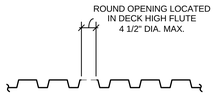

1 1/2" - TYPE HSB ROOF DECK

REINFORCED OPENINGS:

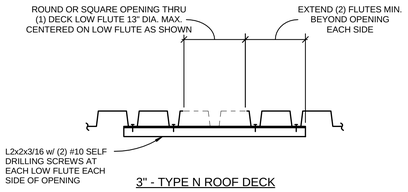

3" - TYPE N ROOF DECK

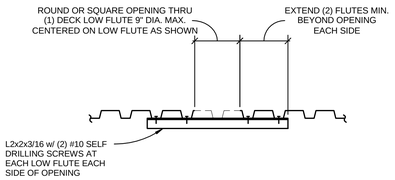

1 1/2" - TYPE HSB ROOF DECK

NOTE:
REF. 10/S6.04 FOR SUB FRAMING AT OPENINGS LARGER THAN THOSE SHOWN OR OPENINGS THROUGH MORE THAN (1) DECK LOW FLUTE.

9 TYP. ROOF DECK REINFORCING AT HOLES
1" = 1'-0"

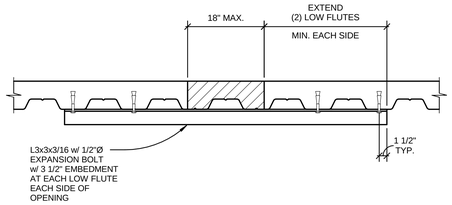

REINFORCING AT CORES TO 18" MAX.

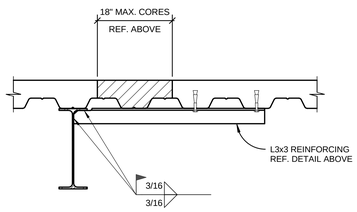

ANGLE REINFORCING AT WF CONFLICT

NOTES:

1. REF. 6/S6.04 FOR DIMENSION REQUIREMENTS WHERE ADJACENT HOLES MUST BE CONSIDERED AS ONE OPENING.
2. REF. 2/S6.04 FOR CORES TO 13" MAX. CENTERED ON DECK LOW FLUTE AND 6"Ø MAX. CORES LOCATED AT RANDOM.

7 TYP. POST-INSTALLED DECK REINFORCING AT HOLES
1" = 1'-0"

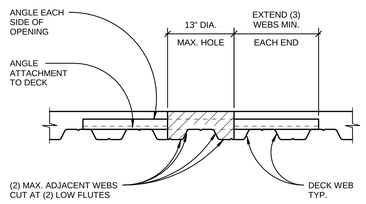

REINFORCING AT HOLES GREATER THAN 6" TO 13" MAX.
LOCATED w/ IMPACTS TO (2) ADJACENT LOW FLUTES

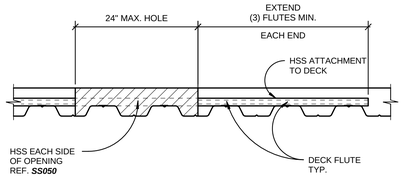

REINFORCING AT HOLES 13" TO 24" MAX.

NOTES:

1. REF. 4/S6.04 AND 6/S6.04 FOR CRITERIA ON DECK CUTTING PRIOR TO POUR OR AFTER CONCRETE CURING.
2. FOR HSS ATTACHMENT TO DECK REF. 4/S6.04.
3. FOR ANGLE ATTACHMENT TO DECK REF. 6/S6.04.

5 TYP. DECK REINFORCING AT HOLES
1" = 1'-0"

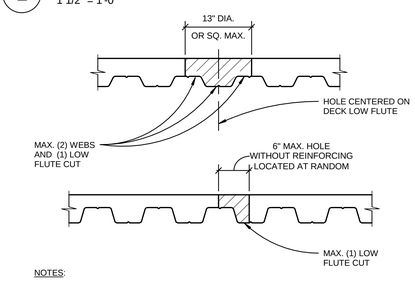

NOTES:

1. REF. 4/S6.04 AND 6/S6.04 FOR OPENINGS THAT DO NOT MEET THE REQUIREMENTS OF THIS DETAIL. REINFORCE ALL OPENINGS THAT IMPACT (2) ADJACENT LOW FLUTES.
2. REF. 6/S6.04 FOR DIMENSION REQUIREMENTS WHERE ADJACENT HOLES MUST BE CONSIDERED AS ONE OPENING.
3. OPENINGS THAT MEET THE REQUIREMENTS OF THIS DETAIL MAY BE FORMED PRIOR TO CONCRETE POUR OR CORE DRILLED AFTER PLACEMENT.

2 MAXIMUM ALLOWABLE DECK OPENING WITHOUT REINFORCING
1" = 1'-0"

NOTE:
FOR ANGLE INFORMATION REF. 10/S6.04.

12 TYP. DETAIL AT ROOF DECK OPENING
3" = 1'-0"

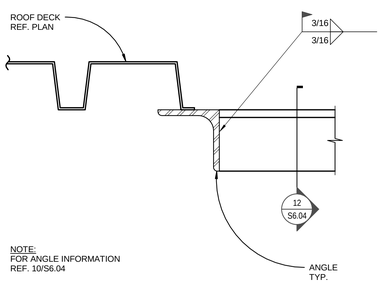

NOTE:
FOR ANGLE INFORMATION REF. 10/S6.04

13 TYP. FRAMING AT ROOF DECK OPENING
3" = 1'-0"

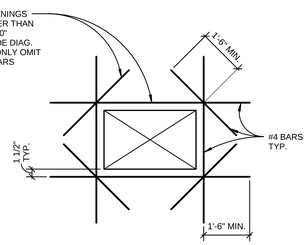

NOTE:
ALL OPENINGS NOT SHOWN ON THE STRUCTURAL DRAWINGS THAT ARE LARGER THAN 1'-0" SQUARE AND ALL MULTIPLE HOLES SPACED CLOSER THAN 3x LARGEST OPENING DIMENSION, SHALL BE SUBMITTED FOR REVIEW TO THE STRUCTURAL ENGINEER.

3 TYP. REINFORCING AT CONC. OVER METAL DECK OPENING
1" = 1'-0"

BR|IC ARCHITECTURE, INC.
1233 NW NORTHRUP STREET, SUITE 100
PORTLAND, OR 97209 T 503 595 4900

kpff
111 SW Fifth Ave., Suite 2500
Portland, OR 97204
O: 503.227.3251
F: 503.227.7980
www.kpff.com
10021700078R17

New Middle School / High School
Seaside School District
1801 S. FRANKLIN STREET, SEASIDE, OREGON 97138
t: 503-738-5591

phase	BP2-PERMIT SET
date	6/15/2018
revisions	
project #	17007

STEEL DETAILS

S6.04

6/14/2018 12:13:27 PM
C:\1REVIT\10021700078_Courtney.Bradshaw@kpff.com.rvt

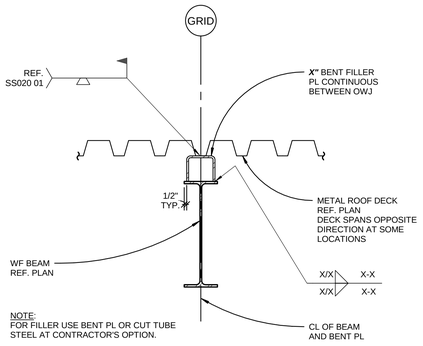

11 TYP. ROOF DECK DRAG CONNECTION AT OWJ FRAMING

1" = 1'-0"

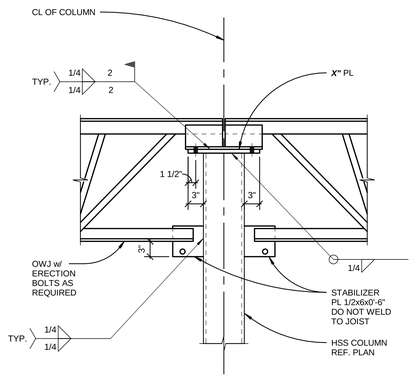

TYPICAL

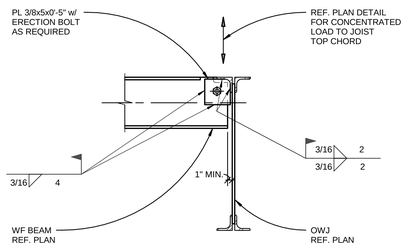

12 TYP. WF CONNECTION TO ROOF AT OWJ'S

1" = 1'-0"

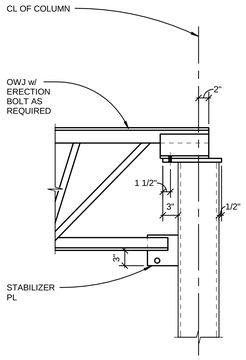

NOTE:
REF. TYPICAL DETAIL FOR INFORMATION NOT SHOWN.

ONE-SIDED

8 TYP. JOIST CONNECTION AT COLUMN

1" = 1'-0"

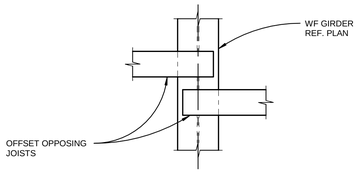

PLAN A-A

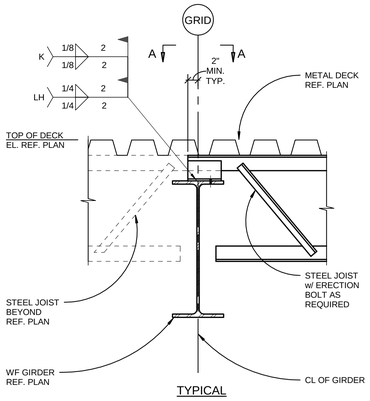

TYPICAL

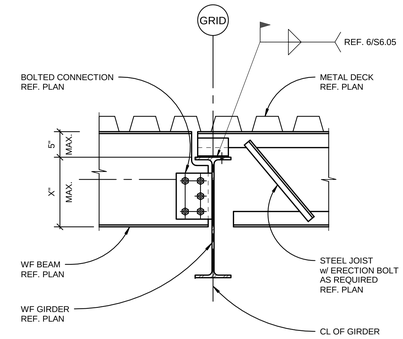

4 TYP. JOIST/BEAM TO GIRDER CONNECTION

1" = 1'-0"

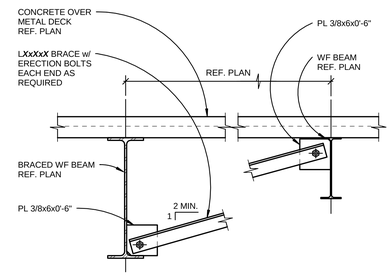

AT COMPOSITE DECK

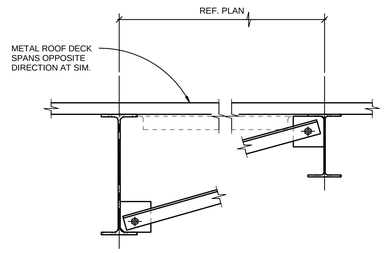

AT ROOF DECK

NOTES:

1. REF. ◄◄►► DESIGNATION ON FRAMING PLANS FOR BRACE LOCATIONS.
2. FOR INFORMATION NOT SHOWN REF. DETAIL AT COMPOSITE DECK.

1 TYP. DIAGONAL BRACING AT WF BEAM

1" = 1'-0"

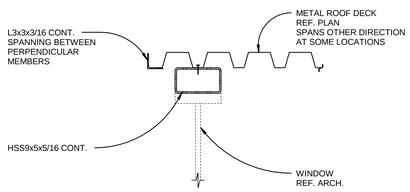

13 TOP OF WINDOW TO ROOF CONNECTION

1" = 1'-0"

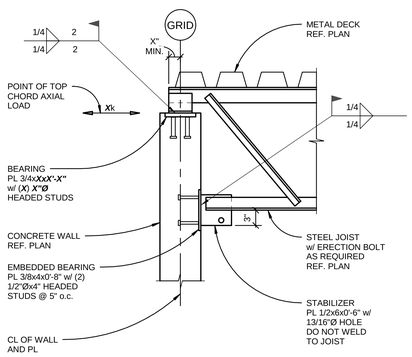

9 TYP. JOIST TO WALL CONNECTION

1" = 1'-0"

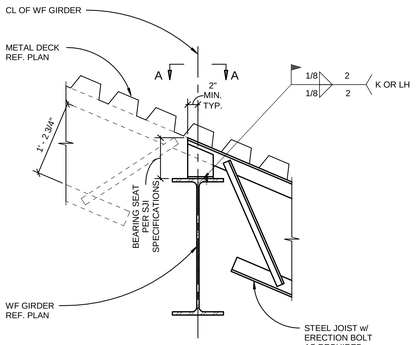

SLOPED ROOF

6 TYP. JOIST TO GIRDER CONNECTION

1" = 1'-0"

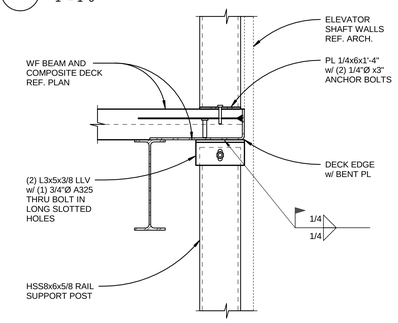

TYPICAL FRAMING STOPS

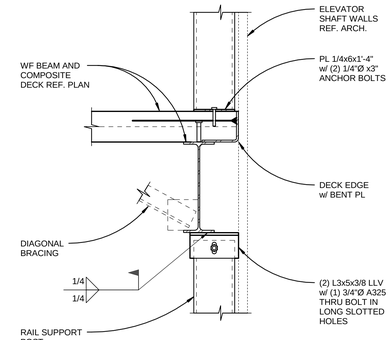

NOTE:
FOR INFORMATION NOT SHOWN REF. TYPICAL DETAIL.

TYPICAL FRAMING STOPS BELOW BEAM

NOTES:

1. FOR DECK EDGE REF. 2/S6.03.
2. FOR DIAGONAL BRACING REF. 1/S6.05.

5 ELEVATOR RAIL SUPPORT FRAMING

1" = 1'-0"

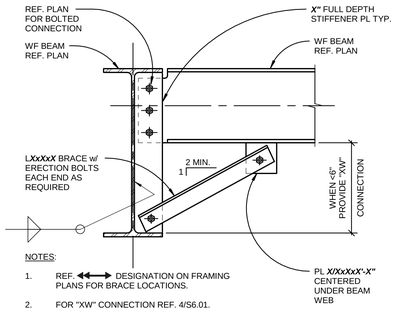

NOTES:

1. REF. ◄◄►► DESIGNATION ON FRAMING PLANS FOR BRACE LOCATIONS.
2. FOR "XW" CONNECTION REF. 4/S6.01.

2 TYP. BOTTOM FLANGE BRACE AT WF BEAM

1" = 1'-0"

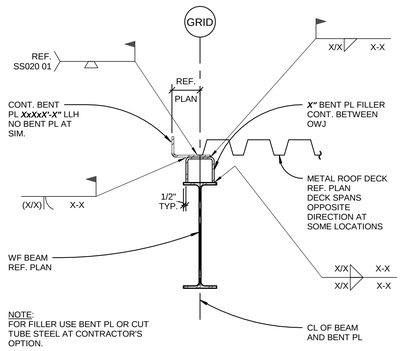

10 TYP. ROOF DECK EDGE AT OWJ FRAMING

1" = 1'-0"

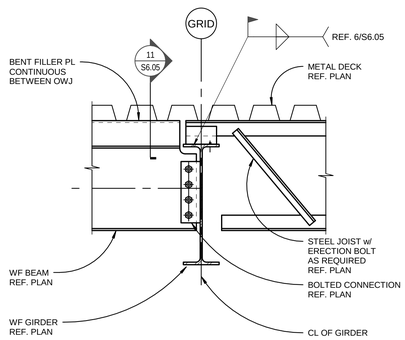

7 TYP. JOIST/BEAM TO GIRDER CONNECTION

1" = 1'-0"

BR|IC ARCHITECTURE, INC.
1233 NW NORTHRUP STREET, SUITE 100
PORTLAND, OR 97209 T 503.595.4900

New Middle School / High School
Seaside School District
1801 S. FRANKLIN STREET, SEASIDE, OREGON 97138
t: 503-738-5591

kpff
111 SW Fifth Ave., Suite 2500
Portland, OR 97204
O: 503.227.3251
F: 503.227.7980
www.kpff.com
10021700078R17

phase	BP2-PERMIT SET
date	6/15/2018
revisions	
project #	17007

STEEL DETAILS

S6.05

6/14/2018 12:13:30 PM
C:\1REVIT\10021700078_Courtney.Bradshaw@kpff.com.rvt

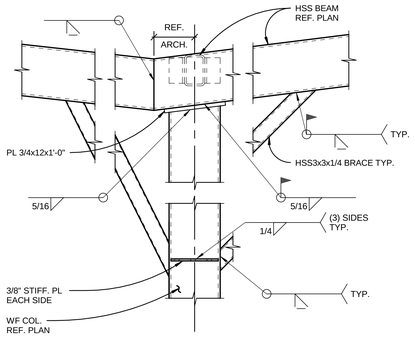

5 TOP OF CANOPY CONNECTION
1" = 1'-0"

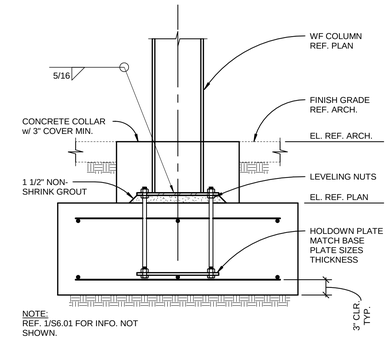

1 FOOTING DETAIL AT STEEL COLUMN
1" = 1'-0"

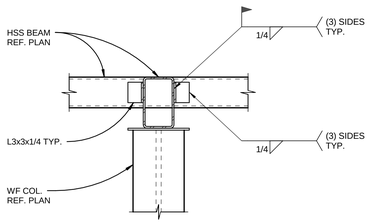

6 CANOPY HSS-HSS CONNECTION
1" = 1'-0"

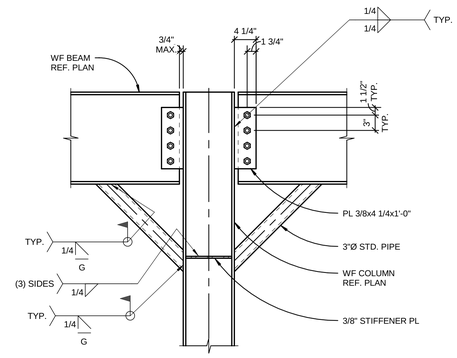

2 WF BEAM TO WF COLUMN
1" = 1'-0"

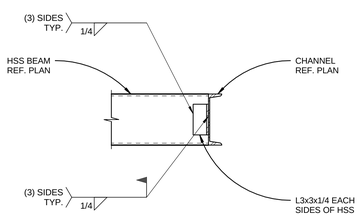

7 PERIMETER CHANNEL CONNECTION
1" = 1'-0"

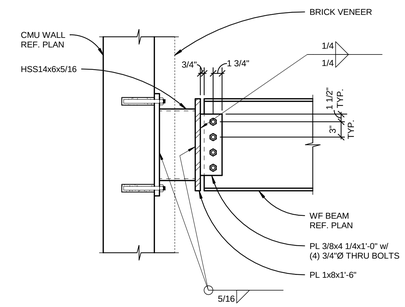

3 WF CONNECTION TO CMU WALL
1" = 1'-0"

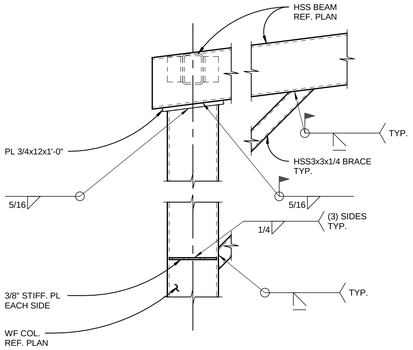

8 TOP OF CANOPY CONNECTION
1" = 1'-0"

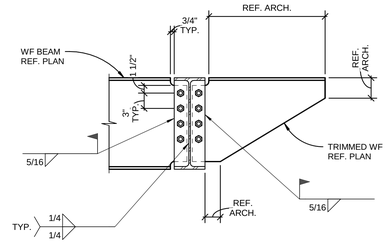

4 OUTRIGGER CONNECTION
1" = 1'-0"

BRIC ARCHITECTURE, INC.
1233 NW NORTHRUP STREET, SUITE 100
PORTLAND, OR 97209 T 503.595.4900

New Middle School / High School
Seaside School District
1801 S. FRANKLIN STREET, SEASIDE, OREGON 97138
t: 503-738-5591

kpff
111 SW Fifth Ave., Suite 2500
Portland, OR 97204
O: 503.227.3251
F: 503.227.7980
www.kpff.com
10021700078R17

phase	BP2-PERMIT SET
date	6/15/2018
revisions	
project #	17007

STEEL DETAILS

S6.10

6/14/2018 12:13:32 PM
C:\1REVIT\100217000\78_Courtney.Bradshaw@kpff.com.rvt

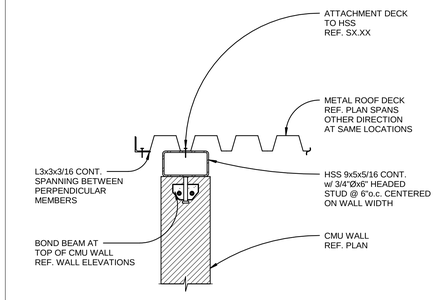

14 TOP OF CMU WALL TO ROOF CONNECTION
1" = 1'-0"

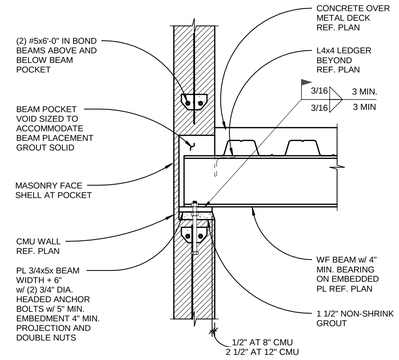

11 TYPICAL WF BEAM TO CMU WALL CONNECTION
1" = 1'-0"

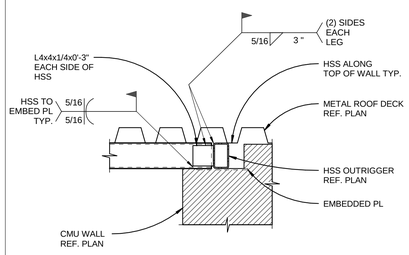

15 HSS CHORD CONTINUITY CONNECTION
1" = 1'-0"

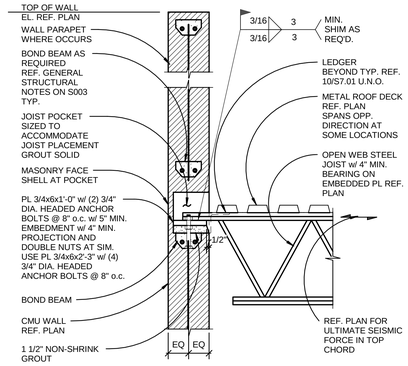

12 TYPICAL OWJ TO CMU WALL CONN.
1" = 1'-0"

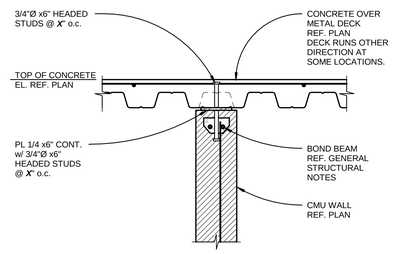

8 TYP. CONCRETE OVER METAL DECK TO CMU WALL
1" = 1'-0"

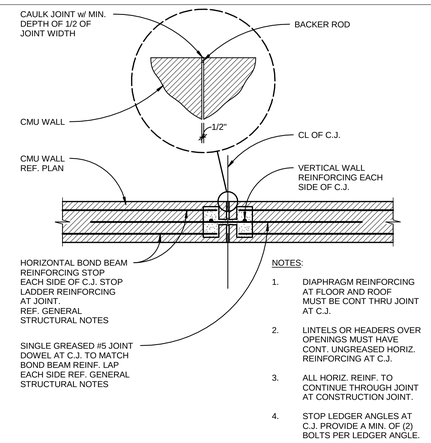

NOTES:

1. DIAPHRAGM REINFORCING AT FLOOR AND ROOF MUST BE CONT THRU JOINT AT C.J.
2. LINTELS OR HEADERS OVER OPENINGS MUST HAVE CONT. UNGREASED HORIZ. REINFORCING AT C.J.
3. ALL HORIZ. REINF. TO CONTINUE THROUGH JOINT AT CONSTRUCTION JOINT.
4. STOP LEDGER ANGLES AT C.J. PROVIDE A MIN. OF (2) BOLTS PER LEDGER ANGLE.

3 TYP. CONTROL JOINT DETAIL
1" = 1'-0"

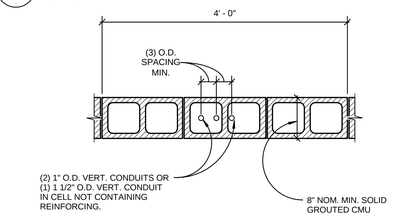

NOTES:

1. ALUMINUM CONDUITS ARE NOT PERMITTED.
2. PIPES CONTAINING LIQUID, GAS OR VAPOURS AT TEMPERATURES HIGHER THAN 150 ° F ARE NOT PERMITTED TO BE EMBEDED INTO CMU WALLS.
3. PIPES UNDER PRESSURE IN EXCESS OF 55 PSI ARE NOT PERMITTED TO BE EMBEDED IN CMU WALLS.
4. PIPES CONTAININS WATER OR OTHER LIQUIDS SUBJECT TO FREEZING ARE NOT PERMITTED TO BE EMBEDED IN CMU WALLS.
5. A MAXIMUM OF (2) CELLS PER 48" OF CMU WALL IS PERMITTED TO CONTAIN CONDUITS.
6. HORIZ. RUNS MUST BE LESS THAN 16".

4 CONDUITS EMEDED IN CMU WALL
1" = 1'-0"

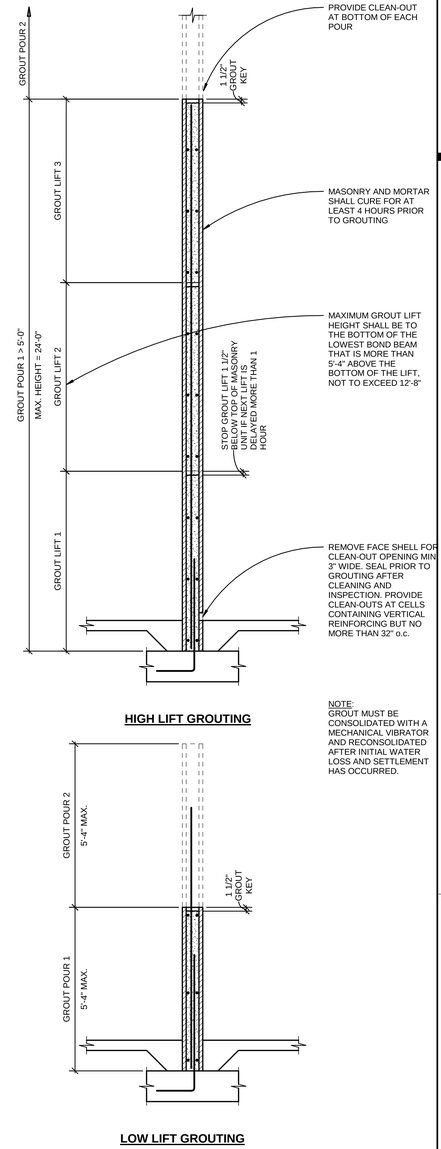

NOTE:
GROUT MUST BE CONSOLIDATED WITH A MECHANICAL VIBRATOR AND RECONSOLIDATED AFTER INITIAL WATER LOSS AND SETTLEMENT HAS OCCURRED.

1 TYP. MASONRY GROUTING DETAIL
1/2" = 1'-0"

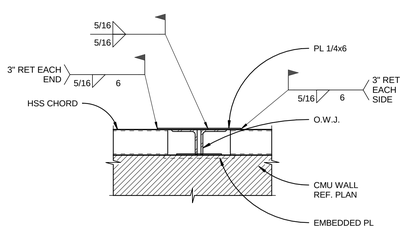

16 HSS CHORD CONTINUITY CONNECTION
1" = 1'-0"

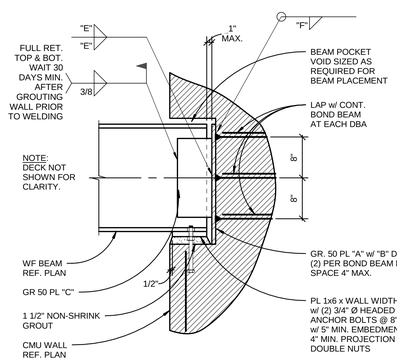

	PLATE "A" (TxWxH)	DBA'S "B"	KNIFE PLATE "C" (TxWxH)	WELD "D"	WELD "E"	WELD "F"	ULTIMATE CAPACITY
A	1 1/8"x6"x19"	(6) #7x5'-3	5/8"x8"x12"	7"	7/16"	1/2"	150K
B	1 1/4"x6"x27"	(8) #8x6'-0"	5/8"x13"x14"	12"	1/2"	9/16"	275K
C	1"x6"x11"	(4) #7x5'-3"	5/8"x8"x7"	7"	7/16"	1/2"	130K

13 TYP. WF DRAG STRUT TO CMU WALL
1" = 1'-0"

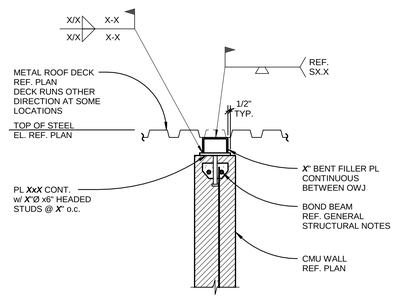

9 TYP. METAL ROOF DECK CONNECTION BETWEEN OWJ
1" = 1'-0"

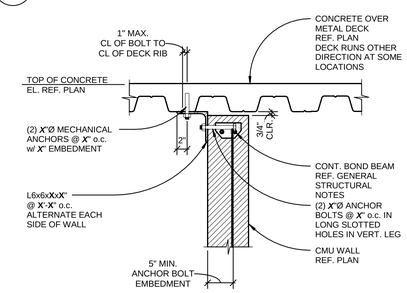

5 TYP. CMU PARTITION AT SLAB OVER METAL DECK
1" = 1'-0"

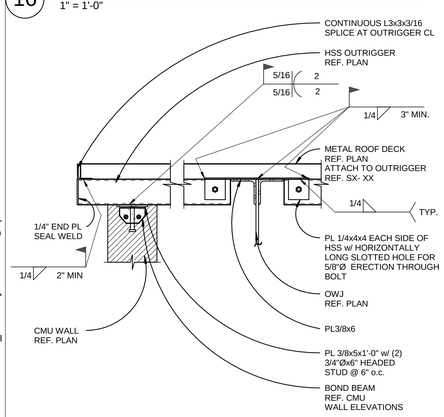

17 OUTRIGGER AT TOP OF CMU WALL
1" = 1'-0"

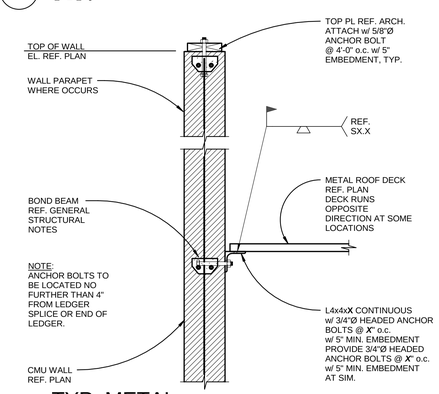

10 TYP. METAL ROOF DECK TO CMU WALL
1" = 1'-0"

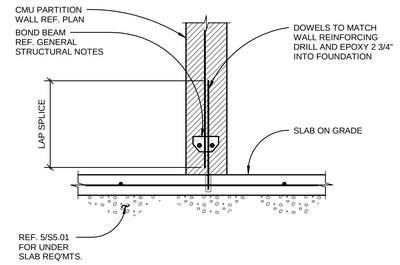

6 TYP. NON-STRUCTURAL CMU WALL FOUNDATION
1" = 1'-0"

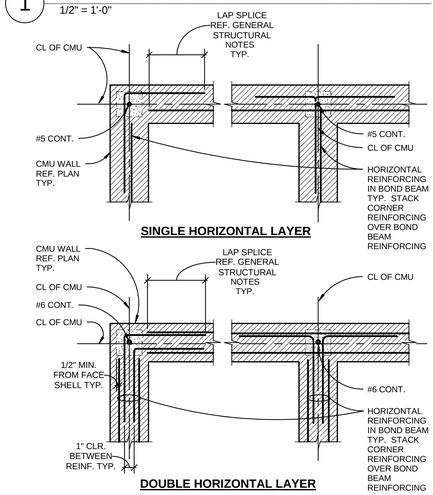

2 TYP. CMU WALL CORNER PLAN DETAILS
1" = 1'-0"

BR|IC ARCHITECTURE, INC.
1233 NW NORTHRUP STREET, SUITE 100
PORTLAND, OR 97209 T 503 595 4900

kpff
111 SW Fifth Ave., Suite 2500
Portland, OR 97204
O: 503.227.3251
F: 503.227.7980
www.kpff.com
100217000780R17

New Middle School / High School
Seaside School District
1801 S. FRANKLIN STREET, SEASIDE, OREGON 97138
t: 503-738-5591

phase	BP2-PERMIT SET
date	6/15/2018
revisions	
project #	17007

CMU DETAILS

S7.01

6/14/2018 12:13:37 PM
C:\1REVIT\100217000780_Courtney.Bradshaw@kpff.com.rvt

PLUMBING SYMBOL LIST

NOTE: This is a standard symbol list and not all items listed may be used.

Abbreviations

(A)	ABANDON IN PLACE
AFF	ABOVE FINISHED FLOOR
AP	ACCESS PANEL
AR	ACID-RESISTANT
&	AND
A	AQUASTAT, ARCHITECT, ANCHOR, AMPHERE
@	AT
BFP	BACKFLOW PREVENTER
BV	BALANCING VALVE
BFF	BELOW FINISHED FLOOR
BFG	BELOW FINISHED GRADE
BTUH	BRITISH THERMAL UNITS PER HOUR
BLDG	BUILDING
CV	CHECK VALVE
CO	CLEANOUT
CW	COLD WATER
CD	CONDENSATE DRAIN
CONT.	CONTINUATION
CFH	CUBIC FEET PER HOUR
CFM	CUBIC FEET PER MINUTE
CFS	CUBIC FEET PER SECOND
CF	CUBIC FOOT
(X)	DEMOLISH
DW	DISHWASHER, DOMESTIC WATER
DET	DOMESTIC EXPANSION TANK
DCVA	DOUBLE CHECK VALVE ASSEMBLY
DN	DOWN
DS	DOWNSPOUT
DSN	DOWNSPOUT NOZZLE
D	DRAIN
DFU	DRAINAGE FIXTURE UNIT
DWV	DRAINAGE, WASTE AND VENT
DF	DRINKING FOUNTAIN
EWC	ELECTRIC WATER COOLER
EWH	ELECTRIC WATER HEATER
ELECT	ELECTRICAL
ESV	ELECTRONIC SOLENOID VALVE
EEW	EMERGENCY EYE WASH
ESH	EMERGENCY SHOWER
(E)	EXISTING
EJ	EXPANSION JOINT
FT	FEET
FPS	FEET PER SECOND
FFE	FINISHED FLOOR ELEVATION
F	FIRE, FAHRENHEIT
FC	FLEXIBLE CONNECTOR
FL	FLOOR
FCO	FLOOR CLEANOUT
FD	FLOOR DRAIN
FS	FLOOR SINK, FLOW SWITCH
FV	FLUSH VALVE
'	FOOT, FEET
(F)	FUTURE
GPH	GALLONS PER HOUR
GPM	GALLONS PER MINUTE
GD	GARBAGE DISPOSER, GARAGE DRAIN
GWH	GAS WATER HEATER
GW	GREASE WASTE
HD	HEAD, HUB DRAIN
HP	HEAT PUMP, HORSE POWER, HOUSEKEEPING PAD
HVAC	HEATING, VENTILATING AND AIR CONDITIONING
HZ	HERTZ
HB	HOSE BIBB
HW	HOT WATER
HWFU	HOT WATER FIXTURE UNIT
HWR	HOT WATER RETURN
IN, "	INCHES
IW	INDIRECT WASTE
INV	INVERT ELEVATION
KW	KILOWATT
L	LAVATORY
MW	MAKE-UP WATER
MAX	MAXIMUM
HG	MERCURY
MIN	MINIMUM
MX	MIXING VALVE
MS	MOP SINK
MH	MOUNTING HEIGHT, MANHOLE
(N)	NEW
NPCW	NON-POTABLE COLD WATER
NC	NORMALLY CLOSED
NOP	NORMALLY OPEN
N	NORTH
N/A	NOT APPLICABLE
NIC	NOT IN CONTRACT
NTS	NOT TO SCALE
#	NUMBER
NO.	NUMBER
OD	OVERFLOW DRAIN, OUTSIDE DIAMETER
OFCI	OWNER FURNISHED, CONTRACTOR INSTALLED
OFOI	OWNER FURNISHED, OWNER INSTALLED
PH	PHASE
PLBG	PLUMBING
P	PLUMBING, PUMP
POC	POINT OF CONNECTION
PSI	POUNDS PER SQUARE INCH
PD	PRESSURE DROP, PLUMBING DEMOLITION, PUMPED DISCHARGE
PG	PRESSURE GAUGE
PRV	PRESSURE REDUCING VALVE
PS	PRESSURE SWITCH
QTY	QUANTITY
RWL	RAINWATER LEADER
RPBP	REDUCED PRESSURE BACKFLOW PREVENTER
RV	RELIEF VENT, RELIEF VALVE
(R)	RELOCATE / RELOCATED LOCATION
RPM	REVOLUTIONS PER MINUTE
RD	ROOF DRAIN
SAN	SANITARY
SJ	SEISMIC JOINT
SB	SERVICE BOX
SS	SERVICE SINK
SHT	SHEET
SA	SHOCK ARRESTOR
SH	SHOWER
SOV	SHUT OFF VALVE
S, SK	SINK
SF	SQUARE FEET
SD	STORM DRAIN
SP	SUMP PUMP, STATIC PRESSURE
TEMP	TEMPERATURE
T&P	TEMPERATURE AND PRESSURE
T	TEMPERATURE, THERMOMETER
MBH	THOUSAND BTU'S PER HOUR
TP	TRAP PRIMER, TOTAL PRESSURE
TD	TRENCH DRAIN
TYP	TYPICAL
U, UR	URINAL
V	VACUUM, VENT, VOLT
VFD	VARIABLE FREQUENCY DRIVE
VS	VENT STACK
VTR	VENT THRU ROOF
WCO	WALL CLEANOUT
WB	WASHER BOX
W	WASTE
WS	WASTE STACK
WC	WATER COLUMN
WC	WATER COLUMN, WATER CLOSET
WHA	WATER HAMMER ARRESTOR
WH	WATER HEATER, WALL HYDRANT
WSFU	WATER SUPPLY FIXTURE UNIT
W/	WITH

Control Symbols

- AI — ANALOG INPUT TO DDC PANEL
- AO — ANALOG OUTPUT FROM DDC PANEL
- DP — DIFFERENTIAL PRESSURE SENSOR
- DI CT — DIGITAL INPUT CURRENT TRANSFORMER
- DI — DIGITAL INPUT TO DDC PANEL
- DO — DIGITAL OUTPUT FROM DDC PANEL
- DO S/S — DIGITAL OUTPUT START/STOP SIGNAL
- FM — FLOW METER
- T E — LINE VOLTAGE THERMOSTAT

General

- CONTINUATION
- X / X — DETAIL NUMBER AND SHEET LOCATION
- XX-X LOCATION — EQUIPMENT IDENTIFICATION
- EXTENT OF DEMOLITION
- X — FIXTURE TAG (LEVEL BELOW FIXTURE)
- XX — FOOD SERVICE EQUIPMENT / CALCULATION TAG
- X — KEYED NOTE
- PIPE BELOW GRADE
- POINT OF CONNECTION
- A / XXX — SECTION NUMBER AND SHEET LOCATION
- DEMOLISH
- EXISTING WORK
- NEW WORK
- PIPE OR CONDUIT BELOW GRADE

Piping Fittings

- AP — ACCESS PANEL
- AQUASTAT
- AD — AREA DRAIN
- BLIND FLANGE
- CAP
- CB — CATCH BASIN
- COTG — CLEANOUT TO GRADE
- CONCENTRIC REDUCER
- DSN — DOWNSPOUT NOZZLE
- ECCENTRIC REDUCER
- EXPANSION JOINT
- FLEXIBLE CONNECTION
- FCO — FLOOR CLEANOUT
- FD — FLOOR DRAIN
- FS — FLOOR SINK
- FLOW DIRECTION
- FLOW SWITCH
- HOSE BIBB / WALL HYDRANT
- HD — HUB DRAIN
- M — METER
- OD — OVERFLOW ROOF DRAIN
- PEX — PEX MANIFOLD
- PIPE DROP
- PIPE RISE
- PRESSURE GAUGE WITH COCK
- PUMP
- RD — ROOF DRAIN
- SHOCK ABSORBER / WATER HAMMER ARRESTOR
- STRAINER
- T&P RELIEF VALVE WITH PIPE TO DRAIN
- TEE DOWN ON PIPE
- TEE UP ON PIPE
- TEMPERATURE SENSOR
- TEST PORT
- THERMOMETER
- TP — TRAP PRIMER MANIFOLD
- TRENCH DRAIN
- UNION
- VACUUM RELIEF
- VTR — VENT THROUGH ROOF
- WCO — WALL CLEANOUT

Piping Systems

- AV — ACID RESISTANT VENT PIPING
- AW — ACID RESISTANT WASTE ABOVE GRADE
- AW — ACID RESISTANT WASTE BELOW GRADE
- COLD WATER PIPING
- CA — COMPRESSED AIR PIPING
- D — CONDENSATE / INDIRECT DRAIN PIPING
- DIR — DE-IONIZED WATER RETURN
- DIS — DE-IONIZED WATER SUPPLY
- DI — DISTILLED WATER
- F — FIRE PROTECTION PIPING
- 140°HW — FOOD SERVICE HOT WATER PIPING
- 140°HWR — FOOD SERVICE HOT WATER RETURN PIPING
- GV — GAS VENT PIPING
- GW — GREASE WASTE ABOVE GRADE OR FINISHED FLOOR
- GW — GREASE WASTE BELOW GRADE OR FINISHED FLOOR
- HOT WATER PIPING
- HOT WATER RETURN PIPING
- IR — IRRIGATION
- 2#G — NATURAL GAS PIPING, 2 LB
- G — NATURAL GAS PIPING, 7" WC PRESSURE
- NP — NON-POTABLE COLD WATER PIPING
- NP — NON-POTABLE HOT WATER PIPING
- OD — OVERFLOW DRAIN PIPING ABOVE GRADE OR FINISHED FLOOR
- PD — PUMPED DISCHARGE
- R/O — REVERSE OSMOSIS WATER
- SANITARY VENT PIPING
- SANITARY WASTE OR SOIL PIPING ABOVE GRADE OR FINISHED FLOOR
- SANITARY WASTE OR SOIL PIPING BELOW GRADE OR FINISHED FLOOR
- SHW — SOLAR HOT WATER
- SHWR — SOLAR HOT WATER RETURN
- SD — STORM DRAIN PIPING ABOVE GRADE OR FINISHED FLOOR
- SD — STORM DRAIN PIPING BELOW GRADE OR FINISHED FLOOR
- TW — TEMPERED WATER PIPING
- TP — TRAP PRIMER PIPING

Valves

- BFP — BACKFLOW PREVENTER
- BACKWATER VALVE
- X GPM — BALANCING VALVE
- CHECK VALVE
- EARTHQUAKE GAS VALVE
- ELECTRONIC SOLENOID VALVE
- GLOBE VALVE
- HOSE END DRAIN VALVE
- MOTORIZED, 2-WAY VALVE
- MOTORIZED, 3-WAY VALVE
- NATURAL GAS PIPING CONNECTION ASSEMBLY
- PRESSURE REDUCING VALVE
- SHUTOFF VALVE, GENERAL

GENERAL PLUMBING NOTES

A. SEE ARCHITECTURAL DRAWINGS FOR EXACT FIXTURE LOCATIONS.

B. REFER TO ARCHITECRUAL DRAWINGS FOR ADA ACCESSIBILITY REQUIREMENTS.

C. CONDITIONS SHOWN ON THE PLANS RELATIVE TO THE WORK TO BE PERFORMED ARE BASED ON THE BEST INFORMATION AVAILABLE BUT ARE SUBJECT TO VERIFICATION. VERIFY LOCATIONS AND ELEVATIONS OF UTILITIES TO BE CROSSED OR CONNECTED. CORRECT DEFICIENCIES CAUSED BY FAILURE TO PERFORM SUCH VERIFICATIONS AT NO EXPENSE TO OWNER. IMMEDIATELY NOTIFY ARCHITECT AND ENGINEER OF CONDITION IN CONFLICT WITH THE DETAILS/PLANS.

NOTE: RESILIENCE FEATURES:

BASE BID: POTABLE WATER SUPPLY PIPING TO BE FUSED HDPE.

ALTERNATE BID: SANITARY GRAVITY SEWER PIPING AND FITTINGS TO BE DUCTILE IRON.

P0.01U SYMBOLS LISTS AND GENERAL NOTES - PLUMBING

P0.02U SCHEDULES - PLUMBING
P0.03U CALCULATIONS - PLUMBING

P1.01U FLOOR PLAN LEVEL 1 - BELOW MAT SLAB - SECTOR A1 - PLUMBING
P1.02U FLOOR PLAN LEVEL 1 - BELOW MAT SLAB - SECTOR B - PLUMBING
P1.03U FLOOR PLAN LEVEL 1 - BELOW MAT SLAB - SECTOR C - PLUMBING

P1.01 FLOOR PLAN LEVEL 1 - BELOW SLAB - SECTOR A1 - PLUMBING
P1.02 FLOOR PLAN LEVEL 1 - BELOW SLAB - SECTOR B - PLUMBING
P1.03 FLOOR PLAN LEVEL 1 - BELOW SLAB - SECTOR C - PLUMBING

P1.21 FLOOR PLAN LEVEL 2 - BELOW SLAB - SECTOR A2 - PLUMBING
P1.23 FLOOR PLAN LEVEL 2 - BELOW SLAB - SECTOR C - PLUMBING

P4.01U ENLARGED FLOOR PLAN - BELOW SLAB - SECTOR B - PLUMBING
P4.02U ENLARGED FLOOR PLANS - BELOW SLAB - SECTORS A AND B - PLUMBING
P4.03U ENLARGED FLOOR PLANS - BELOW SLAB - SECTOR C - PLUMBING

P5.01U DETAILS - PLUMBING

PROJECT 2017-0257
CONTACT Scott Holum
INTERFACE ENGINEERING
100 SW Main St.
Suite 1600
Portland, OR 97204
TEL 503.382.2266
FAX 503.382.2262
www.interfaceengineering.com

BR|IC ARCHITECTURE, INC.
1233 NW NORTHRUP STREET, SUITE 100
PORTLAND, OR 97209 T 503.595.4900

New Middle School / High School

Seaside School District
1801 S. FRANKLIN STREET, SEASIDE, OR 97138
t: 503-738-5591

REGISTERED PROFESSIONAL ENGINEER 17430 OREGON SEPT. 28, 2004 ANDREW W. FRICHTL

EXPIRES: 12/31/19

key plan

phase	BP2-PERMIT SET
date	6/15/2018
revisions	
project #	17007

SYMBOLS LISTS AND GENERAL NOTES - PLUMBING

P0.01U

6/13/2018 2:18:07 PM
C:\Users\Stuart\Documents\SSD MSHS Central-V17_StuartG@interfaceeng.com.rvt

PLUMBING FIXTURE SCHEDULE

			BASIS OF DESIGN			CONNECTION				
SYMBOL	FIXTURE TYPE	DESCRIPTION	MFR	MODEL	ACCESSORIES	W	V	CW	HW	NOTES
FD-1	FLOOR DRAIN (FINISHED FLOORS / SHOWERS)	CAST IRON BODY, FLASHING COLLAR, 6-INCH ADJUSTABLE NICKEL BRONZE STRAINER HEAD, TRAP PRIMER CONNECTION	JR SMITH	2005Y-A-06-P050-NB		3"*	1-1/2"*	PRIMER CONN.	--	
FD-2	FLOOR DRAIN WITH ANTI-FLOOD RIM	CAST IRON BODY, FLASHING COLLAR, 6-INCH ADJUSTABLE NICKEL BRONZE STRAINER HEAD WITH SECURED GRATE AND FUNNEL, TRAP PRIMER CONNECTION	JR SMITH	2005-Y-F37-P050		3"*	1-1/2"*	PRIMER CONN.	--	
FD-3	FLOOR DRAIN WITH INTEGRAL TRAP AND CLEANOUT (CRITICAL DEPTH APPLICATION)	CAST IRON BODY AND GRATE, FLANGE, TRAP PRIMER.	JR SMITH	2515S- P050		3"*	1-1/2"*	PRIMER CONN.		
FD-4	FLOOR DRAIN WITH INTEGRAL TRAP AND CLEANOUT (CRITICAL DEPTH APPLICATION)	CAST IRON BODY AND GRATE WITH BRONZE CLEANOUT PLUG, FLANGE, TRAP PRIMER.	JR SMITH	2515S- P050	FUNNEL: J.R. SMITH 3581	3"*	1-1/2"*	PRIMER CONN.		
FS-1	FLOOR SINK (FOOD SERVICE AREAS)	CAST IRON FLANGED RECEPTOR, SEEPAGE HOLES, ACID RESISTANT COATED INTERIOR, NICKEL BRONZE RIM, ALUMINUM DOME BOTTOM STRAINER, 6-INCH DEEP	JR SMITH	3140Y		3"*	1-1/2"*	PRIMER CONN.	--	COORDINATE GRATE REQUIREMENTS WITH FOOD SERVICE CONSULTANT.
FS-2	FLOOR SINK (FOOD SERVICE AREAS)	CAST IRON FLANGED RECEPTOR, SEEPAGE HOLES, ACID RESISTANT COATED INTERIOR, NICKEL BRONZE RIM, ALUMINUM DOME BOTTOM STRAINER, 8-INCH DEEP	JR SMITH	3150Y		3"*	1-1/2"*	PRIMER CONN.	--	COORDINATE GRATE REQUIREMENTS WITH FOOD SERVICE CONSULTANT.
FS-3	FLOOR SINK (FOOD SERVICE AREAS)	CAST IRON FLANGED RECEPTOR, SEEPAGE HOLES, ACID RESISTANT COATED INTERIOR, NICKEL BRONZE RIM, ALUMINUM DOME BOTTOM STRAINER, 8-INCH DEEP	JR SMITH	3150Y		4"*	2"*	PRIMER CONN.	--	COORDINATE GRATE REQUIREMENTS WITH FOOD SERVICE CONSULTANT. SET RIM AT 1" ABOVE FINISH FLOOR ELEVATION.
FS-4	FLOOR SINK (EMERGENCY SHOWERS - FIRST FLOOR)	CAST IRON FLANGED RECEPTOR, SEEPAGE HOLES, ACID RESISTANT COATED INTERIOR, NICKEL BRONZE RIM, FULL GRATE, ALUMINUM DOME BOTTOM STRAINER, 6-INCH DEEP	JR SMITH	3140Y		4"*	2"*	TRAP PRIMER CONN.	--	
FS-5	FLOOR SINK (EMERGENCY SHOWERS - SECOND AND THIRD FLOORS)	CAST IRON FLANGED RECEPTOR, SEEPAGE HOLES, ACID RESISTANT COATED INTERIOR, NICKEL BRONZE RIM, FULL GRATE, ALUMINUM DOME BOTTOM STRAINER, 8-INCH DEEP	JR SMITH	3150Y		4"*	2"*	TRAP PRIMER CONN.	--	
FS-6	FLOOR SINK (HYDROTHERAPY TUBS)	CAST IRON FLANGED RECEPTOR, SEEPAGE HOLES, ACID RESISTANT COATED INTERIOR, NICKEL BRONZE RIM, HALF GRATE, ALUMINUM DOME BOTTOM STRAINER, 3-INCH DEEP	JR SMITH	3020Y-12		3"*	1-1/2"*	PRIMER CONN.	--	
MS-1	MOP SINK	FLOOR MOUNTED, ENAMELED CAST IRON, 28-INCHES X 28-INCHES X 13-INCHES, FLAT GRID DRAIN	KOHLER	6710	FAUCET (MOP SINK): CHICAGO 540-LD897SWXFABCP LEAD-FREE FAUCET (PROVIDE WITH CHICAGO GCJKABCP INTEGRAL CHECKS). RIM GUARD: KOHLER K-8940	3"	1-1/2"	1/2"	1/2"	
MS-2	MOP SINK (CRITICAL DEPTH APPLICATION)	FLOOR MOUNTED, ENAMELED CAST IRON, 28-INCHES X 28-INCHES X 13-INCHES, FLAT GRID DRAIN	KOHLER	6710	FAUCET (MOP SINK): CHICAGO 540-LD897SWXFABCP LEAD-FREE FAUCET (PROVIDE WITH CHICAGO GCJKABCP INTEGRAL CHECKS). RIM GUARD: KOHLER K-8940	2"	1-1/2"	1/2"	1/2"	
SHD-1	SHOWER DRAIN (TRENCH DRAIN)	18 GAGE TYPE 304 STAINLESS STEEL BODY, SECURED STAINLESS STEEL PERFORATED GRATE, FLASHING FLANGE, 2" NO-HUB BOTTOM OUTLET.	JR SMITH	9667-SPG-U-F		2"*	1-1/2"*	PRIMER CONN.	--	

*UNLESS NOTED OTHERWISE ON DRAWINGS.
** TOTAL OF TWO (2) CONNECTIONS EACH)

PLUMBING DEVICES SCHEDULE

			BASIS OF DESIGN			CONNECTION				
SYMBOL	FIXTURE TYPE	DESCRIPTION	MFR	MODEL	ACCESSORIES	W	V	CW	HW	NOTES
AN-1	ACID NEUTRALIZATION SYSTEM	125 GALLON HIGH DENSITY POLYETHYLENE TANK WITH INLETS, OUTLETS, VENTS, COVER, RISER SYSTEM AND MONITORING EQUIPMENT.	STRIEM by SCHIER	LB-125	BELOW GRADE SENSOR PLACEMENT KIT, STRIEM SPK-B. SEE MISC. PLUMBING EQUIPMENT SCHEDULE IN ABOVE SLAB BID PACKAGE (BP4) FOR COMMAND CENTER PH MONITOR ANCC-1.	4"	2"	---	---	PROVIDE WITH TELEGLIDE FIELD ADJUSTABLE RISER AND 90%+ CALCIUM CARBONATE LIMESTONE.
GI-1	GREASE INTERCEPTOR	PRECAST REINFORCED CONCRETE, UNDERGROUND INSTALLATION, 2,000 GALLON CAPACITY. PROVIDE ACCESS VAULT, GRADE EXTENSIONS AND RISERS AS REQUIRED.	OLDCASTLE PRECAST	612-GA		4"	---	---	---	SUBMIT SHOP DRAWINGS TO LOCAL JURISDICTION FOR APPROVAL PRIOR TO PURCHASE.

NOTES:

PROJECT 2017-0257
CONTACT Scott Holum
INTERFACE ENGINEERING
100 SW Main St.
Suite 1600
Portland, OR 97204
TEL 503.382.2266
FAX 503.382.2262
www.interfaceengineering.com

BR|IC ARCHITECTURE, INC.
1233 NW NORTHRUP STREET, SUITE 100
PORTLAND, OR 97209 T 503.595.4900

New Middle School / High School

Seaside School District
1801 S. FRANKLIN STREET, SEASIDE, OR 97138
t: 503-738-5591

REGISTERED PROFESSIONAL ENGINEER 17430 OREGON SEPT. 28, 1984 ANDREW W. FRICHTL
EXPIRES: 12/31/19

k e y p l a n

phase	BP2-PERMIT SET
date	6/15/2018
revisions	
project #	17007

SCHEDULES - PLUMBING

P0.02U

6/13/2018 11:22:25 AM
C:\Users\StuartG\Documents\SSD MSHS Central-V17_StuartG@interfaceeng.com.rvt

SANITARY DRAINAGE CALCULATIONS

FIXTURE QUANTITY				TABLE 7-3			
PRIVATE INDIVIDUAL DWELLING	PUBLIC GENERAL USE	PUBLIC HEAVY USE ASSEMBLY	DESCRIPTION	PRIVATE INDIVIDUAL DWELLING	PUBLIC GENERAL USE	PUBLIC HEAVY-USE ASSEMBLY	TOTAL FIXTURE UNITS
PLUMBING FIXTURES - OUTSIDE OF FOOD SERVICE AREAS							
0	2	0	CLOTHESWASHER, DOMESTIC	3.00	3.00	3.00	6.00
0	2	0	DISHWASHER, DOMESTIC, INDEPENDENT DRAIN	2.00	2.00	2.00	4.00
0	11	0	DRINKING FOUNTAIN OR WATER COOLER	0.50	0.50	1.00	5.50
0	54	0	FLOOR DRAIN, EMERGENCY	0.00	0.00	0.00	0.00
0	3	0	FUME HOOD	1.00	1.00	1.00	3.00
0	2	0	HYDROTHERAPY TUB	2.00	2.00	2.00	4.00
0	43	8	LAVATORY, SINGLE	1.00	1.00	1.00	51.00
0	6	0	SERVICE SINK OR MOP BASIN, 3" TRAP	0.00	3.00	0.00	18.00
0	3	10	SHOWER, STALL, 2" TRAP	2.00	2.00	2.00	26.00
0	68	0	SINK, CLASSROOM, 1 1/2" TRAP	0.00	2.00	2.00	136.00
0	7	0	SINK, WORK/BREAK ROOM, 1 1/2" TRAP	0.00	2.00	2.00	14.00
0	12	2	URINAL, 1.0 GPF	2.00	2.00	5.00	34.00
0	38	13	WATER CLOSET, 1.6 GPF, FLUSHOMETER VALVE	3.00	4.00	6.00	230.00
			TOTAL PLUMBING FIXTURE UNITS OUTSIDE OF FOOD SERVICE AREAS:				549.50
PLUMBING FIXTURES IN FOOD SERVICE AREAS:							
0	1	0	CLOTHESWASHER, DOMESTIC	3.00	3.00	3.00	3.00
0	2	0	COMMERCIAL DISHWASHER	0.00	8.00	0.00	16.00
0	8	0	FLOOR DRAIN, EMERGENCY	0.00	0.00	0.00	0.00
0	7	0	HAND SINK	0.00	1.00	0.00	7.00
0	1	0	MOP SINK	0.00	3.00	0.00	3.00
0	4	0	ONE COMPARTMENT PREP SINK	0.00	4.00	0.00	16.00
0	1	0	SCRAPER	0.00	3.00	0.00	3.00
0	3	0	STACKED COMBI-OVEN STEAM & CONV. OVEN	0.00	3.00	0.00	9.00
0	1	0	TILTING KETTLE	0.00	3.00	0.00	3.00
0	1	0	TILTING SKILLET	0.00	3.00	0.00	3.00
0	1	0	TWO COMPARTMENT SINK (2", TO F.S.)	0.00	4.00	0.00	4.00
0	2	0	THREE COMPARTMENT SINK (3" TRAP AND ARM)	0.00	6.00	0.00	12.00
			TOTAL FOOD SERVICE FIXTURE UNITS				**79.00**
			TOTAL PROJECT PLUMBING FIXTURE UNITS:				**628.50**
			PIPE SIZE				**6"**

NATURAL GAS CALCULATIONS - NEW MIDDLE SCHOOL / HIGH SCHOOL

FIXTURE	DESCRIPTION	NO. OF FIXT.	BTU/HR INPUT	TOTAL BTU/HR
MECHANICAL EQUIPMENT				
B-1	BOILER	1	2,000,000	2,000,000
B-2	BOILER	1	2,000,000	2,000,000
PLUMBING EQUIPMENT				
GWH-1	DOMESTIC WATER HEATER, MAIN HW SYSTEM	1	500,000	500,000
GWH-2	DOMESTIC WATER HEATER, MAIN HW SYSTEM	1	500,000	500,000
SCIENCE LAB OUTLETS / EQUIPMENT				
	GAS TURRET - DOUBLE OUTLET	9	6,000	54,000
	FUME HOODS	2	3,000	6,000
TOTAL 2 PSIG NATURAL GAS LOAD OUTSIDE OF KITCHEN AND CULINARY LAB:				**5,060,000**
FOOD SERVICE EQUIPMENT				
P8	4-OPEN BURNER	1	180,000	180,000
P10	25-GALLON TILTING KETTLE	2	80,000	160,000
P13	DOUBLE STACKED CONVECTION OVENS	2	55,000	110,000
P45	36" GRIDDLE WITH STAND (CULINARY ARTS)	1	96,000	96,000
P46	FRYER (CULINARY ARTS)	1	70,000	70,000
P49	OPEN BURNER RANGE (CULINARY ARTS)	1	184,000	184,000
P50	OPEN BURNER RANGE (CULINARY ARTS)	4	184,000	736,000
	TOTAL FOOD SERVICE EQUIPMENT LOAD:			**1,536,000**
TOTAL PROJECT GAS LOAD:				6,596,000
	TOTAL PROJECT DEMAND (CFH)			6,596

2 PSIG SYSTEM SIZING BASED ON
2 PSI SUPPLY PRESSURE WITH 1 PSI PRESSURE DROP
650 FEET TOTAL DEVELOPED LENGTH

3"	10400 CFH
2-1/2"	5870 CFH
2"	3680 CFH
1 1/2"	1910 CFH
1 1/4"	1280 CFH
1"	622 CFH
3/4"	348 CFH

STANDARD DELIVERY SYSTEM SIZING BASED ON
LESS THAN 2 PSI SUPPLY PRESSURE WITH 0.5 IN. W.C. PRESSURE DROP
100 FEET TOTAL DEVELOPED LENGTH

6"	12000 CFH
4"	6640 CFH
3"	3260 CFH
2-1/2"	1840 CFH
2"	1160 CFH
1 1/2"	600 CFH
1 1/4"	400 CFH
1"	195 CFH
3/4"	104 CFH
1/2"	50 CFH

WATER SERVICE CALCULATIONS - SEASIDE HEIGHTS MIDDLE SCHOOL AND HIGH SCHOOL

(BASED ON APPENDIX 'A')

FIXTURE QUANTITY				APPENDIX 'A' - TABLE A-2			TOTAL FIXTURE UNITS	
PRIVATE INDIVIDUAL DWELLING	PUBLIC GENERAL USE	PUBLIC HEAVY USE ASSEMBLY	DESCRIPTION	PRIVATE INDIVIDUAL DWELLING	PUBLIC GENERAL USE	PUBLIC HEAVY-USE ASSEMBLY	COLD WATER	(.75) HOT WATER
PLUMBING FIXTURES - OUTSIDE OF FOOD SERVICE AREAS								
0	2	0	CLOTHESWASHER, DOMESTIC	4.00	4.00	0.00	8.00	6.00
0	2	0	DISHWASHER, DOMESTIC	1.50	1.50	0.00	3.00	2.25
0	11	0	DRINKING FOUNTAIN OR WATER COOLER	0.00	0.50	0.75	5.50	---
0	3	0	FUME HOOD	1.00	1.00	1.00	3.00	2.25
0	1	0	HOSE BIBB	2.50	2.50	0.00	2.50	---
0	19	0	HOSE BIBB, EACH ADDITIONAL	1.00	1.00	0.00	19.00	---
0	2	0	HYDROTHERAPY TUB	4.00	4.00	0.00	8.00	6.00
0	1	0	ICE MACHINE	0.00	1.00	0.00	1.00	0.00
0	43	8	LAVATORY	1.00	1.00	1.00	51.00	38.25
0	6	0	SERVICE SINK OR MOP BASIN	1.50	3.00	0.00	18.00	13.50
0	3	10	SHOWER, EACH HEAD	2.00	2.00	2.00	26.00	19.50
0	67	0	SINK, CLASSROOM	0.00	1.50	1.50	100.50	75.38
0	7	0	SINK, WORK/BREAK ROOM	0.00	2.00	2.00	14.00	10.50
0	1	0	SINK, CLASSROOM, 2 - STATION	0.00	3.00	3.00	3.00	2.25
0	12	2	URINAL	3.00	4.00	5.00	58.00	---
0	38	13	WATER CLOSET, 1.6 GPF, FLUSHOMETER VALVE	5.00	5.00	8.00	294.00	---
			TOTAL PLUMBING FIXTURE UNITS OUTSIDE OF FOOD SERVICE AREAS:				614.50	175.88
PLUMBING FIXTURES - FOOD SERVICE AREA(S)								
0	2	0	CLOTHESWASHER, DOMESTIC	4.00	4.00	0.00	8.00	6.00
0	2	0	COMMERCIAL DISHWASHER	0.00	5.00	0.00	10.00	10.00
0	2	0	FILL FAUCET	0.00	1.50	0.00	3.00	0.00
0	7	0	HAND SINK	0.00	1.00	0.00	7.00	5.25
0	1	0	PRE-RINSE FAUCET	0.00	3.00	0.00	3.00	2.25
0	1	0	SCRAPER	0.00	3.00	0.00	3.00	2.25
0	4	0	ONE COMPARTMENT PREP SINK	0.00	1.50	0.00	6.00	4.50
0	1	0	SERVICE SINK OR MOP BASIN	1.50	3.00	0.00	3.00	2.25
0	3	0	STACKED COMBI-OVEN STEAMER & CONVECTION OVEN	0.00	1.00	0.00	3.00	2.25
0	2	0	THREE COMPARTMENT POT SINK	0.00	3.00	0.00	6.00	4.50
0	1	0	TWO COMPARTMENT PREP SINK	0.00	1.50	0.00	1.50	1.13
			TOTAL FOOD SERVICE FIXTURE UNITS				53.50	40.38
			TOTAL PROJECT WATER SOURCE FIXTURE UNITS				668.00	216.25
			FLOW IN GPM				170.00	68
			TOTAL GPM REQUIRED				170.00	
	a.		MINIMUM CALCULATED DAILY SERVICE PRESSURE (WS FOR GRAVITY RESERVOIR AT 425 FEET ELEVATION)				0	psi
			(APPROX. 159' ELEVATION)					
	b.		STATIC HEAD GAIN TO DOMESTIC WATER RISER (24" AFF):					
			0.434 PSI / FT. X 179	FT.			77.69	psi
	c.		PRESSURE LOSS, EXISTING 4" DOMESTIC WATER FROM STREET MAIN TO EXISTING DOMESTIC WATER RISER:					
			(170 FT TDL, 170 GPM) 170	FT. TDL X	0.9	PSI / 100 FT. =	1.53	psi
	d.		DOM. WATER METER PRESSURE DROP 4"	METER SIZE			6.00	psi
	e.		BACKFLOW PREVENTER (ON SITE) 4"	DCVA			5.00	psi
	f.		MINIMUM CALCULATED DAILY SERVICE PRESSURE					
			AT DOMESTIC WATER RISER: a + b - c - d - e				65.16	psi
	g.		SET PRESSURE REGULATING STATION TO:				55.00	psi
	h.		STATIC HEAD LOSS: 0.434 PSI / FT X 34	FT. RISE			14.76	psi
	j.		PRESSURE REQUIRED AT FIXTURE				30.00	psi
	k.		PRESSURE AVAILABLE FOR FRICTION LOSS: g - h - i				10.24	psi
			TOTAL EQUIVALENT PIPE LENGTH					
550	FT		LENGTH X 1.25				687.50	ft
			MAXIMUM FRICTION LOSS PRESSURE AVAILABLE x 100'/EQUIV. LENGTH				1.49	psi
			DOMESTIC WATER MAINS AND BRANCHES SERVING SECTORS B AND C ONLY					
			TOTAL EQUIVALENT PIPE LENGTH					
405	FT		LENGTH X 1.25				506.25	ft
			MAXIMUM FRICTION LOSS PRESSURE AVAILABLE x 100'/EQUIV. LENGTH				2.02	psi
			SERVICE SIZE FROM METER TO BUILDING				4"	
			DOMESTIC WATER MAINS AND BRANCHES SERVING SECTORS B AND C FIRST FLOOR ONLY					
			TOTAL EQUIVALENT PIPE LENGTH					
405	FT		LENGTH X 1.25				506.25	ft
	i.		STATIC HEAD LOSS: 0.434 PSI / FT X 6	FT. RISE			2.60	psi
	m.		PRESSURE AVAILABLE FOR FRICTION LOSS: k + h - i				22.40	psi
			MAXIMUM FRICTION LOSS PRESSURE AVAILABLE x 100'/EQUIV. LENGTH				4.42	psi
			SERVICE SIZE FROM METER TO BUILDING				4"	

BRIC ARCHITECTURE, INC.
1233 NW NORTHRUP STREET, SUITE 100
PORTLAND, OR 97209 T 503.595.4900

New Middle School / High School
Seaside School District
1801 S. FRANKLIN STREET, SEASIDE, OR 97138
t: 503-738-5591

REGISTERED PROFESSIONAL ENGINEER 17430 OREGON SEPT. 28, 2012 ANDREW W. FRASTIL
EXPIRES: 12/31/19

k e y p l a n

phase	Bid Package 2
date	6/20/2018
revisions	
BP2 - ADD 1	07/03/2018
project #	17007

CALCULATIONS - PLUMBING

P0.03U

PROJECT 2017-0257
CONTACT Scott Holum
INTERFACE ENGINEERING
100 SW Main St.
Suite 1600
Portland, OR 97204
TEL 503.382.2266
FAX 503.382.2262
www.interfaceengineering.com

7/5/2018 7:54:37 AM
C:\Users\StuartG\Documents\SSD MSHS Central-V17_StuartG@interfaceeng.com.rvt

SHEET KEYNOTES

1. CONNECT TO SITE UTILITIES. FOR CONTINUATION OF UTILITY REFER TO CIVIL ENGINEER'S SITE UTILITY DRAWINGS.
2. PIPING EXTENDED DOWN IN PIPE SLEEVE THROUGH MAT SLAB, SEE SHEET P1.01 FOR CONTINUATION.
3. SEE SHEET P1.01 FOR CONTINUATION.
4. AT ENTRANCE TO BUILDING PROVIDE SANITARY PIPING WITH SEISMIC JOINT FITTING, EBAA IRON INC. 'FLEX-TEND' FLEXIBLE EXPANSION JOINT OR APPROVED EQUAL.
5. AT ENTRANCE TO BUILDING PROVIDE FIRE WATER PIPING WITH SEISMIC JOINT FITTING, EBAA IRON INC. 'FLEX-TEND' FLEXIBLE EXPANSION JOINT OR APPROVED EQUAL.

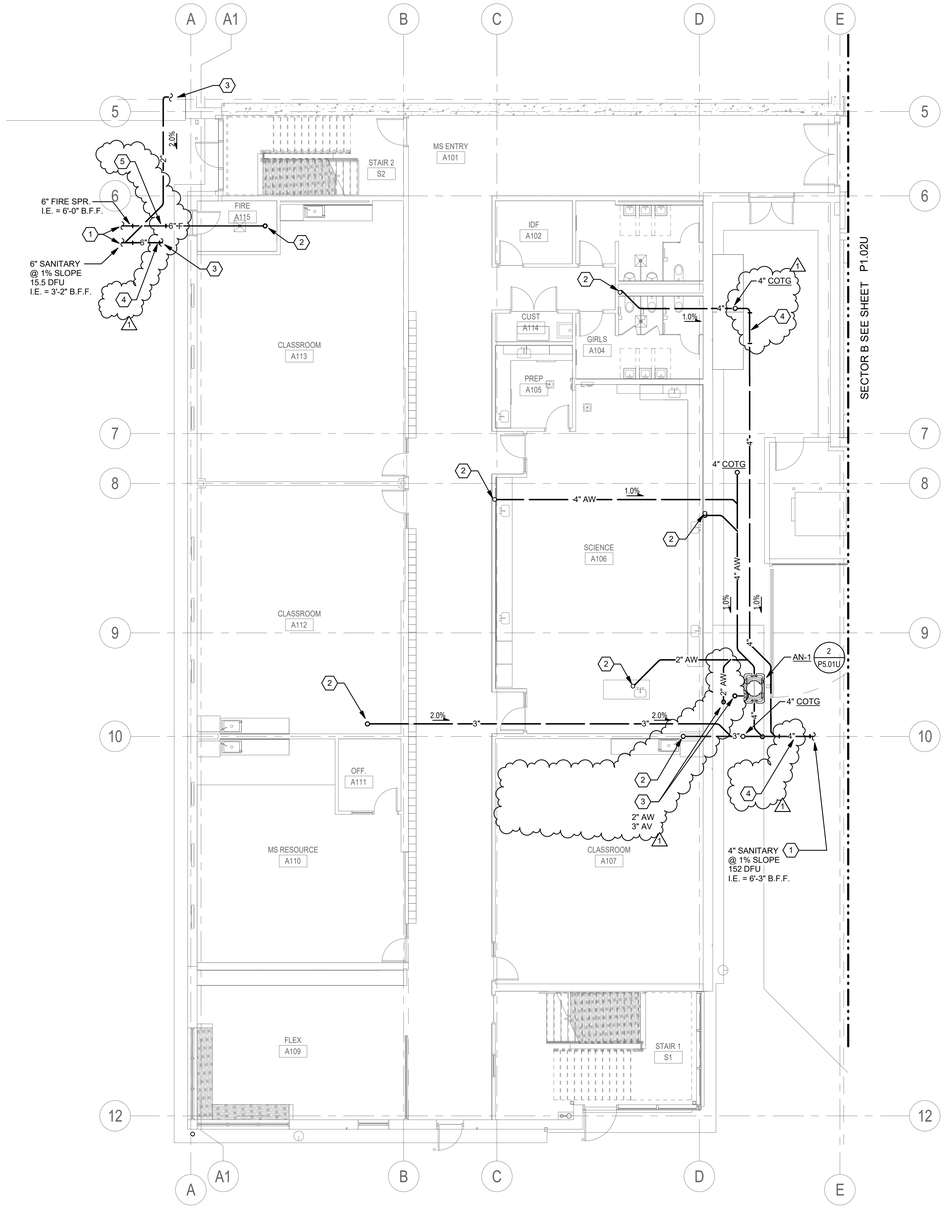

1 FLOOR PLAN LEVEL 1 - BELOW MAT SLAB- SECTOR A1 - PLUMBING

0' 4' 8' 16'
1/8" = 1'-0"

NORTH

BRIC ARCHITECTURE, INC.
1233 NW NORTHRUP STREET, SUITE 100
PORTLAND, OR 97209 T 503.595.4900

New Middle School / High School

Seaside School District
1801 S. FRANKLIN STREET, SEASIDE, OR 97138
t: 503-738-5591

REGISTERED PROFESSIONAL ENGINEER 17430 OREGON SEPT. 28, 2004 ANDREW W. FRICHTL
EXPIRES: 12/31/19

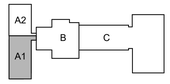

key plan

phase	Bid Package 2
date	6/20/2018
revisions	
BP2 - ADD 1	07/03/2018
project #	17007

FLOOR PLAN LEVEL 1 - BELOW MAT SLAB - SECTOR A1 - PLUMBING

P1.01U

PROJECT 2017-0257
CONTACT Scott Holum
INTERFACE ENGINEERING
100 SW Main St.
Suite 1600
Portland, OR 97204
TEL 503.382.2266
FAX 503.382.2262
www.interfaceengineering.com

7/5/2018 7:54:40 AM
C:\Users\StuartI\Documents\SSD MSHS Central-V17_StuartG@interfaceeng.com.rvt

SHEET KEYNOTES

1. CONNECT TO SITE UTILITIES. FOR CONTINUATION OF UTILITY REFER TO CIVIL ENGINEER'S SITE UTILITY DRAWINGS.
2. PIPING EXTENDED DOWN IN PIPE SLEEVE THROUGH MAT SLAB, SEE SHEET P1.02 FOR CONTINUATION.
3. SEE SHEET P4.01U FOR CONTINUATION.
4. PIPING CROSSES ELECTRICAL CONDUITS BELOW MAT SLAB. COORDINATE WITH ELECTRICAL CONTRACTOR.
5. PIPING EXTENDED DOWN IN PIPE SLEEVE THROUGH MAT SLAB, SEE SHEET P4.01U FOR CONTINUATION.
6. APPROXIMATE LOCATION OF GI-1, COORDINATE WITH CIVIL. SEE CIVIL ENGINEER'S SITE UTILITY DRAWINGS.
7. AT ENTRANCE TO BUILDING PROVIDE SANITARY PIPING WITH SEISMIC JOINT FITTING, EBAA IRON INC. 'FLEX-TEND' FLEXIBLE EXPANSION JOINT OR APPROVED EQUAL.

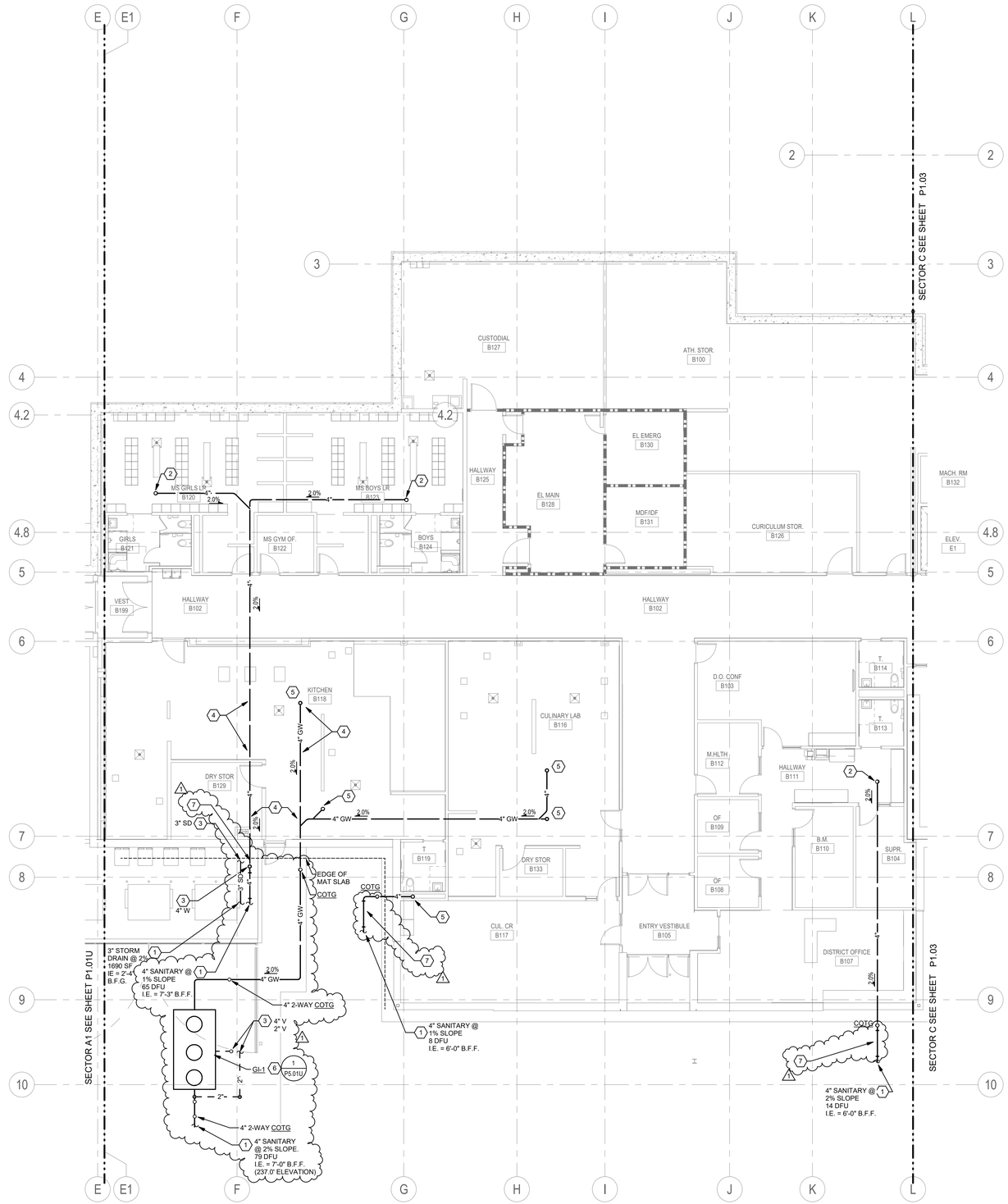

1 FLOOR PLAN LEVEL 1 - BELOW MAT SLAB - SECTOR B - PLUMBING

0' 4' 8' 16'
1/8" = 1'-0"

NORTH

BRIC ARCHITECTURE, INC.
1233 NW NORTHRUP STREET, SUITE 100
PORTLAND, OR 97209 T 503.595.4900

New Middle School / High School

Seaside School District
1801 S. FRANKLIN STREET, SEASIDE, OR 97138
t: 503-738-5591

REGISTERED PROFESSIONAL ENGINEER 17430 OREGON SEPT. 28, 2012 ANDREW W. FRICHTL
EXPIRES: 12/31/19

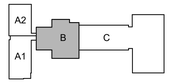

key plan

phase	Bid Package 2
date	6/20/2018
revisions	
BP2 - ADD 1	07/03/2018
project #	17007

FLOOR PLAN LEVEL 1 - BELOW MAT SLAB - SECTOR B - PLUMBING

P1.02U

PROJECT 2017-0257
CONTACT Scott Holum
INTERFACE ENGINEERING
100 SW Main St.
Suite 1600
Portland, OR 97204
TEL 503.382.2266
FAX 503.382.2262
www.interfaceengineering.com

7/5/2018 7:54:45 AM
C:\Users\StuartG\Documents\SSD MSHS Central-V17_StuartG@interfaceeng.com.rvt

SHEET KEYNOTES

1. CONNECT TO SITE UTILITIES. FOR CONTINUATION OF UTILITY REFER TO CIVIL ENGINEER'S SITE UTILITY DRAWINGS.
2. PIPING EXTENDED DOWN IN PIPE SLEEVE THROUGH MAT SLAB, SEE SHEET P1.03 FOR CONTINUATION.
3. SEE SHEET P1.03 FOR CONTINUATION.
4. PIPING CROSSES ELECTRICAL CONDUITS BELOW MAT SLAB. COORDINATE WITH ELECTRICAL CONTRACTOR.
5. AT ENTRANCE TO BUILDING PROVIDE SEISMIC JOINT FITTING ON SANITARY PIPING, EBAA IRON INC. 'FLEX-TEND' FLEXIBLE EXPANSION JOINT OR APPROVED EQUAL.

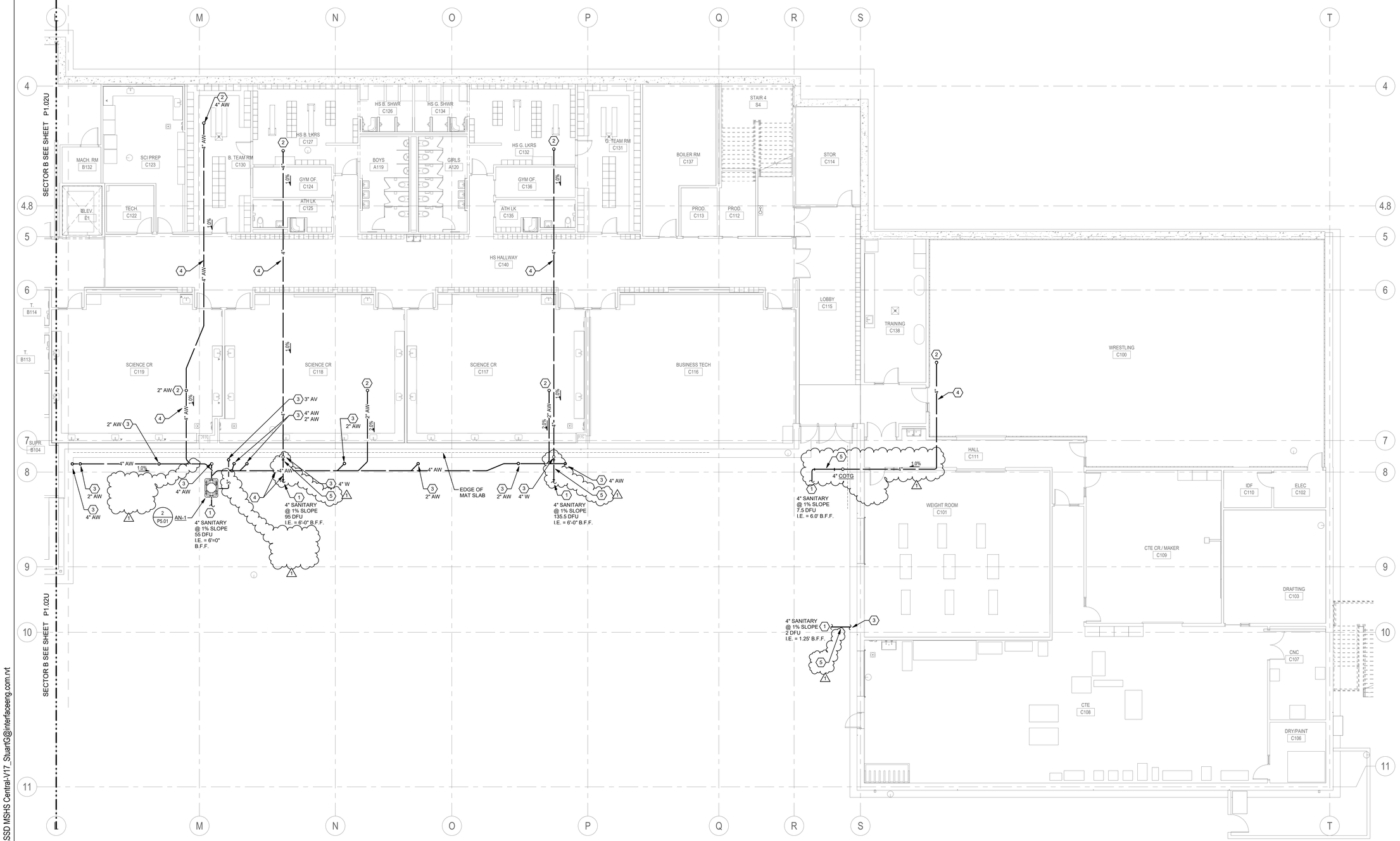

1 FLOOR PLAN LEVEL 1 - BELOW MAT SLAB - SECTOR C - PLUMBING

0' 4' 8' 16'
1/8" = 1'-0"

NORTH

PROJECT 2017-0257
CONTACT Scott Holum
INTERFACE ENGINEERING
100 SW Main St.
Suite 1600
Portland, OR 97204
TEL 503.382.2266
FAX 503.382.2262
www.interfaceengineering.com

BR|IC ARCHITECTURE, INC.
1233 NW NORTHRUP STREET, SUITE 100
PORTLAND, OR 97209 T 503.595.4900

New Middle School / High School
Seaside School District
1801 S. FRANKLIN STREET, SEASIDE, OR 97138
t: 503-738-5591

REGISTERED PROFESSIONAL ENGINEER 17430 OREGON SEPT. 28, 2004 ANDREW W. FRICHTL
EXPIRES: 12/31/19

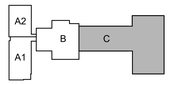

key plan

phase	Bid Package 2
date	6/20/2018
revisions	
BP2 - ADD 1	07/03/2018
project #	17007

FLOOR PLAN LEVEL 1 - BELOW MAT SLAB - SECTOR C - PLUMBING

P1.03U

7/5/2018 7:54:51 AM
C:\Users\StuartD\Documents\SSD MSHS Central-V17_StuartG@interfaceeng.com.rvt

SHEET KEYNOTES

1. CONNECT TO SITE UTILITIES. FOR CONTINUATION OF UTILITY REFER TO CIVIL ENGINEER'S SITE UTILITY DRAWINGS.
2. CONNECT 4" VERTICAL STORM DRAIN PIPING TO DOWNSPOUT. TRANSITION TO 6" HORIZONTAL PIPING BELOW GRADE. ROUTE HORIZONTAL STORM DRAIN PIPING OVER TOP OF MAT SLAB THEN OFFSET DOWN AS REQUIRED TO ACHIEVE MINIMUM 2'-0" COVER.
3. EXTEND PIPING UP THROUGH TOP SLAB. PROVIDE PIPE STUB ABOVE SLAB FOR FUTURE EXTENSION.
4. WALL CLEANOUT TO BE PROVIDED UPSTREAM OF THIS LOCATION ON ABOVE SLAB WASTE PIPING.
5. ROUTE PIPING OVER TOP OF STRUCTURAL FOOTING / MAT SLAB THEN OFFSET DOWN AS REQUIRED TO OBTAIN MINIMUM 2'-0" BURY DEPTH.
6. SEE SHEET P1.01U FOR CONTINUATION.
7. EXTEND PIPING DOWN IN PIPE SLEEVE THROUGH MAT SLAB, SEE SHEET P1.01U FOR CONTINUATION.
8. EXTEND FIRE SPRINKLER PIPING DOWN IN 10" PIPE SLEEVE THROUGH MAT SLAB, SEE SHEET P1.01U FOR CONTINUATION.
9. PIPING ROUTED IN SPACE BETWEEN MAT SLAB AND TOP SLAB.
10. FIXTURE P-TRAP REQUIRES BLOCK-OUT IN STRUCTURAL SLAB. COORDINATE BLOCK-OUT SIZE AND LOCATION WITH STRUCTURAL ENGINEER.

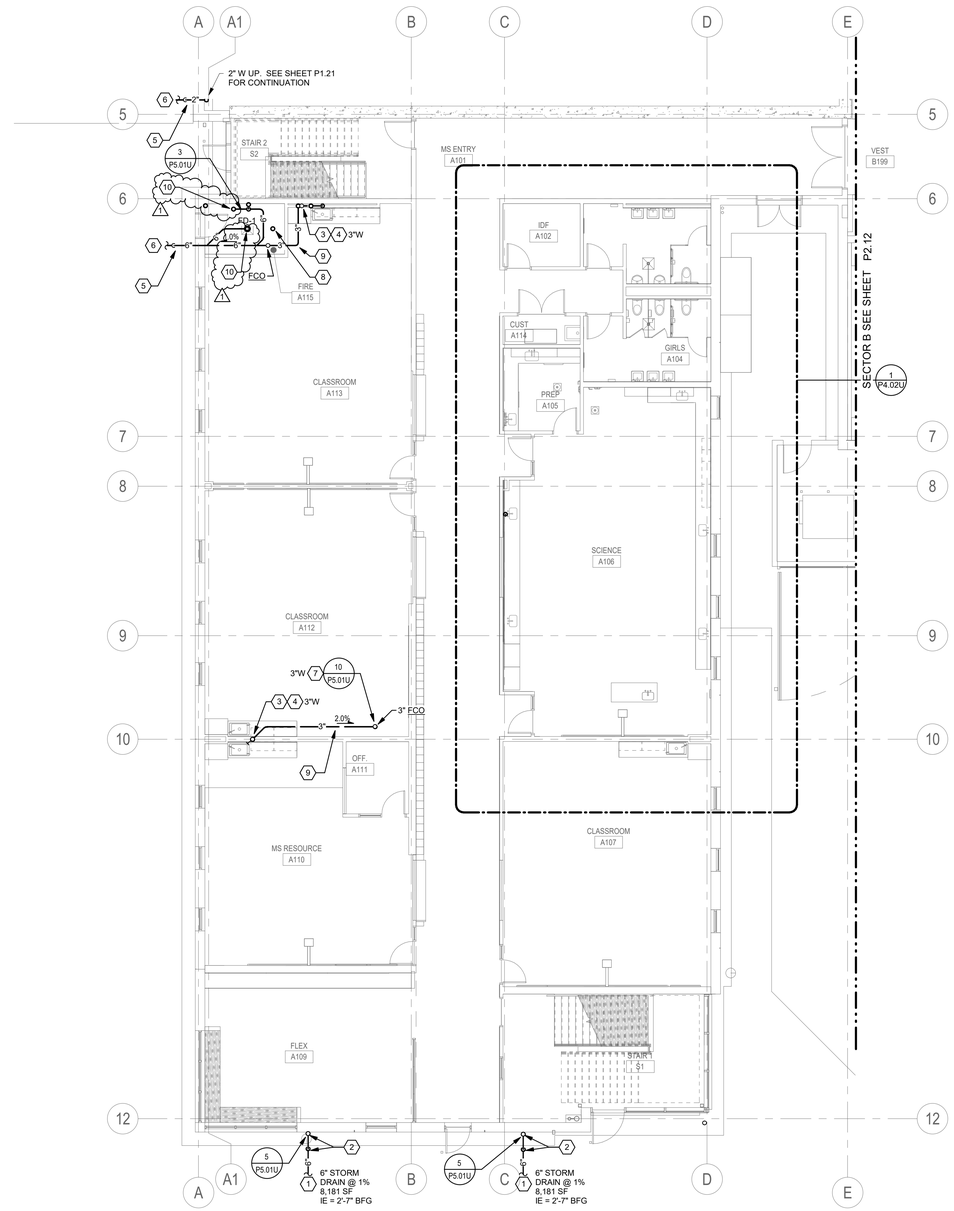

1 FLOOR PLAN LEVEL 1 - BELOW SLAB - SECTOR A1 - PLUMBING

0' 4' 8' 16'
1/8" = 1'-0"

NORTH

BR|IC ARCHITECTURE, INC.
1233 NW NORTHRUP STREET, SUITE 100
PORTLAND, OR 97209 T 503.595.4900

New Middle School / High School

Seaside School District
1801 S. FRANKLIN STREET, SEASIDE, OR 97138
t: 503-738-5591

REGISTERED PROFESSIONAL ENGINEER 17430 OREGON SEPT. 28, 2012 ANDREW W. FRIGHTLI
EXPIRES: 12/31/19

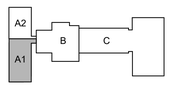

key plan

phase	Bid Package 2
date	6/20/2018
revisions	
BP2 - ADD 1	07/03/2018
project #	17007

FLOOR PLAN LEVEL 1 - BELOW SLAB - SECTOR A1 - PLUMBING

P1.01

PROJECT 2017-0257
CONTACT Scott Holum
INTERFACE ENGINEERING
100 SW Main St.
Suite 1600
Portland, OR 97204
TEL 503.382.2266
FAX 503.382.2262
www.interfaceengineering.com

7/5/2018 7:54:38 AM
C:\Users\StuartG\Documents\SSD MSHS Central-V17_StuartG@interfaceeng.com.rvt

SHEET KEYNOTES

1. CONNECT TO SITE UTILITIES. FOR CONTINUATION OF UTILITY REFER TO CIVIL ENGINEER'S SITE UTILITY DRAWINGS.
2. SEE SHEET P1.03U FOR CONTINUATION.
3. CONNECT 4" VERTICAL STORM DRAIN PIPING TO DOWNSPOUT. TRANSITION TO 6" HORIZONTAL PIPING BELOW GRADE. ROUTE HORIZONTAL STORM DRAIN PIPING OVER TOP OF MAT SLAB THEN OFFSET DOWN AS REQUIRED TO ACHIEVE MINIMUM 2'-0" COVER.
4. EXTEND PIPING DOWN IN PIPE SLEEVE THROUGH MAT SLAB. SEE SHEET P1.03U FOR CONTINUATION.
5. SLEEVE PIPING THROUGH WALL AND CAP IN LEVEL 1 CEILING SPACE FOR FUTURE EXTENSION.
6. EXTEND PIPING UP THROUGH TOP SLAB, SEE SHEET P1.23 FOR CONTINUATION.
7. EXTEND PIPING UP THROUGH TOP SLAB. PROVIDE PIPE STUB ABOVE SLAB FOR FUTURE EXTENSION.
8. WALL CLEANOUT TO BE PROVIDED UPSTREAM OF THIS LOCATION ON ABOVE SLAB WASTE PIPING.
9. NATURAL GAS SERVICE UP TO NATURAL GAS METER ASSEMBLY. COORDINATE LOCATION AND INSTALLATION WITH SERVING UTILITY.
10. FIXTURE P-TRAP REQUIRES BLOCK-OUT IN STRUCTURAL SLAB. COORDINATE BLOCK-OUT SIZE AND LOCATION WITH STRUCTURAL ENGINEER.

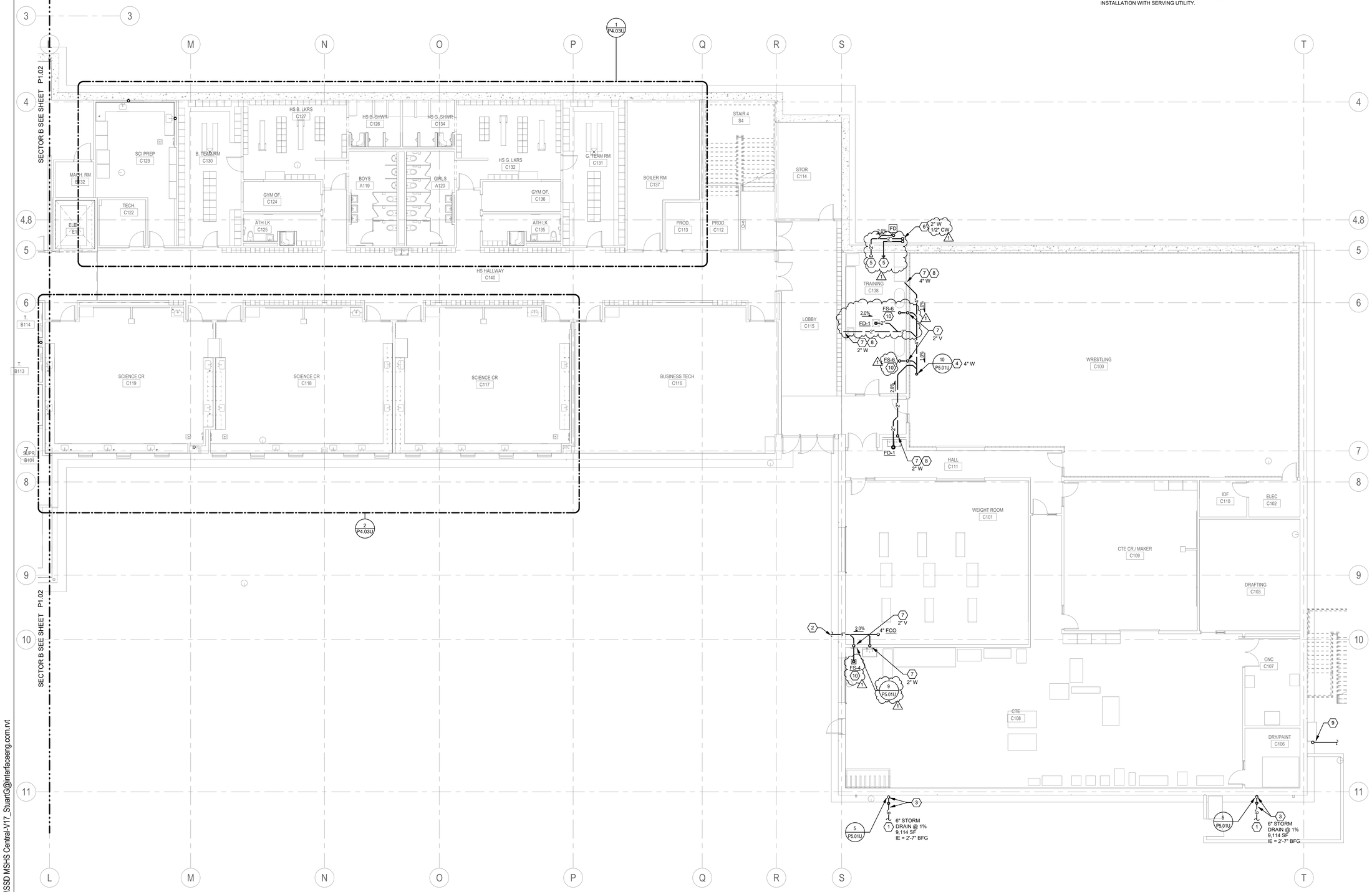

1 FLOOR PLAN LEVEL 1 - BELOW SLAB - SECTOR C - PLUMBING

0' 4' 8' 16'
1/8" = 1'-0"

NORTH

PROJECT 2017-0257
CONTACT Scott Holum
INTERFACE ENGINEERING
100 SW Main St.
Suite 1600
Portland, OR 97204
TEL 503.382.2266
FAX 503.382.2267
www.interfaceengineering.com

BR|IC ARCHITECTURE, INC.
1233 NW NORTHRUP STREET, SUITE 100
PORTLAND, OR 97209 T 503.595.4900

New Middle School / High School
Seaside School District
1801 S. FRANKLIN STREET, SEASIDE, OR 97138
t: 503-738-5591

REGISTERED PROFESSIONAL ENGINEER 17430 OREGON SEPT. 28, 1990 ANDREW W. FRECHTL
EXPIRES: 12/31/19

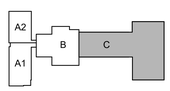

key plan

phase	Bid Package 2
date	6/20/2018
revisions	
BP2 - ADD 1	07/03/2018
project #	17007

FLOOR PLAN LEVEL 1 - BELOW SLAB - SECTOR C - PLUMBING

P1.03

7/5/2018 7:54:48 AM
C:\Users\Stuart\Documents\SSD MSHS Central-V17_Stuart@interfaceeng.com.rvt

SHEET KEYNOTES

1. CONNECT TO SITE UTILITIES. FOR CONTINUATION OF UTILITY REFER TO CIVIL ENGINEER'S SITE UTILITY DRAWINGS.
2. SEE 1/P4.03U FOR CONTINUATION.
3. PIPING UP FROM BELOW SLAB, SEE SHEET P1.03U FOR CONTINUATION. CAP ABOVE SLAB FOR FUTURE EXTENSION.

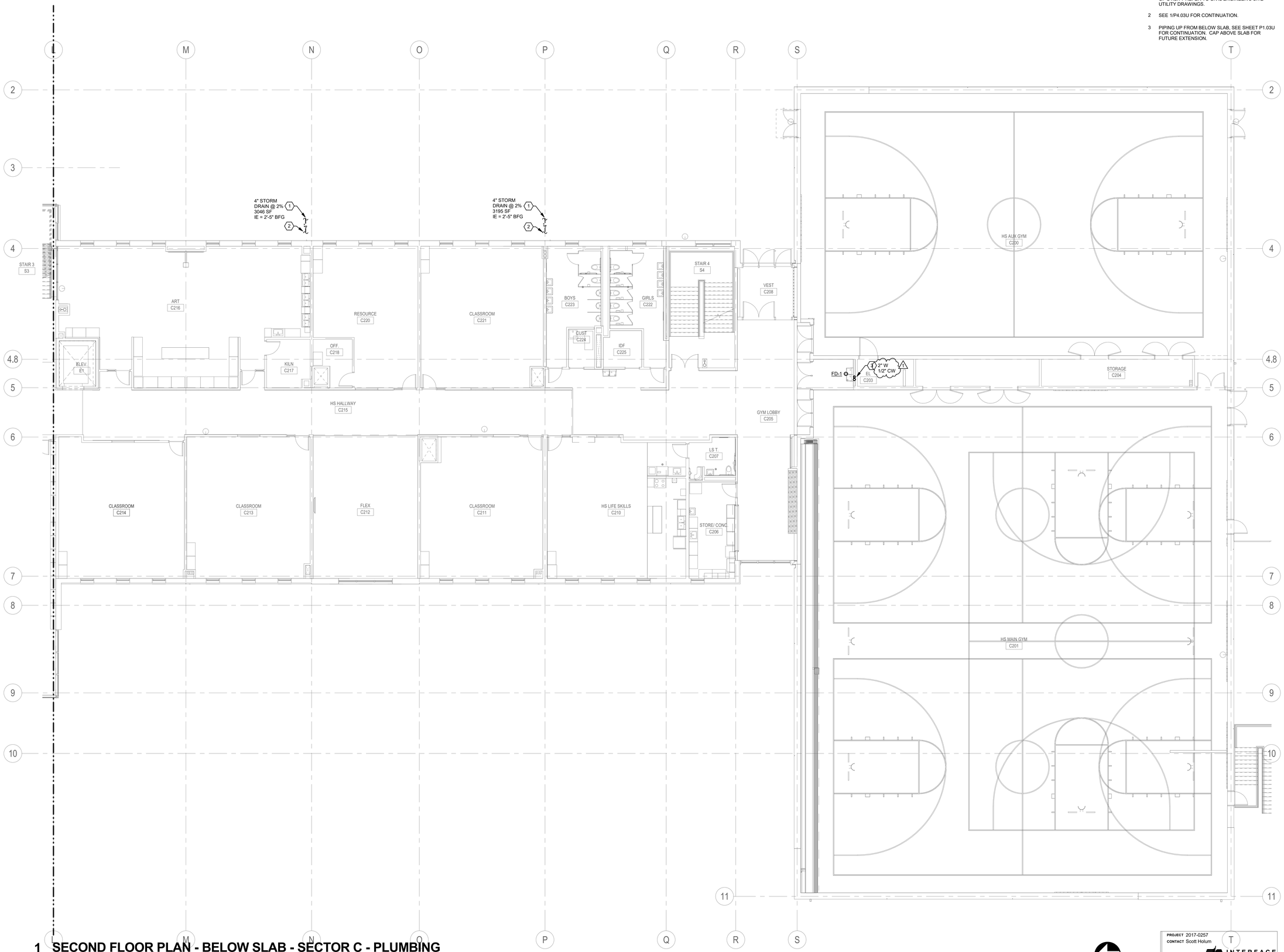

1 SECOND FLOOR PLAN - BELOW SLAB - SECTOR C - PLUMBING

0' 4' 8' 16'
1/8" = 1'-0"

NORTH

PROJECT 2017-0257
CONTACT Scott Holum

INTERFACE ENGINEERING
100 SW Main St.
Suite 1600
Portland, OR 97204
TEL 503.382.2266
FAX 503.382.2262
www.interfaceengineering.com

BR|IC ARCHITECTURE, INC.
1233 NW NORTHRUP STREET, SUITE 100
PORTLAND, OR 97209 T 503.595.4900

New Middle School / High School
Seaside School District
1801 S. FRANKLIN STREET, SEASIDE, OR 97138
t: 503-738-5591

REGISTERED PROFESSIONAL ENGINEER 17430 OREGON SEPT. 28, 1984 ANDREW W. FRICHTL
EXPIRES: 12/31/19

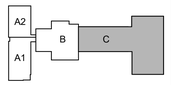

key plan

phase	Bid Package 2
date	6/20/2018
revisions	
BP2 - ADD 1	07/03/2018
project #	17007

FLOOR PLAN LEVEL 2 - BELOW SLAB - SECTOR C - PLUMBING

P1.23

7/5/2018 7:54:56 AM
C:\Users\StuartC\Documents\SSD MSHS Central-V17_StuartC@interfaceeng.com.rvt

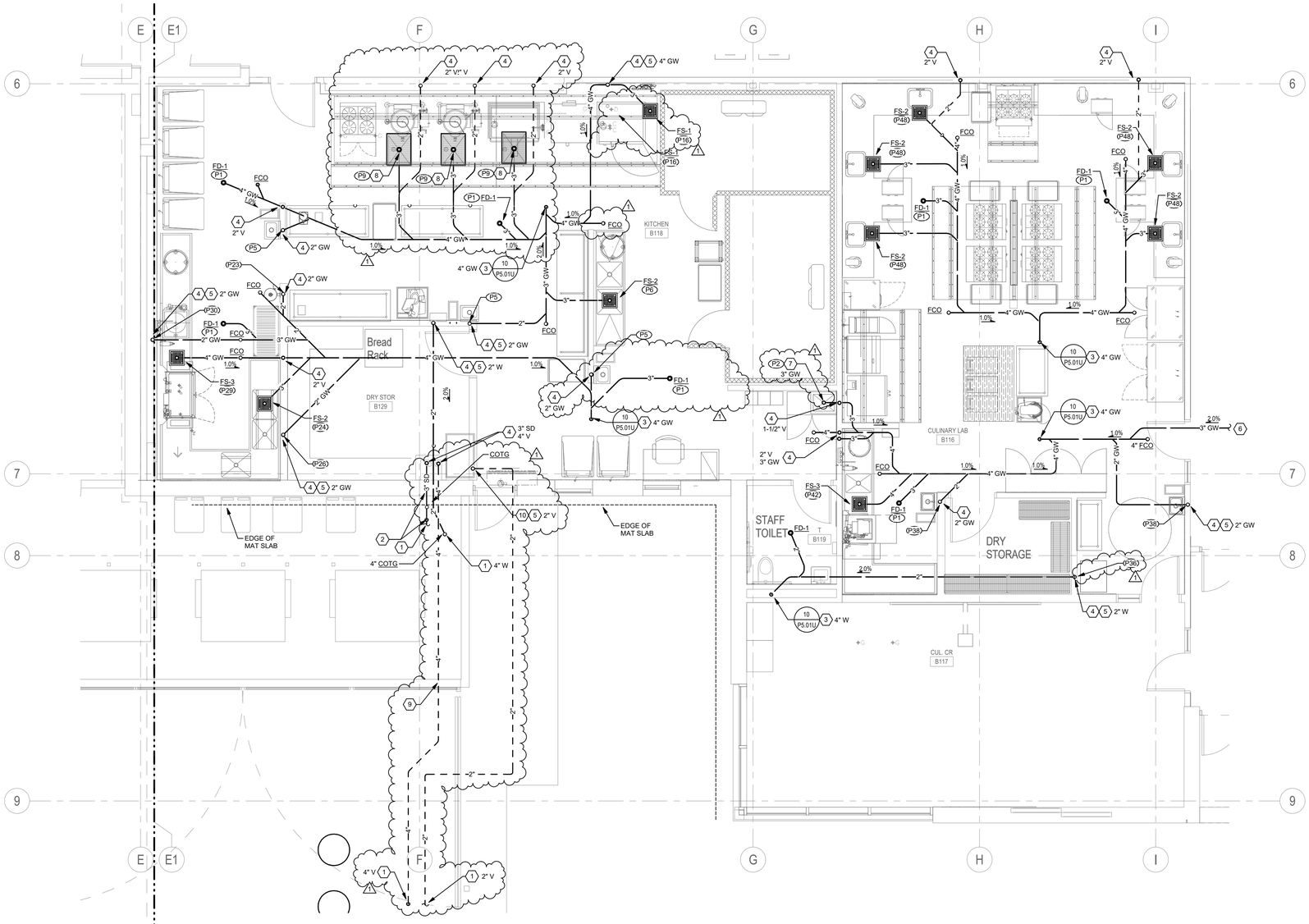

1 ENLARGED FIRST FLOOR KITCHEN AND CULINARY LAB FLOOR PLAN - BELOW SLAB - PLUMBING

0' 2' 4' 8'
1/4" = 1'-0"

NORTH

SHEET KEYNOTES

1. SEE SHEET P1.02U FOR CONTINUATION.
2. ROUTE STORM DRAIN PIPING OVER TOP OF MAT SLAB THEN OFFSET DOWN AS REQUIRED TO ACHIEVE MINIMUM 2'-0" COVER.
3. EXTEND PIPING DOWN IN PIPE SLEEVE THROUGH MAT SLAB. SEE SHEET P1.02U FOR CONTINUATION.
4. EXTEND PIPING UP THROUGH TOP SLAB. PROVIDE PIPE STUB ABOVE SLAB FOR FUTURE EXTENSION.
5. WALL CLEANOUT TO BE PROVIDED UPSTREAM OF THIS LOCATION ON ABOVE SLAB WASTE PIPING.
6. SEE SHEET P1.02 FOR CONTINUATION.
7. PROVIDE WASTE PIPE STUB FOR CONNECTION TO DRAIN OUTLET OF MOP SINK TO BE PROVIDED IN BP4. COORDINATE EXACT LOCATION WITH POINT OF CONNECTION TO MOP SINK DRAIN.
8. PROVIDE WASTE PIPE STUB FOR CONNECTION TO DRAIN OUTLET OF FLOOR TROUGH TO BE PROVIDED IN BP4. COORDINATE EXACT LOCATION WITH POINT OF CONNECTION TO TROUGH DRAIN.
9. ROUTE 4" GREASE INTERCEPTOR VENT PIPING THROUGH STEM WALL OVER TOP OF STRUCTURAL FOOTING, COORDINATE WITH STRUCTURAL ENGINEER.
10. EXTEND PIPING UP THROUGH TOP SLAB, ROUTE TO AVOID CONFLICT WITH ELECTRICAL PANEL IN WALL ABOVE SLAB. COORDINATE WITH ELECTRICAL CONTRACTOR. PROVIDE PIPE STUB ABOVE SLAB FOR FUTURE EXTENSION.

SEASIDE HEIGHTS MS / HS FOOD SERVICE FIXTURE CONNECTION SCHEDULE

SYMBOL	FIXTURE	CONNECTION SIZE GAS	CW	HW	W	IND. W	V	REMARKS
P1	AREA DRAIN				SEE DWGS		SEE DWGS	
P2	JANITORS SINK				3"		1-1/2"	REQUIREMENTS BY DIVISION 22
P3	JANITORS SINK		1/2"	1/2"				REQUIREMENTS BY DIVISION 22
P4	HAND WASHING SINK		1/2"	1/2"				20 GPH HOT
P5	HAND WASHING SINK				1-1/2"	1 SEE DWGS		
P6	(1) SINK DRAIN					F.S.		NO GRATE*
P7	SINK FAUCET		1/2"	1/2"				20 GPH HOT
P8	4-OPEN BURNER RANGE	3/4"						180M BTU TOTAL - QUICK DISCONNECT
P9	FLOOR TROUGH					T.D.		CONNECT TO GREASE INTERCEPTOR.
P10	25-GALLON TILTING KETTLE	3/4"						80M BTU TOTAL - QUICK DISCONNECT
P11	40-QUART TILTING KETTLE FILL FAUCET		1/2"	1/2"				20 GPH HOT
P12	40-QUART TILTING KETTLE PANTRY FAUCET		1/2"	1/2"				20 GPH HOT
P13	DOUBLE STACKED CONVECTION OVENS	3/4"						55M BTU EACH CONNECTION - QUICK DISCONNECTS
P14	DOUBLE STACKED COMBI-OVEN STEAMERS		3/4" (STACKED)					FOR CONDENSER
P15	DOUBLE STACKED COMBI-OVEN STEAMERS		3/4" (STACKED)					FOR BOILER - SUPPLY FROM P18
P16	DOUBLE STACKED COMBI-OVEN STEAMERS AND WALK-IN EVAPORATOR DRAINS.					F.S.		THREE-QUARTER GRATE* 1
P17	NOT USED.							
P18	WATER FILTRATION SYSTEM		1/2"					INTERCONNECT W/COMBI-OVEN STEAMER (P15)
P19	NOT USED							
P20	NOT USED							
P21	NOT USED							
P22	EYE WASH STATION							REQUIREMENTS BY DIVISION 15
P23	EYE WASH STATION							REQUIREMENTS BY DIVISION 15
P24	(1) SINK DRAIN					F.S.		NO GRATE*
P25	SINK FAUCETS		1/2"	1/2"				20 GPH HOT
P26	(2) SINK DRAINS				2"			CONNECT TO GREASE INTERCEPTOR
P27	WAREWASHER WITH BOOSTER HEATER			1/2"				126 GPH HOT AT 20 PSI
P28	WAREWASHER DRAIN WATER TEMPERING		1/2"					
P29	WAREWASHER WITH BOOSTER HEATER					F.S.		NO GRATE*
P30	WASTE COLLECTOR				2"			
P31	WASTE COLLECTOR		3/4"	3/4"				50 GPH HOT
P32	HOSE REEL WITH RECESSED CONTROL CABINET		1/2"	1/2"				40 GPH HOT

REFER TO FOOD SERVICE CONSULTANT'S DRAWINGS FOR KITCHEN FIXTURE / EQUIPMENT CONNECTION SIZES AND LOCATIONS.
* COORDINATE GRATE REQUIREMENTS WITH FOOD SERVICE CONSULTANT.

SEASIDE HEIGHTS MS / HS FOOD SERVICE FIXTURE CONNECTION SCHEDULE

SYMBOL	FIXTURE	CONNECTION SIZE GAS	CW	HW	W	IND. W	V	REMARKS
P36	WASHER (CULINARY ARTS)							VERIFY REQUIREMENTS FOR OWNER FURNISHED EQUIPMENT.
P37	HAND WASHING SINK (CULINARY ARTS)		1/2"	1/2"				20 GPH HOT
P38	HAND WASHING SINK (CULINARY ARTS)				1-1/2"			
P39	VENTLESS WAREWASHER (CULINARY ARTS)			1/2"				29.6 GPH HOT AT 20 PSI
P40	VENTLESS WAREWASHER (CULINARY ARTS)		1/2"					
P41	WAREWASHER DRAIN TEMP. KIT (CULINARY ARTS)		1/2"					
P42	VENTLESS WAREWASHER (CULINARY ARTS)					F.S.		(1) SINK DRAIN. NO GRATE*
P43	SINK FAUCET		1/2"	1/2"				20 GPH HOT
P44	HOSE REEL WITH RECESSED CONTROL CABINET		1/2"	1/2"				40 GPH HOT
P45	36" GRIDDLE WITH STAND (CULINARY ARTS)	3/4"						96M BTU TOTAL CONNECTION - QUICK DISCONNECT
P46	FRYER WITH FILTRATION SYSTEM (CULINARY ARTS)	3/4"						70M BTU TOTAL CONNECTION - QUICK DISCONNET
P47	SINK FAUCET		1/2"	1/2"				20 GPH HOT
P48	(1) SINK DRAIN					F.S.		NO GRATE*
P49	OPEN BURNER RANGE (CULINARY ARTS)	3/4"						184M BTU TOTAL CONNECTION - QUICK DISCONNECT
P50	OPEN BURNER RANGE (CULINARY ARTS)	3/4"						184M BTU TOTAL CONNECTION - QUICK DISCONNECT

REFER TO FOOD SERVICE CONSULTANT'S DRAWINGS FOR KITCHEN FIXTURE / EQUIPMENT CONNECTION SIZES AND LOCATIONS.
* COORDINATE GRATE REQUIREMENTS WITH FOOD SERVICE CONSULTANT.

BR|IC ARCHITECTURE, INC.
1233 NW NORTHRUP STREET, SUITE 100
PORTLAND, OR 97209 T 503.595.4900

New Middle School / High School
Seaside School District
1801 S. FRANKLIN STREET, SEASIDE, OR 97138
t: 503-738-5591

REGISTERED PROFESSIONAL ENGINEER 17430 OREGON SEPT. 28, 2018 ANDREW W. FRICHTL
EXPIRES: 12/31/19

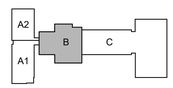

key plan

phase	Bid Package 2
date	6/20/2018
revisions	
BP2 - ADD 1	07/03/2018
project #	17007

ENLARGED FLOOR PLAN - BELOW SLAB - SECTOR B - PLUMBING

P4.01U

PROJECT 2017-0257
CONTACT Scott Holum
INTERFACE ENGINEERING
100 SW Main St.
Suite 1600
Portland, OR 97204
TEL 503.382.2266
FAX 503.382.2262
www.interfaceengineering.com

7/5/2018 7:54:59 AM
C:\Users\StuartG\Documents\SSD MSHS Central-V17_StuartG@interfaceeng.com.rvt

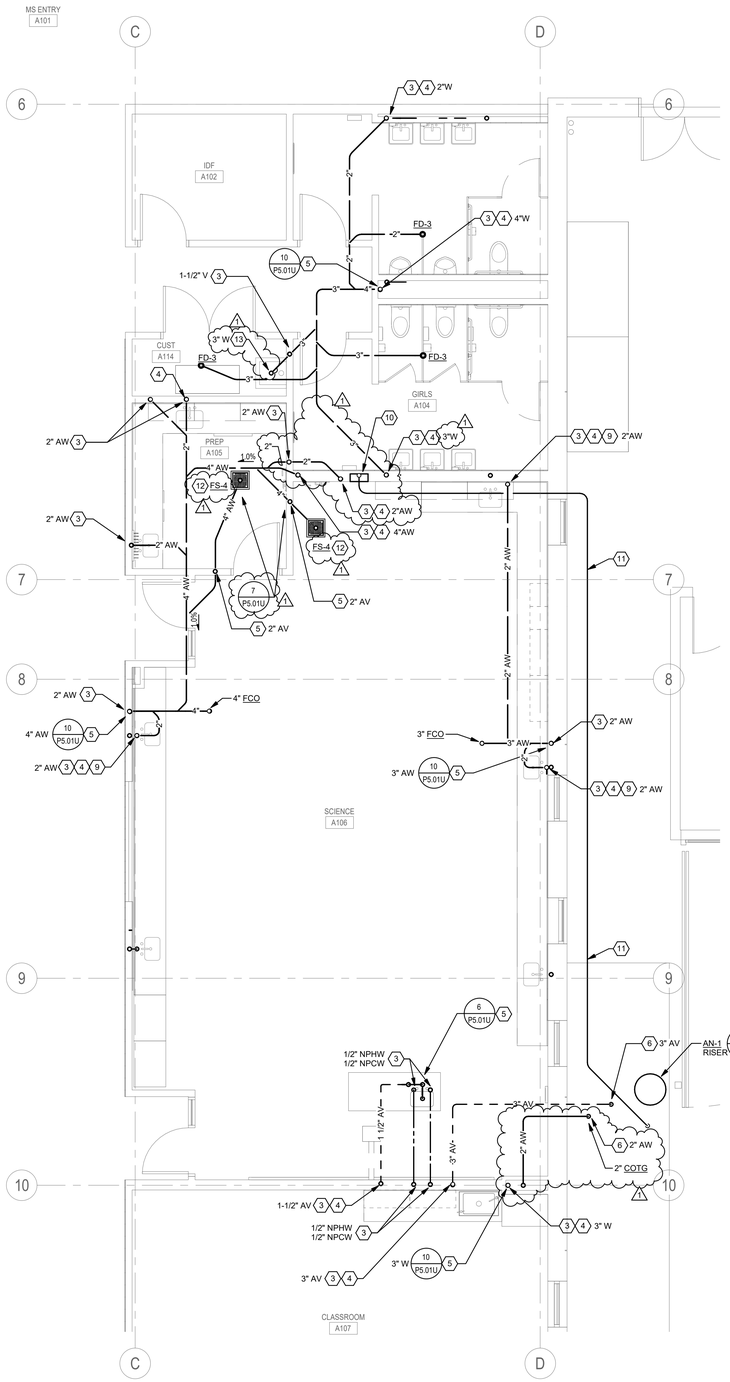

ENLARGED FIRST FLOOR SCIENCE AREA
1 AND RESTROOM PLAN - BELOW SLAB - SECTOR A - PLUMBING

0' 2' 4' 8'
1/4" = 1'-0"

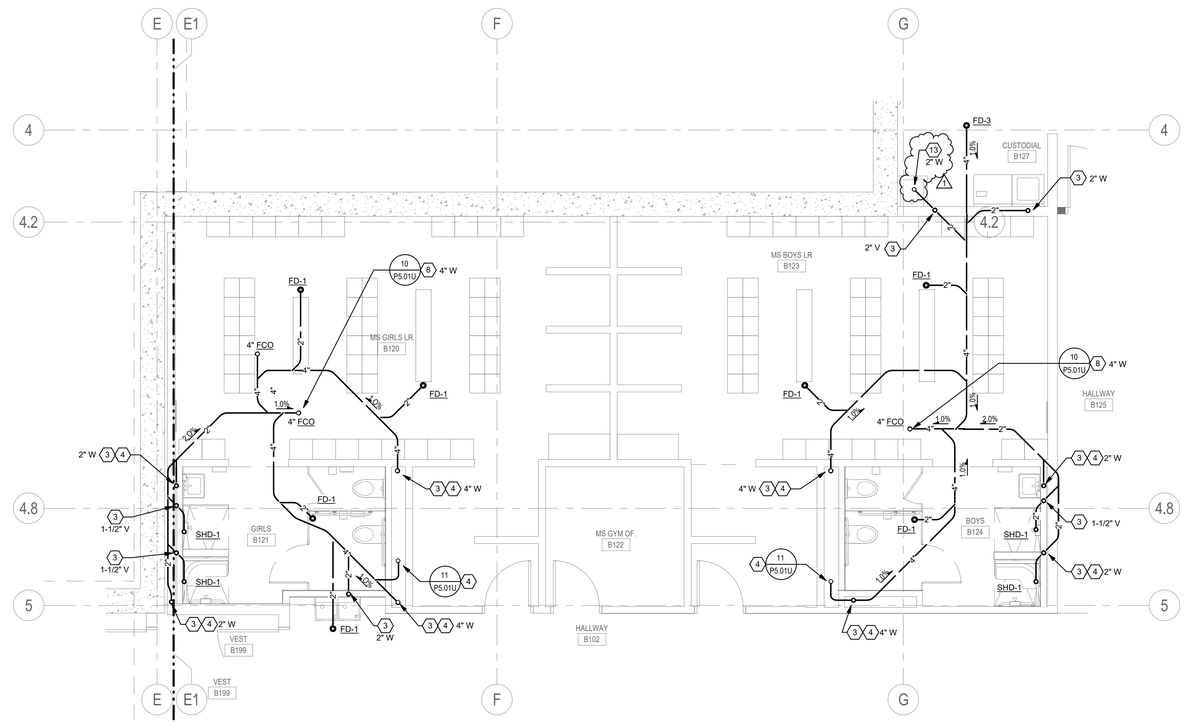

ENLARGED FIRST FLOOR MIDDLE SCHOOL
2 LOCKER AND TEAM ROOM PLAN - BELOW SLAB - SECTOR B - PLUMBING

0' 2' 4' 8'
1/4" = 1'-0"

SHEET KEYNOTES

1 CONNECT TO SITE UTILITIES. FOR CONTINUATION OF UTILITY REFER TO CIVIL ENGINEER'S SITE UTILITY DRAWINGS.

2 CONNECT 4" VERTICAL STORM DRAIN PIPING TO DOWNSPOUT. TRANSITION TO 6" HORIZONTAL PIPING BELOW GRADE. ROUTE HORIZONTAL STORM DRAIN PIPING OVER TOP OF MAT SLAB THEN OFFSET DOWN AS REQUIRED TO ACHIEVE MINIMUM 2'-0" COVER.

3 EXTEND PIPING UP THROUGH TOP SLAB. PROVIDE PIPE STUB ABOVE SLAB FOR FUTURE EXTENSION.

4 WALL CLEANOUT TO BE PROVIDED UPSTREAM OF THIS LOCATION ON ABOVE SLAB WASTE PIPING.

5 EXTEND PIPING DOWN IN PIPE SLEEVE THROUGH MAT SLAB, SEE SHEET P1.01U FOR CONTINUATION.

6 SEE SHEET P1.01U FOR CONTINUATION.

7 SEE SHEET P1.02U FOR CONTINUATION.

8 EXTEND PIPING DOWN IN PIPE SLEEVE THROUGH MAT SLAB, SEE SHEET P1.02U FOR CONTINUATION.

9 ABOVE SLAB PIPING SERVING SINKS IS TO BE ROUTED IN PLUMBING CHASE AT THE BACK OF THE SCIENCE AREA CASEWORK. COORDINATE LOCATION OF PIPE STUB WITH LOCATION OF PLUMBING CHASE.

10 LOCATION OF ACID NEUTRALIZATION COMMAND CENTER PH MONITOR. ROUTE CONDUIT FROM AN-1 BELOW GRADE PH SENSOR PLACMENT KIT TO LOCATION OF PH MONITOR AND STUB UP THROUGH SLAB FOR FUTURE EXTENSION.

11 PROVIDE AND INSTALL CONDUIT FOR WIRING FROM AN-1 PH SENSOR TO COMMAND CENTER PH MONITOR.

12 FIXTURE P-TRAP REQUIRES BLOCK-OUT IN STRUCTURAL SLAB. COORDINATE BLOCK-OUT SIZE AND LOCATION WITH STRUCTURAL ENGINEER.

13 PROVIDE WASTE PIPE STUB FOR CONNECTION TO DRAIN OUTLET OF MOP SINK TO BE PROVIDED IN BP4. COORDINATE EXACT LOCATION WITH POINT OF CONNECTION TO MOP SINK DRAIN.

BR|IC ARCHITECTURE, INC.
1233 NW NORTHRUP STREET, SUITE 100
PORTLAND, OR 97209 T 503.595.4900

New Middle School / High School
Seaside School District
1801 S. FRANKLIN STREET, SEASIDE, OR 97138
t: 503-738-5591

REGISTERED PROFESSIONAL ENGINEER 17430 OREGON SEPT. 28, 1994 ANDREW W. FRICHTL
EXPIRES: 12/31/19

key plan

phase	Bid Package 2
date	6/20/2018
revisions	
BP2 - ADD 1	07/03/2018
project #	17007

ENLARGED FLOOR PLANS - BELOW SLAB - SECTORS A AND B - PLUMBING

P4.02U

PROJECT 2017-0257
CONTACT Scott Holum
INTERFACE ENGINEERING
100 SW Main St.
Suite 1500
Portland, OR 97204
TEL 503.382.2266
FAX 503.382.2262
www.interfaceengineering.com

7/5/2018 7:55:02 AM
C:\Users\StuartO\Documents\SSD MSHS Central-V17_StuartO@interfaceeng.com.rvt

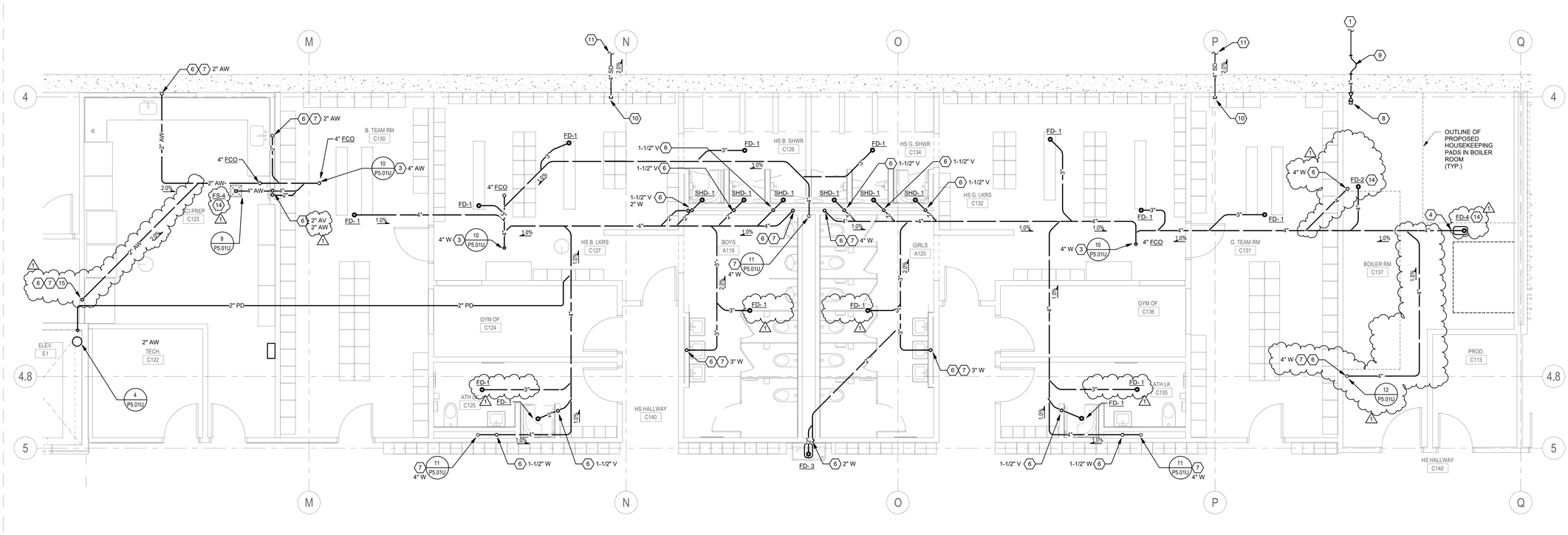

1 ENLARGED BOILER ROOM, RESTROOM, HIGH SCHOOL LOCKER AND TEAM ROOM PLAN - BELOW SLAB - SECTOR C - PLUMBING

1/4" = 1'-0"

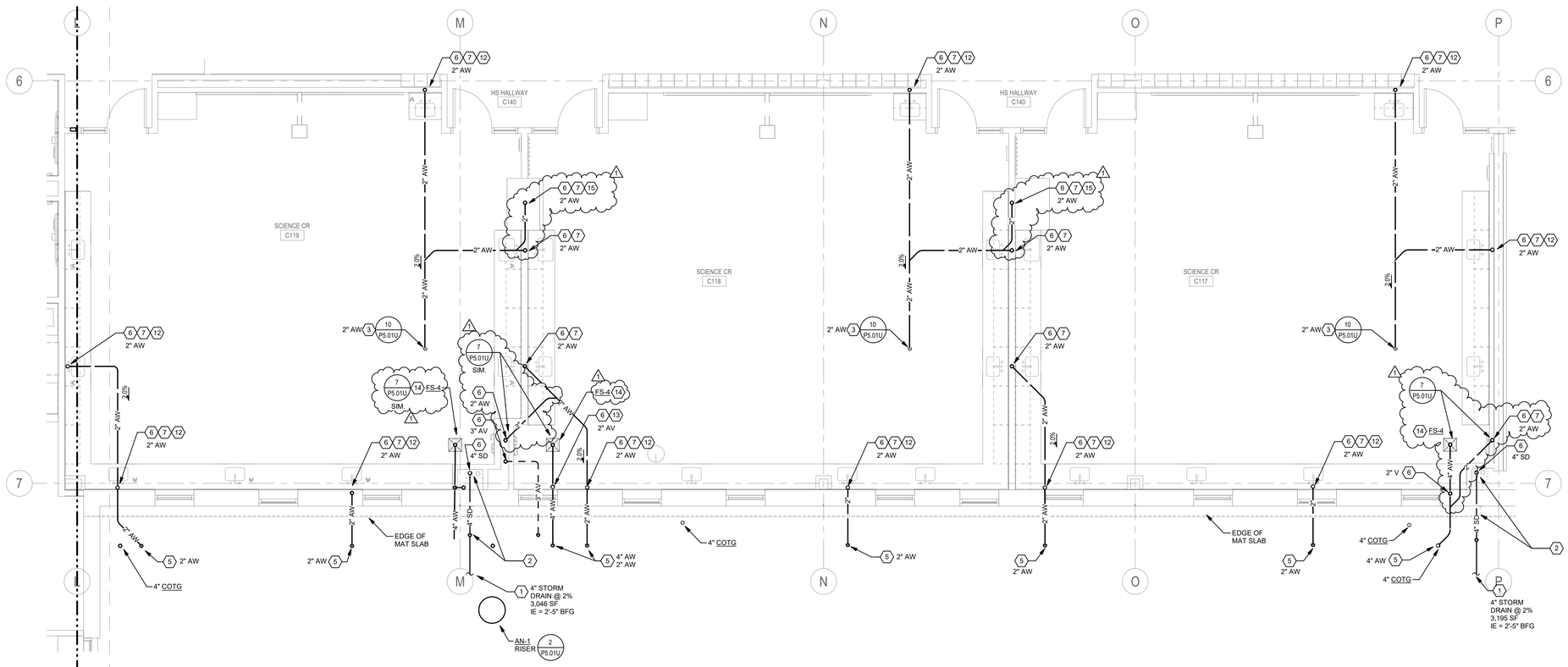

2 ENLARGED FIRST FLOOR SCIENCE LABS - BELOW SLAB - SECTOR C - PLUMBING

1/4" = 1'-0"

SHEET KEYNOTES

1. CONNECT TO SITE UTILITIES. FOR CONTINUATION OF SITE UTILITY REFER TO CIVIL ENGINEER'S SITE UTILITY PLANS.
2. ROUTE STORM DRAIN PIPING OVER TOP OF MAT SLAB THEN OFFSET DOWN AS REQUIRED TO ACHIEVE MINIMUM 2'-0" COVER.
3. EXTEND PIPING DOWN IN PIPE SLEEVE THROUGH MAT SLAB. SEE SHEET P1.03U FOR CONTINUATION.
4. OFFSET PIPING AS SOON AS POSSIBLE DOWNSTREAM OF COMBINATION FLOOR DRAIN/CLEANOUT IN ORDER TO ROUTE PIPING BELOW THE 4" SLAB. ROUTE PIPING AS HIGH AS POSSIBLE AGAINST BOTTOM OF SLAB.
5. SEE SHEET P1.03U FOR CONTINUATION.
6. EXTEND PIPING UP THROUGH TOP SLAB. PROVIDE PIPE STUB ABOVE SLAB FOR FUTURE EXTENSION.
7. WALL CLEANOUT TO BE PROVIDED UPSTREAM OF THIS LOCATION ON ABOVE SLAB WASTE PIPING.
8. SLEEVE DOMESTIC WATER MAIN THROUGH WALL TO BUILDING INTERIOR, PROVIDE WITH SHUT-OFF VALVE AND CAP IN CEILING SPACE FOR FUTURE EXTENSION.
9. PROVIDE SEISMIC JOINT FITTING ON DOMESTIC WATER MAIN AT ENTRANCE TO BUILDING. EBAA IRON INC. 'FLEX-TEND' FLEXIBLE EXPANSION JOINT OR APPROVED EQUAL.
10. SLEEVE PIPING THROUGH WALL TO BUILDING INTERIOR, CAP IN CEILING SPACE FOR FUTURE EXTENSION.
11. SEE SHEET P1.23 FOR CONTINUATION.
12. ABOVE SLAB PIPING SERVING SINKS IS TO BE ROUTED IN PLUMBING CHASE AT THE BACK OF THE SCIENCE AREA CASEWORK. COORDINATE LOCATION OF PIPE STUB WITH LOCATION OF PLUMBING CHASE.
13. COORDINATE LOCATION OF PIPE STUB WITH LOCATION OF PLUMBING CHASE.
14. FIXTURE P-TRAP REQUIRES BLOCK-OUT IN STRUCTURAL SLAB. COORDINATE BLOCK-OUT LOCATION WITH STRUCTURAL ENGINEER.
15. COORDINATE LOCATION WITH POINT OF CONNECTION TO FUME HOOD CUP SINK.

PROJECT 2017-0257
CONTACT Scott Holum

INTERFACE ENGINEERING
100 SW Main St.
Suite 1600
Portland, OR 97204
TEL 503.382.2266
FAX 503.382.2262
www.interfaceengineering.com

BR|IC ARCHITECTURE, INC.
1233 NW NORTHRUP STREET, SUITE 100
PORTLAND, OR 97209 T 503.595.4900

New Middle School / High School
Seaside School District
1801 S. FRANKLIN STREET, SEASIDE, OR 97138
t: 503-738-5591

REGISTERED PROFESSIONAL ENGINEER 17430 OREGON JULY 25, 1994 ANDREW W. FRIGITH
EXPIRES: 12/31/19

key plan

phase	Bid Package 2
date	6/20/2018
revisions	
BP2 - ADD 1	07/03/2018
project #	17007

ENLARGED FLOOR PLANS - BELOW SLAB - SECTOR C - PLUMBING

P4.03U

7/5/2018 7:55:02 AM
C:\Users\StuartG\Documents\SSD MS\HS Central-V17_StuartG@interfaceeng.com.rvt

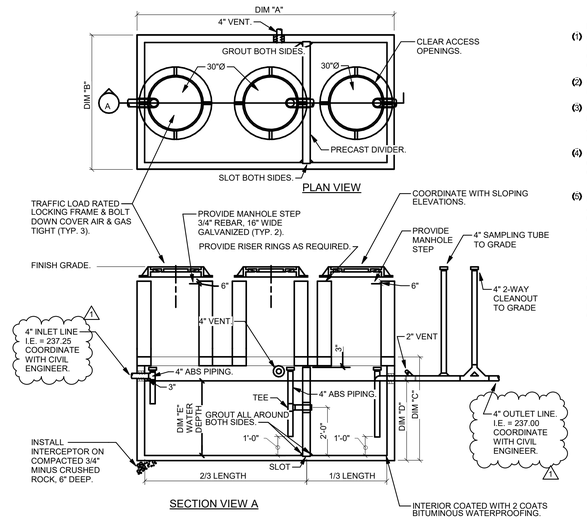

NOTE:

(1) CONTRACTOR TO VERIFY DIMENSIONS FOR INVERTS FROM GRADE TO CENTERLINE. COORDINATE INVERT ELEVATIONS WITH CIVIL ENGINEER.

(2) CONTRACTOR SHALL PROVIDE & INSTALL ALL INTERIOR PIPING IN GREASE INTERCEPTOR.

(3) CONTRACTOR SHALL SUBMIT SHOP DRAWINGS FOR APPROVAL TO LOCAL OFFICIALS HAVING JURISDICTION PRIOR TO PURCHASE AND INSTALLATION.

(4) CONTRACTOR SHALL FILL INTERCEPTOR WITH CLEAN WATER. ALL PIPING CONNECTIONS AND GRADE RISERS SHALL BE GAS AND AIRTIGHT.

(5) MANHOLE STEPS (2 TYP.) SHALL BE INSTALLED AT 30"ø ACCESS MANHOLE RISERS, AS NOTED (2 TYP.). CONTRACTOR SHALL PROVIDE

(1) ONE HOOK LADDER FOR ACCESS TO INTERCEPTOR OF 3/4" DIAMETER RUNGS ON 12" CENTERS. SIDE RAILS SHALL BE 1-1/2"x 3/8" FLAT BAR (2-1/2"x 3/8" WHEN LADDER LENGTH IS OVER 12'-0") SPACING @12", HOT DIPPED GALVANIZED. CONTRACTOR SHALL COORDINATE PURCHASE OF AND LENGTH OF HOOK LADDER WITH INTERCEPTOR MANUFACTURER. PROVIDE LADDER TO OWNERS REPRESENTATIVE.

STRUCTURAL NOTES
1. CONCRETE: 28 DAY STRENGTH f'c = 4500 PSI.
2. REBAR: ASTM A-615 GRADE 60.
3. MESH: ASTM A-185 GRADE 65.
4. DESIGN: ACI-318- 83 BUCKING CODE ASTM C-857 'MIN. STRUCTURAL DESIGN LOADING FOR UNDERGROUND PRECAST CONCRETE UTILITY STRUCTURES'.
5. LOADS: H-20 TRUCK WHEEL W/30% IMPACT.
6. ALL EXTERIOR PIPING SHALL BE CAST IRON.

GALLON CAPACITY		2,000
OLDCASTLE MODEL NO.		612-GA
	DIM "A"	12'-8"
	DIM "B"	6'-8"
	DIM "C"	8'-0"
	DIM "D"	4'-7"
WATER DEPTH	DIM "E"	3'-9 1/2"

SEE CIVIL SITE UTILITY PLANS FOR GREASE INTERCEPTOR LOCATION.

SEASIDE MIDDLE SCHOOL AND HIGH SCHOOL

GREASE INTERCEPTOR SIZING*

TOTAL	FIXTURE/EQUIPMENT		DFU		DFU
	FIRST FLOOR FOOD SERVICE AREAS				
6	FLOOR DRAIN	x	2	=	12
1	3" FLOOR SINK (WALK-IN EVAPORATOR DRAINS)	x	6	=	6
1	3" FLOOR SINK (2 COMPARMENT PREP SINK)	x	6	=	6
1	3" FLOOR SINK (DOUBLE STACKED COMBI OVEN-STEAMER)	x	6	=	6
5	3" FLOOR SINK (1 COMPARMENT SINK)	x	6	=	30
2	4" FLOOR SINK (DISHWASHER) (PEAK DISCHARGE RATE OF 50 GPM, TABLE 702.2(b))	x	8	=	16
3	3" FLOOR TROUGH	x	6	=	18
1	WASTE COLLECTOR	x	3	=	3
5	HAND WASH SINK	x	1	=	5
1	SERVICE SINK	x	3	=	3
1	3 COMPARTMENT SOILED DISHTABLE (POT) SINK	x	9	=	9
	FIRST FLOOR FOOD SERVICE AREAS TOTAL (IN DFU'S)				114
	THIRD FLOOR FOOD SERVICE AREAS				
2	FLOOR DRAIN	x	2	=	4
4	3" FLOOR SINK (DROP-IN HOT/COLD WELLS)	x	6	=	24
2	HAND WASH SINK	x	1	=	2
	THIRD FLOOR FOOD SERVICE AREAS TOTAL (IN DFU'S)				30
	PROJECT FOOD SERVICE AREAS TOTAL (IN DFU'S)				144
MINIMUM REQUIRED INTERCEPTOR VOLUME (30 MINUTE RETENTION): 1500 GALLONS					

* PER SECTION 1014.0 OF THE 2014 OPSC.

1 GREASE INTERCEPTOR

NO SCALE

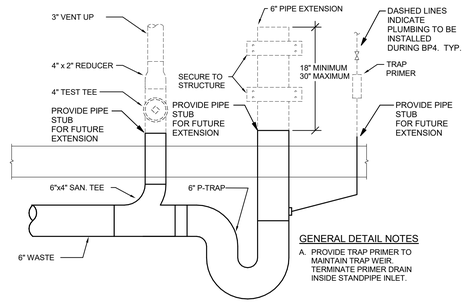

GENERAL DETAIL NOTES

A. PROVIDE TRAP PRIMER TO MAINTAIN TRAP WEIR. TERMINATE PRIMER DRAIN INSIDE STANDPIPE INLET.

3 STANDPIPE

NO SCALE

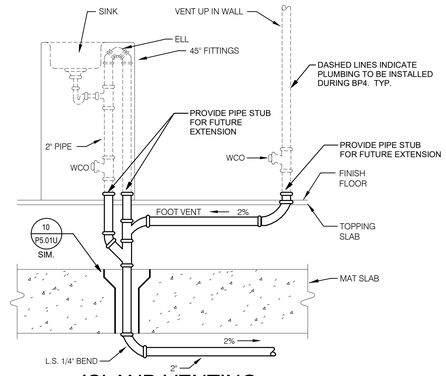

ISLAND VENTING 6 (FIRST FLOOR ONLY)

NO SCALE

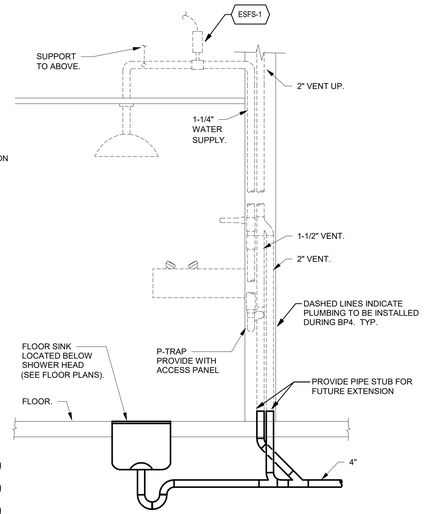

9 EMERGENCY SHOWER DRAIN

NO SCALE

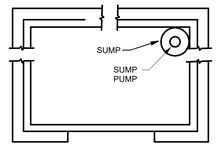

ELEVATOR PIT PLAN VIEW

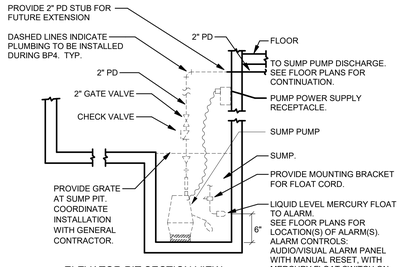

ELEVATOR PIT SECTION VIEW

ALARM CONTROLS: AUDIO/VISUAL ALARM PANEL WITH MANUAL RESET, WITH MERCURY FLOAT SWITCH ON LENGTH OF CORD REQUIRED. CONTRACTOR SHALL PROVIDE ALL POWER WIRING, CONDUITS AND LOW VOLTAGE WIRING. [SJ ELECTRO 202-01 H, 120V] SINGLE PHASE. PROVIDE CONTROL PANEL WITH ONE SET OF AUXILIARY CONTACTS RATED AT 5 AMPS. SEE FLOOR PLANS FOR LOCATION OF ALARM PANEL.

4 ELEVATOR SUMP PUMP

NO SCALE

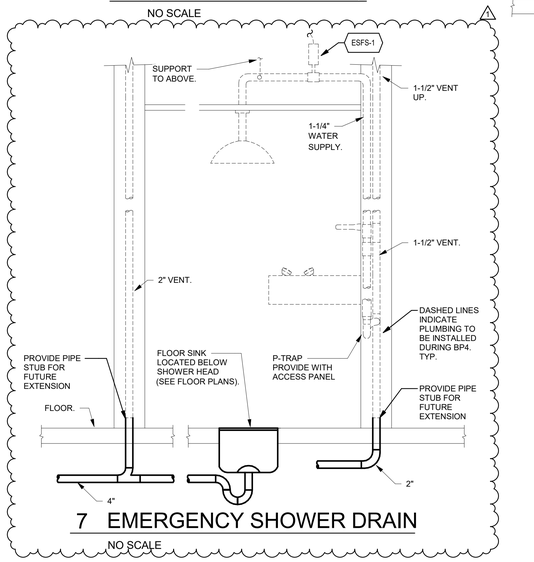

7 EMERGENCY SHOWER DRAIN

NO SCALE

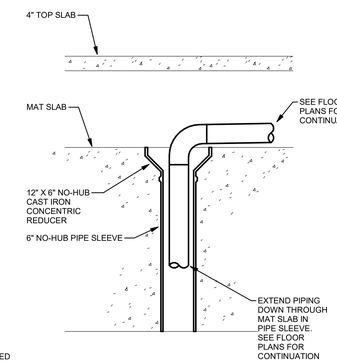

PIPE SLEEVE 10 THROUGH MAT SLAB

NO SCALE

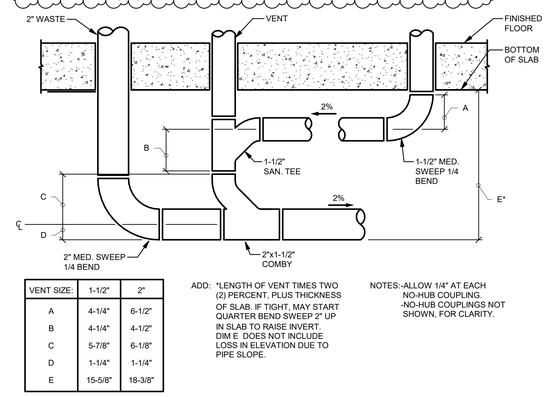

VENT SIZE:	1-1/2"	2"
A	4-1/4"	6-1/2"
B	4-1/4"	4-1/2"
C	5-7/8"	6-1/8"
D	1-1/4"	1-1/4"
E	15-5/8"	18-3/8"

ADD: *LENGTH OF VENT TIMES TWO (2) PERCENT, PLUS THICKNESS OF SLAB. IF TIGHT, MAY START QUARTER BEND SWEEP 2" UP IN SLAB TO RAISE INVERT. DIM E DOES NOT INCLUDE LOSS IN ELEVATION DUE TO PIPE SLOPE.

NOTES:-ALLOW 1/4" AT EACH NO-HUB COUPLING.
-NO-HUB COUPLINGS NOT SHOWN, FOR CLARITY.

8 ISLAND VENTING MINIMUM DIMENSIONS

NO SCALE

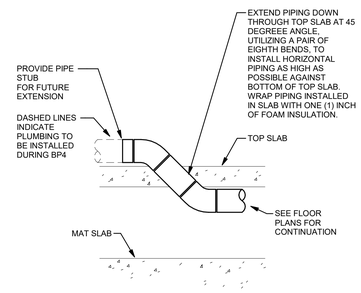

PIPING AND 11 FITTINGS IN TOP SLAB

NO SCALE

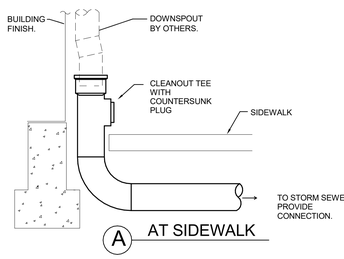

AT SIDEWALK

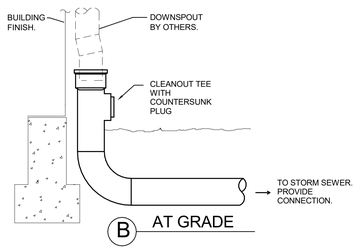

AT GRADE

DOWNSPOUT CONNECTION 5 WITH CLEANOUT TEE

NO SCALE

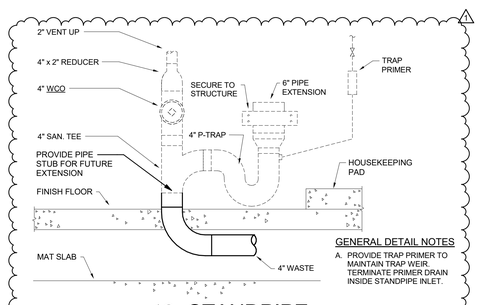

GENERAL DETAIL NOTES

A. PROVIDE TRAP PRIMER TO MAINTAIN TRAP WEIR. TERMINATE PRIMER DRAIN INSIDE STANDPIPE INLET.

12 STANDPIPE

NO SCALE

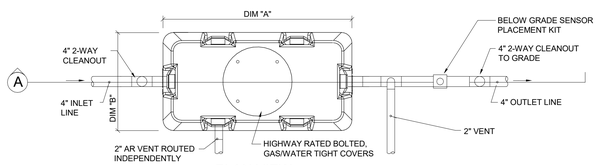

PLAN VIEW

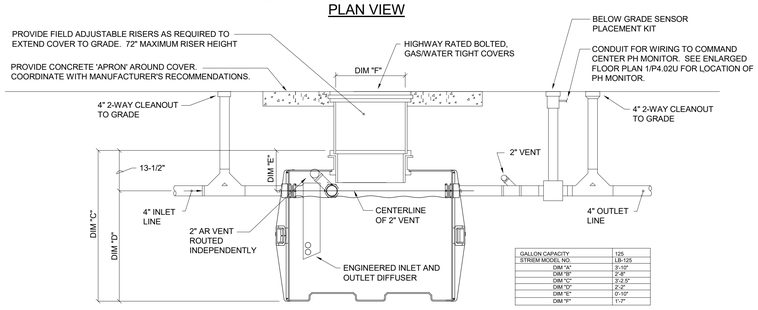

SECTION VIEW

GALLON CAPACITY	125
STREM MODEL NO.	LB-125
DIM "A"	3'-10"
DIM "B"	2'-8"
DIM "C"	3'-2.5"
DIM "D"	2'-2"
DIM "E"	0'-10"
DIM "F"	1'-7"

2 ACID NEUTRALIZATION SYSTEM

NO SCALE

BR|IC ARCHITECTURE, INC.
1233 NW NORTHRUP STREET, SUITE 100
PORTLAND, OR 97209 T 503.595.4900

New Middle School / High School

Seaside School District

1801 S. FRANKLIN STREET, SEASIDE, OR 97138

t: 503-738-5591

REGISTERED PROFESSIONAL ENGINEER 17430 OREGON SEPT. 28, 1982 ANDREW W. FRIEDTL

EXPIRES: 12/31/19

key plan

phase	Bid Package 2
date	6/20/2018
revisions	
BP2 - ADD 1	07/03/2018
project #	17007

DETAILS - PLUMBING

P5.01U

PROJECT 2017-0257
CONTACT Scott Holum
INTERFACE ENGINEERING
100 SW Main St.
Suite 1600
Portland, OR 97204
TEL 503.382.2266
FAX 503.382.2262
www.interfaceengineering.com

7/5/2018 7:55:05 AM
C:\Users\StuartI\Documents\SSD MSHS Central-V17_StuartG@interfaceeng.com.rvt

SHEET KEYNOTES

1. CONNECT TO SITE UTILITIES. FOR CONTINUATION OF SITE UTILITY REFER TO CIVIL ENGINEER'S SITE UTILITY PLANS.
2. CONNECT 4" STORM DRAIN PIPING TO DOWNSPOUT. TRANSITION TO 6" HORIZONTAL PIPING BELOW GRADE.
3. EXTEND PIPING UP THROUGH TOP SLAB. PROVIDE PIPE STUB ABOVE SLAB FOR FUTURE EXTENSION.
4. WALL CLEANOUT TO BE PROVIDED UPSTREAM OF THIS LOCATION ON ABOVE SLAB WASTE PIPING.
5. EXTEND PIPING DOWN IN PIPE SLEEVE THROUGH MAT SLAB, SEE SHEET P1.02U FOR CONTINUATION.

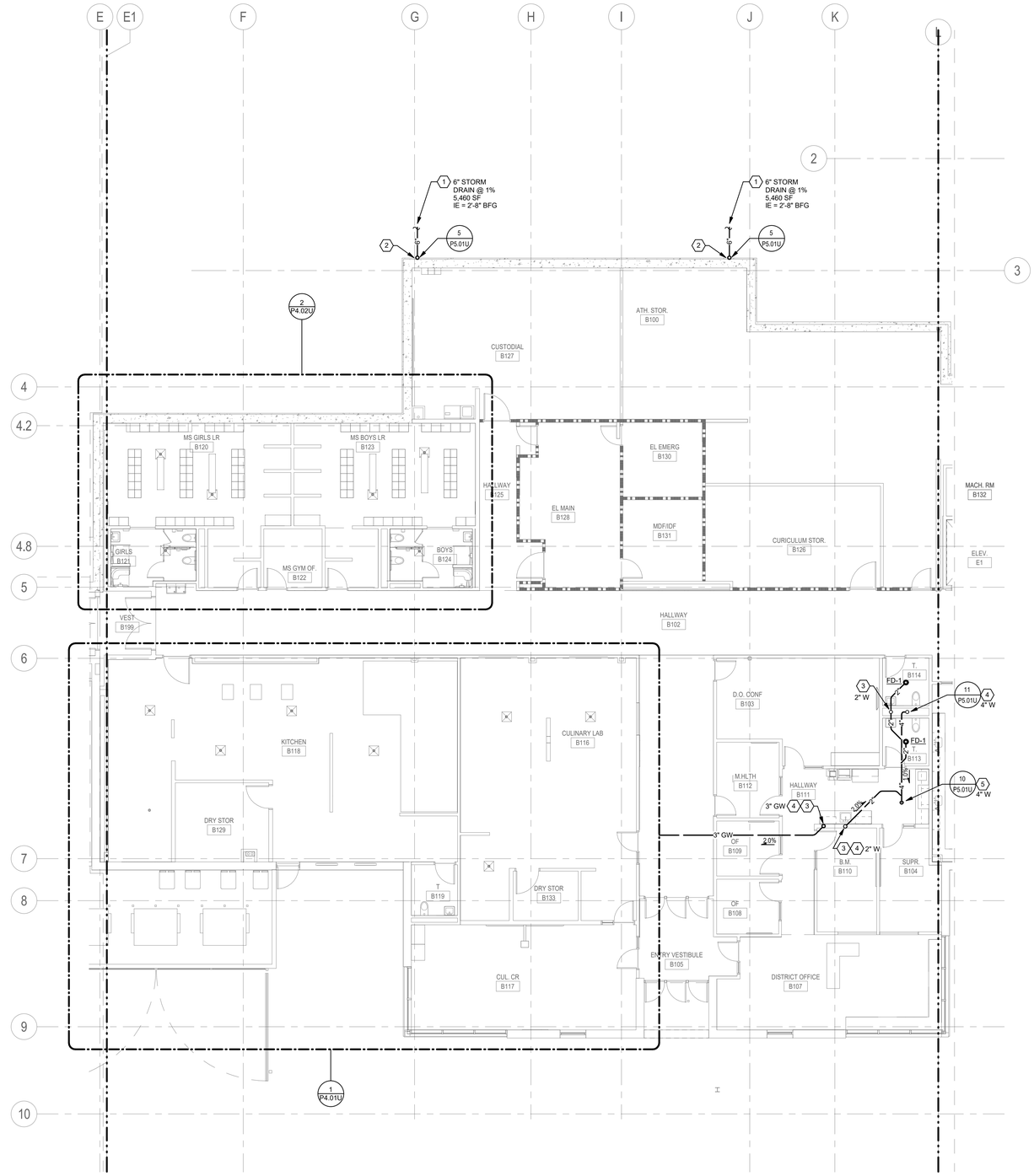

1 FLOOR PLAN LEVEL 1 - BELOW SLAB - SECTOR B - PLUMBING

0' 4' 8' 16'
1/8" = 1'-0"

NORTH

BR|IC ARCHITECTURE, INC.
1233 NW NORTHRUP STREET, SUITE 100
PORTLAND, OR 97209 T 503.595.4900

New Middle School / High School
Seaside School District
1801 S. FRANKLIN STREET, SEASIDE, OR 97138
t: 503-738-5591

REGISTERED PROFESSIONAL ENGINEER 17430 OREGON SEPT. 28, 2012 ANDREW W. FRECHTL
EXPIRES: 12/31/19

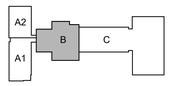

key plan

phase	BP2-PERMIT SET
date	6/15/2018
revisions	
project #	17007

FLOOR PLAN LEVEL 1 - BELOW SLAB - SECTOR B - PLUMBING

P1.02

PROJECT 2017-0257
CONTACT Scott Holum
INTERFACE ENGINEERING
100 SW Main St.
Suite 1600
Portland, OR 97204
TEL 503.382.2266
FAX 503.382.2262
www.interfaceengineering.com

6/13/2018 11:22:33 AM
C:\Users\StuartDocuments\SSD MSHS Central-V17_StuartG@interfaceeng.com.rvt

SHEET KEYNOTES

1. CONNECT TO SITE UTILITIES. FOR CONTINUATION OF UTILITY REFER TO CIVIL ENGINEER'S SITE UTILITY DRAWINGS.
2. SEE SHEET P1.03U FOR CONTINUATION.
3. CONNECT 4" VERTICAL STORM DRAIN PIPING TO DOWNSPOUT. TRANSITION TO 6" HORIZONTAL PIPING BELOW GRADE. ROUTE HORIZONTAL STORM DRAIN PIPING OVER TOP OF MAT SLAB THEN OFFSET DOWN AS REQUIRED TO ACHIEVE MINIMUM 2'-0" COVER.
4. EXTEND PIPING DOWN IN PIPE SLEEVE THROUGH MAT SLAB. SEE SHEET P1.03U FOR CONTINUATION.
5. SLEEVE PIPING THROUGH WALL AND CAP IN LEVEL 1 CEILING SPACE FOR FUTURE EXTENSION.
6. EXTEND PIPING UP THROUGH TOP SLAB, SEE SHEET P1.23 FOR CONTINUATION.
7. EXTEND PIPING UP THROUGH TOP SLAB. PROVIDE PIPE STUB ABOVE SLAB FOR FUTURE EXTENSION.
8. WALL CLEANOUT TO BE PROVIDED UPSTREAM OF THIS LOCATION ON ABOVE SLAB WASTE PIPING.
9. NATURAL GAS SERVICE UP TO NATURAL GAS METER ASSEMBLY. COORDINATE LOCATION AND INSTALLATION WITH SERVING UTILITY.

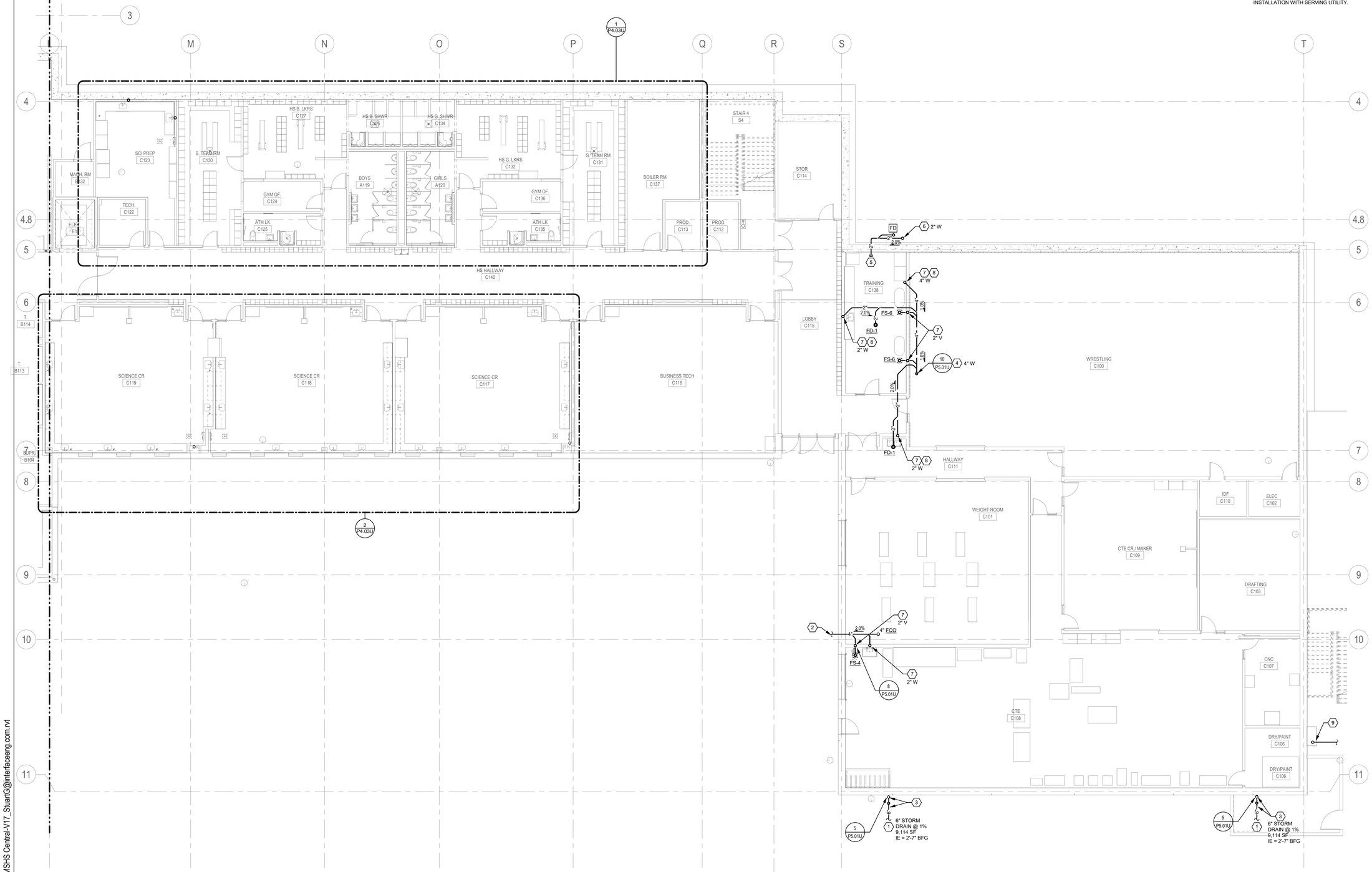

1 FLOOR PLAN LEVEL 1 - BELOW SLAB - SECTOR C - PLUMBING

0' 4' 8' 16'
1/8" = 1'-0"

NORTH

PROJECT 2017-0257
CONTACT Scott Holum

INTERFACE ENGINEERING
100 SW Main St.
Suite 1600
Portland, OR 97204
TEL 503.382.2266
FAX 503.382.2262
www.interfaceengineering.com

BR|IC ARCHITECTURE, INC.
1233 NW NORTHRUP STREET, SUITE 100
PORTLAND, OR 97209 T 503.595.4900

New Middle School / High School
Seaside School District
1801 S. FRANKLIN STREET, SEASIDE, OR 97138
t: 503-738-5591

REGISTERED PROFESSIONAL ENGINEER 17430 OREGON SEPT. 28, 2004 ANDREW W. FRICHTL
EXPIRES: 12/31/19

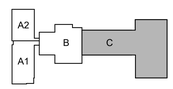

key plan

phase	BP2-PERMIT SET
date	6/15/2018
revisions	
project #	17007

FLOOR PLAN LEVEL 1 - BELOW SLAB - SECTOR C - PLUMBING

P1.03

6/13/2018 11:22:37 AM
C:\Users\StuartG\Documents\SSD MSHS Central-V17_StuartG@interfaceeng.com.rvt

SHEET KEYNOTES

1 EXTEND PIPING UP THROUGH TOP SLAB. PROVIDE PIPE STUB ABOVE SLAB FOR FUTURE EXTENSION.

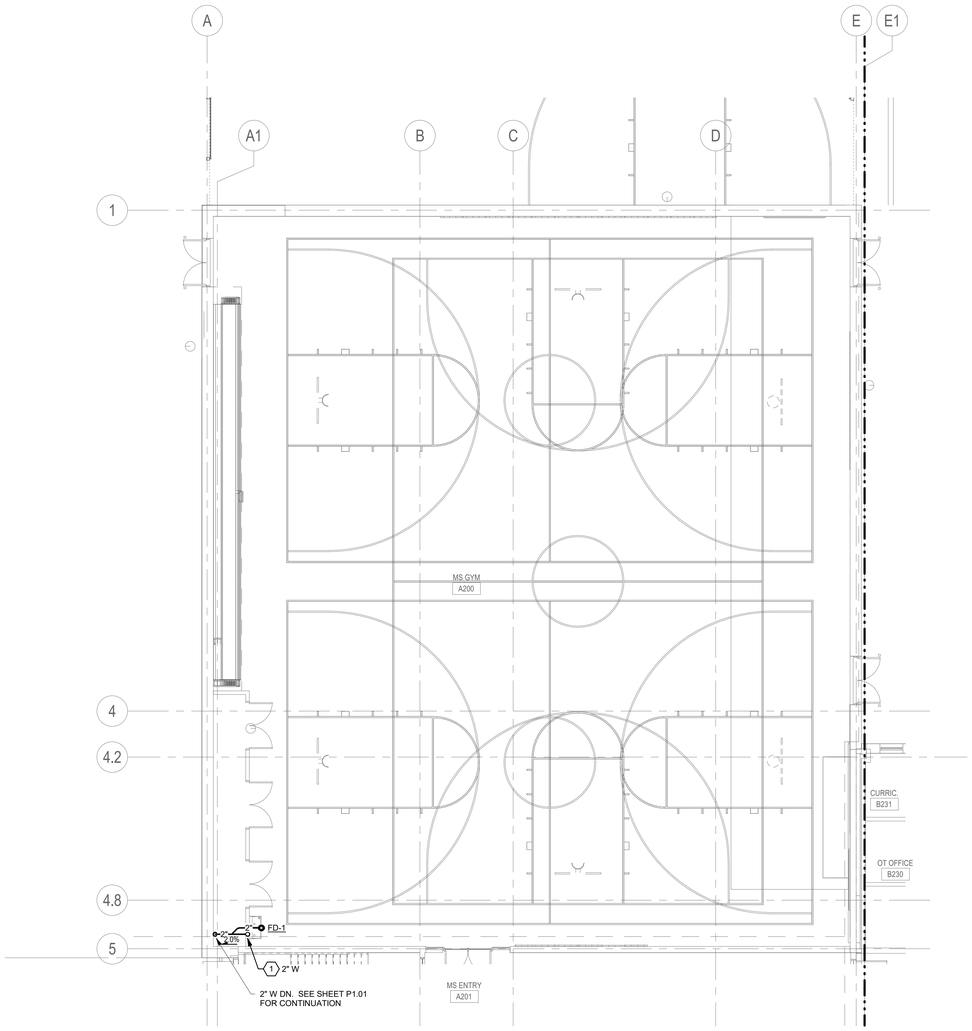

1 SECOND FLOOR PLAN - BELOW SLAB - SECTOR A2 - PLUMBING

0' 4' 8' 16'
1/8" = 1'-0"

NORTH

BR|IC ARCHITECTURE, INC.
1233 NW NORTHRUP STREET, SUITE 100
PORTLAND, OR 97209 T 503.595.4900

New Middle School / High School

Seaside School District

1801 S. FRANKLIN STREET, SEASIDE, OR 97138
t: 503-738-5591

REGISTERED PROFESSIONAL ENGINEER 17430 OREGON SEPT. 28, 1984 ANDREW W. FRICHTL

EXPIRES: 12/31/19

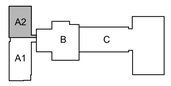

key plan

phase	BP2-PERMIT SET
date	6/15/2018
revisions	
project #	17007

FLOOR PLAN LEVEL 2 - BELOW SLAB - SECTOR A2 - PLUMBING

P1.21

PROJECT 2017-0257
CONTACT Scott Holum
INTERFACE ENGINEERING
100 SW Main St.
Suite 1600
Portland, OR 97204
TEL 503.382.2266
FAX 503.382.2262
www.interfaceengineering.com

8/13/2018 11:22:45 AM
C:\Users\StuartC\Documents\SSD MSHS Central-V17_StuartC@interfaceeng.com.rvt

ELECTRICAL SYMBOL LIST

NOTE: This is a standard symbol list and not all items listed may be used.

Abbreviations

AFC	ABOVE FINISHED CEILING
AFF	ABOVE FINISHED FLOOR
AFG	ABOVE FINISHED GRADE
ARF	ABOVE RAISED FLOOR
ANSI	AMERICAN NATIONAL STANDARDS INSTITUTE
AWG	AMERICAN WIRE GAUGE
A	AMPERES, AMBER
AV	AUDIO VISUAL
AHJ	AUTHORITY HAVING JURISDICTION
AIC	AVAILABLE INTERRUPTING CAPACITY
BAS	BUILDING AUTOMATION SYSTEM
CA	CABLE
CAT	CATEGORY
CLG	CEILING
CB	CIRCUIT BREAKER
C	CONDUIT, CLOSE, CONTROL
CFCI	CONTRACTOR FURNISHED CONTRACTOR INSTALLED
CFOI	CONTRACTOR FURNISHED OWNER INSTALLED
COORD	COORDINATE
CU	COPPER
dB	DECIBEL
(X)	DEMOLISH
DTL	DETAIL
DIA	DIAMETER
DIM	DIMENSION
DIV	DIVISION
DN	DOWN
DWG	DRAWING
EA	EACH
EMT	ELECTRICAL METALLIC TUBING
ENT	ELECTRICAL NON-METALLIC TUBING
ESD	ELECTROSTATIC DISCHARGE
EL	ELEVATION
E	EMERGENCY
EF	EXHAUST FAN
(E)	EXISTING
FMS	FACILITY MANAGEMENT SYSTEMS
FF	FINISH FLOOR
FA	FIRE ALARM
FACP	FIRE ALARM CONTROL PANEL
FMC	FLEXIBLE METAL CONDUIT
FT	FOOT, FEET
FBO	FURNISHED BY OTHERS
G, GND	GROUND
GFCI	GROUND FAULT CIRCUIT INTERRUPTER
GFI	GROUND FAULT INTERRUPTER
GFP	GROUND FAULT PROTECTION
GE	GROUNDING EQUALIZER
HH	HANDHOLE
HT	HEIGHT
HC	HORIZONTAL CROSS CONNECT
ID	IDENTIFICATION
IN	INCH, INCHES
IEEE	INSTITUTE OF ELECTRICAL AND ELECTRONICS ENGINEERS
IG	ISOLATED GROUND
KV	KILOVOLT
KVA	KILOVOLT AMPERES
KW	KILOWATT
LED	LIGHT EMITTING DIODE
LNC	LIQUID TIGHT FLEXIBLE NONMETALLIC CONDUIT
LFMC	LIQUIDTIGHT FLEXIBLE METAL CONDUIT
LV	LOW VOLTAGE
MOCP	MAXIMUM OVERCURRENT PROTECTION
MHz	MEGAHERTZ
MIN	MINIMUM
MCA	MINIMUM CIRCUIT AMPS
MISC	MISCELLANEOUS
M	MOTOR
MCC	MOTOR CONTROL CENTER
MT, MTD	MOUNT, MOUNTED
MDU	MULIT-DWELLING UNIT
NEC	NATIONAL ELECTRIC CODE
NESC	NATIONAL ELECTRIC SAFETY CODE
NEMA	NATIONAL ELECTRICAL MANUFACTURERS ASSOCIATION
N	NEUTRAL
NC	NORMALLY CLOSED
NO	NORMALLY OPEN
N/A	NOT APPLICABLE
N.I.C.	NOT IN CONTRACT
NTS	NOT TO SCALE
OC	ON CENTER
OSP	OUTSIDE PLANT
OFCI	OWNER FURNISHED, CONTRACTOR INSTALLED
OFOI	OWNER FURNISHED, OWNER INSTALLED
PNL	PANEL
PH	PHASE
PVC	POLY-VINYL-CHLORIDE
PWR	POWER
QTY	QUANTITY
(R)	RELOCATE
RFI	REQUEST FOR INFORMATION
REQD	REQUIRED
RMC	RIGID METAL CONDUIT
RM	ROOM
SHT	SHEET
SPKR	SPEAKER
STD	STANDARD
SPD	SURGE PROTECTION DEVICE
SWBD	SWITCHBOARD
TBB	TELECOMMUNICATIONS BONDING BACKBONE
TGB	TELECOMMUNICATIONS GROUNDING BUS BAR
TTB	TELEPHONE TERMINAL BOARD
TBD	TO BE DETERMINED
XFMR	TRANSFORMER
TVSS	TRANSIENT VOLTAGE SURGE SUPPRESSOR
TP	TRANSITION POINT
TYP	TYPICAL
UL	UNDERWRITERS LABORATORIES
UPS	UNINTERRUPTIBLE POWER SUPPLY
UON	UNLESS OTHERWISE NOTED
VRFY	VERIFY
V	VOLTS, VOLTAGE
WP	WEATHERPROOF
W	WIRE, WHITE
W/	WITH
W/O	WITHOUT
WAO	WORK AREA OUTLET

Connections / Equipment

VFD	COMBINATION ADJUSTABLE FREQUENCY DRIVE WITH SAFETY DISCONNECT SWITCH
	COMBINATION MOTOR STARTER/FUSED DISCONNECT SWITCH
C	CONTACTOR COIL
F	HEAVY DUTY FUSED DISCONNECT SWITCH
J OR J	JUNCTION BOX
	MOTOR CONNECTION
	NON-FUSED DISCONNECT SWITCH
R	RELAY
DR	REMOTE DRIVER FOR LED LUMINAIRES
T	TRANSFORMER
FSD	FIRE SMOKE DAMPER
SD	SMOKE DAMPER
	WALL-MOUNTED JUNCTION BOX

General

X / X	DETAIL NUMBER AND SHEET LOCATION
XX-X LOCATION	EQUIPMENT IDENTIFICATION
XX	FOOD SERVICE EQUIPMENT / CALCULATION TAG
1	KEYED NOTE
	POINT OF CONNECTION
X / XXX	SECTION NUMBER AND SHEET LOCATION
	DEMOLISH
	EXISTING WORK
	NEW WORK

Lighting

	AREA LUMINAIRE ARM MOUNTED WITH POLE AND CONCRETE BASE. NUMBER OF HEADS AND CONFIGURATION INDICATED ON PLANS. SHOWN FOR REFERENCE ONLY. REFER TO LANDSCAPE ARCHITECTURAL PLANS FOR EXACT LOCATIONS.

Miscellaneous

#10 B-2,7,29,31.	BRANCH CIRCUIT WIRING. ARROW INDICATES HOME RUN TO PANEL WITH CIRCUITS AS NOTED. WIRE SIZE IS #12 AWG MINIMUM UNLESS NOTED OTHERWISE. SHORT TICK MARKS INDICATE PHASE CONDUCTORS. LONG TICK MARKS INDICATE NEUTRAL CONDUCTORS. A SINGLE CURVED TICK MARK INDICATES INSULATED GREEN GROUND CONDUCTOR. SECOND CURVED TICK MARK INDICATES "ISOLATED GROUND" (GREEN INSULATION WITH YELLOW STRIPE) CONDUCTOR.
CC	VIDEO SURVEILLANCE CAMERA WITH SINGLE GANG BACKBOX AND 1"C TO ACCESSIBLE CEILING SPACE AND (1) CATEGORY 6 CABLES TO THE NEAREST TELECOM ROOM.

Raceways

	EXISTING CONDUIT CONCEALED IN WALL OR CEILING SPACE
	EXISTING CONDUIT ROUTED BELOW FLOOR / GRADE
—OP—	OVERHEAD PRIMARY SERVICE
—OT—	OVERHEAD TELEPHONE SERVICE
—C—	UNDERGROUND CABLE TELEVISION SERVICE
—P—	UNDERGROUND PRIMARY SERVICE
—S—	UNDERGROUND SECONDARY SERVICE
—T—	UNDERGROUND TELEPHONE SERVICE
	CONDUIT CONCEALED IN WALL OR CEILING SPACE
	CONDUIT ROUTED BELOW FLOOR / GRADE
	CONDUIT ELLED DOWN
	CONDUIT ELLED UP
	CONDUIT/WIRING CONTINUATION
	CONDUIT/WIRING STUBBED OUT WITH END CAP OR INSULATED PLASTIC BUSHING
	FLEXIBLE CONDUIT

Incoming Electrical Service Division of Responsibility

	Contractor	Utility
Primary Conduit	X	
Primary Conductors		X
Trenching and Backfill	X	
Transformer		X
Transformer Pad / Vault	X	
Bollards	X	
Transformer Connections		X
Secondary Conduit	X	
Secondary Conductors		X
C/T Enclosure	X	
C/T's		X
Meter Base	X	
Meter		X
Electric Room Door Lock Box (obtain from power company)	X	
Reported Fault Current at Transformer:		N/A

Contacts:

Power Utility:
Marilyn Brockey
Pacific Power
Marilyn.Brockey@pacificorp.com
Clatsop Operations
Phone: (503)861-6005
Fax: ( )

Telephone Utility:
Century Link
Michael Meisner
Email: Michael.Meisner@CenturyLink.com
Email: Jennifer.Bowen@CenturyLink.com

Cable T.V. Utility:
City of Seaside SCADA Fiber Optic
City Engineer: Geoffrey Liljenwall
Email: gliljenwall@cityofseaside.us

Notes:
1. Contact and coordinate all requirements and responsibilities with serving utility companies prior to submitting bid.

2. All service installation work shall be in strict compliance with the requirements of the serving utilities.

Disclaimer: Interface Engineering, Inc. has contacted the utilities but has not received in writing the final requirements from the [power utility] [telephone utility] [CATV utility]. These drawings indicate our best estimation of their requirements. [Prior to bid] [Prior to any construction] contact the utilities and obtain in writing their requirements.

SHEET INDEX

E0.01U	SYMBOLS LISTS AND GENERAL NOTES - ELECTRICAL
E3.11U	UNDERGROUND FLOOR PLAN - SECTOR A1 - POWER
E3.12U	UNDERGROUND FLOOR PLAN - SECTOR B - POWER
E3.13U	UNDERGROUND FLOOR PLAN - SECTOR C - POWER
E3.21U	UNDERGROUND FLOOR PLAN - SECTOR A2 - POWER
E5.01	SINGLE LINE DIAGRAMS - ELECTRICAL
E5.02	SINGLE LINE DIAGRAMS - ELECTRICAL
E5.03	SINGLE LINE DIAGRAMS - ELECTRICAL
E7.01	DETAILS - ELECTRICAL

PROJECT 2017-0257
CONTACT Jeff Harrison

INTERFACE ENGINEERING
100 SW Main St.
Suite 1600
Portland, OR 97204
TEL 503.382.2266
FAX 503.382.2262
www.interfaceengineering.com

BR|IC ARCHITECTURE, INC.
1233 NW NORTHRUP STREET, SUITE 100
PORTLAND, OR 97209 T 503.595.4900

New Middle School / High School

Seaside School District
1801 S. FRANKLIN STREET, SEASIDE, OR 97138
t: 503-738-5591

REGISTERED PROFESSIONAL ENGINEER
52190PE
OREGON
JULY 31, 2018
DAVID NORMAN CASSLEY
EXPIRES: 12/31/19

key plan

phase	BP2-PERMIT SET
date	6/15/2018
revisions	
project #	17007

SYMBOLS LISTS AND GENERAL NOTES - ELECTRICAL

E0.01U

6/13/2018 12:07:47 PM
C:\Users\masonm\Documents\SSD MSHS Central-V17_masonm.rvt

GENERAL SHEET NOTES

A. ALL EQUIPMENT AND DEVICES SHOWN FOR REFERENCE ONLY AND TO BE INSTALLED IN A FUTURE PHASE OF WORK.

B. REFER TO BP1 DRAWINGS FOR SITE ELECTRICAL CONDUIT LAYOUT.

C. MINIMUM CONDUIT SIZE TO BE 1-INCH.

D. REFER TO STRUCTURAL DRAWINGS FOR CONDUIT BLOCK OUT LOCATIONS. STUB CONDUIT TO BOTTOM OF MAT SLAB WITHIN BLOCK OUTS.

E. UNLESS A BLOCK OUT IS PROVIDED, CONDUIT WILL PENETRATE SLAB THROUGH SLEEVE. SPACE CONDUIT (3) DIAMETERS APART WHERE SLEEVES ARE USED.

F. DEPTH OF FOUNDATION LAYERS ARE AS FOLLOWS: 4" SLAB ON GRADE, 10" GRAVEL, 20" MAT SLAB.

SHEET KEYNOTES

1 CONDUIT TO STUB INTO RECESSED BACK OF SPIDER BOX FOR FUTURE 208-VOLT, 50-AMP RECEPTACLE.

2 PROVIDE 575-LA OLDCASTLE PRECAST VAULT.

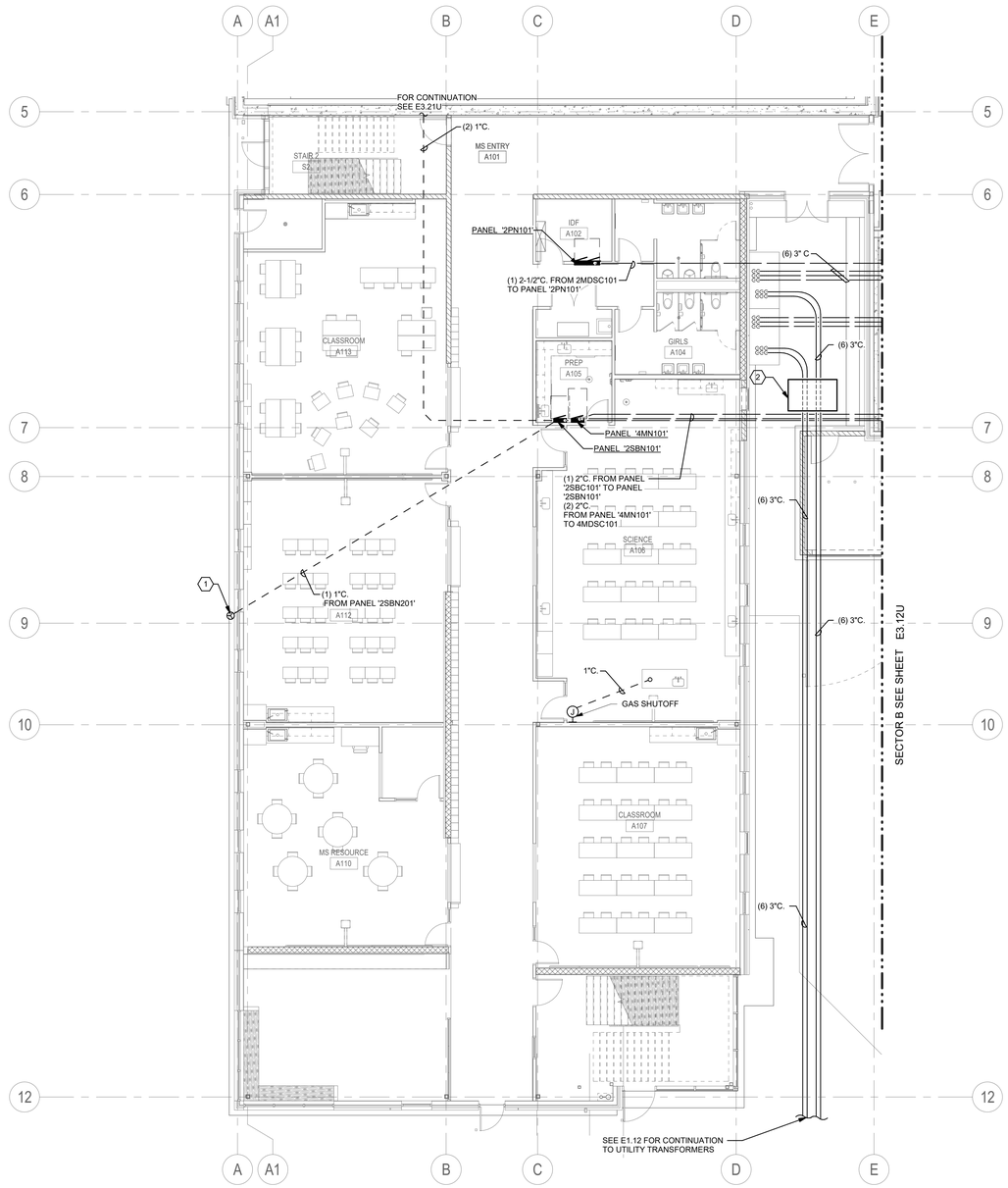

1 UNDERGROUND FLOOR PLAN - SECTOR A1 - POWER

0' 4' 8' 16'
1/8" = 1'-0"

NORTH

BR|IC ARCHITECTURE, INC.
1233 NW NORTHRUP STREET, SUITE 100
PORTLAND, OR 97209 T 503.595.4900

New Middle School / High School

Seaside School District
1801 S. FRANKLIN STREET, SEASIDE, OR 97138
t: 503-738-5591

REGISTERED PROFESSIONAL ENGINEER
82190PE
OREGON
JULY 31, 2018
DAVID NORMAN CARSLEY
EXPIRES: 12/31/19

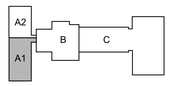

key plan

phase	Bid Package 2
date	6/20/2018
revisions	
BP2 - ADD 1	07/03/2018
project #	17007

UNDERGROUND FLOOR PLAN - SECTOR A1 - POWER

E3.11U

PROJECT 2017-0257
CONTACT Jeff Harrison
INTERFACE ENGINEERING
100 SW Main St.
Suite 1600
Portland, OR 97204
TEL 503.382.2266
FAX 503.382.2262
www.interfaceengineering.com

7/3/2018 2:51:25 PM
C:\Users\masomm\Documents\SSD MSHS Central-V17_jasonmatheis@interfaceeng.com.rvt

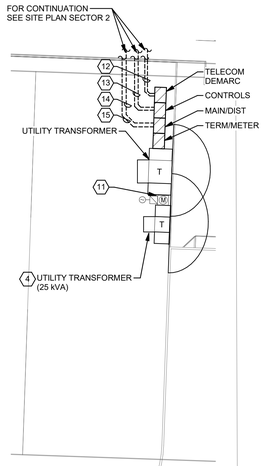

2 ENLARGED UTILITY YARD NEAR FOOTBALL FIELD - POWER

0' 4' 8' 16'
1/16" = 1'-0"

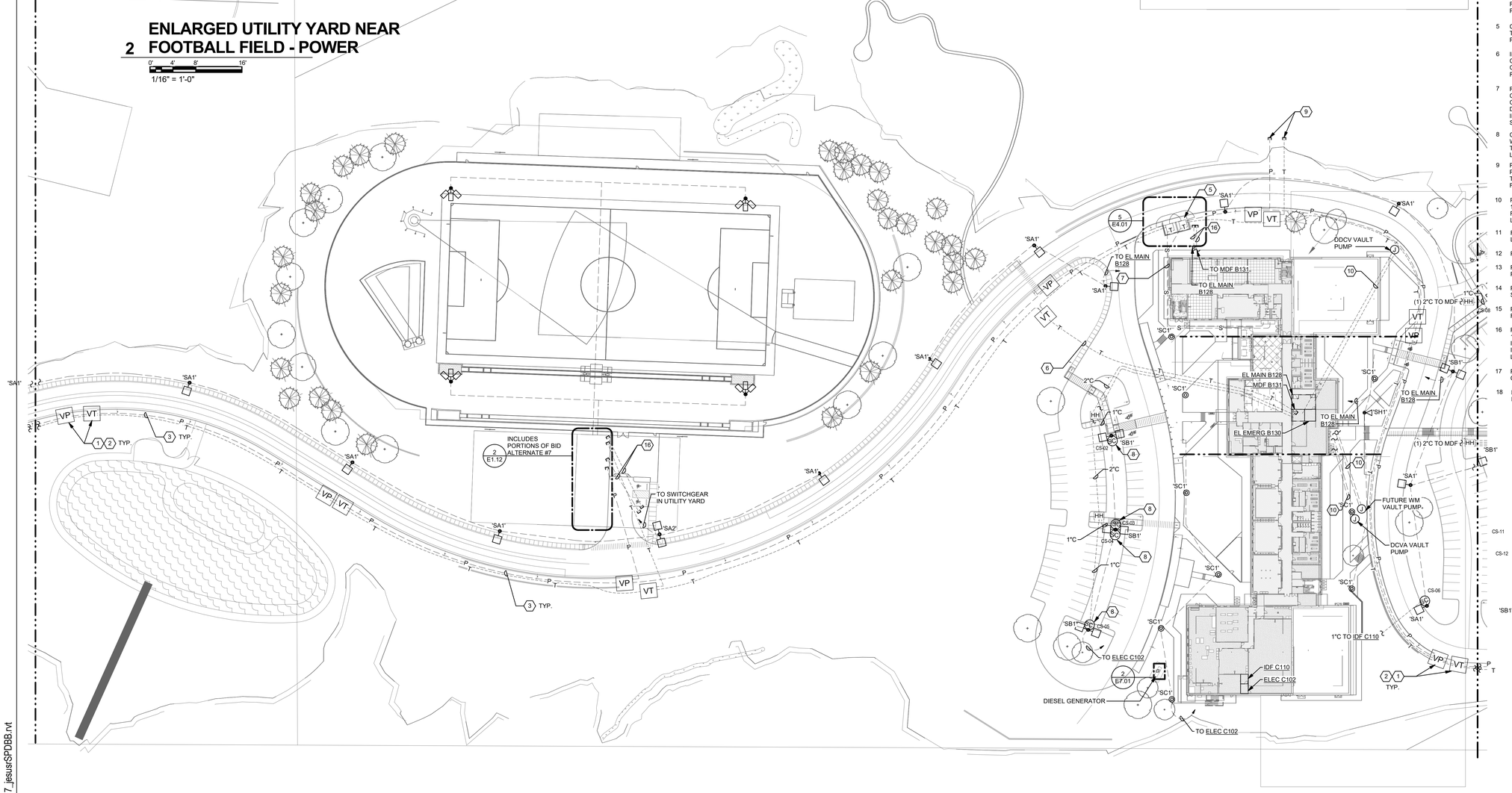

1 SITE PLAN SECTOR 2 - ELECTRICAL

0' 50' 100'
1" = 50'-0"

GENERAL SHEET NOTES

A PROVIDE #8 AWG MINIMUM FOR HOMERUNS AND #10AWG FOR REMAINDER OF CONDUCTORS FOR ALL SITE LIGHTING CONDUCTORS IN THIS SECTOR OF SITE PLAN UNLESS OTHERWISE NOTED.

B REFER TO E5.03 FOR UTILITY YARD SINGLE LINE DIAGRAMS FOR STREET LIGHTING AND BID ALTERNATE #7 SCOPE.

SHEET KEYNOTES

1 PROVIDE UTILITY VAULT 575-PACIFICORP SERIES PULL VAULT FOR PRIMARY POWER.

2 PROVIDE ADJACENT TELECOM VAULTS: UTILITY VAULT 264-TA FOR TELECOM, ONE FOR CENTURYLINK AND ONE FOR CITY OF SEASIDE/FUTURE TELECOM UTILITY.

3 COORDINATE ROUTING OF POWER AND TELECOM CONDUITS, AND PLACEMENT OF VAULTS, ALONG SOUTH SIDE OF NEW ROADWAY, BETWEEN CURB EDGE AND RETAINING WALLS TO THE SOUTH. REFER TO CIVIL PLANS FOR EXACT LOCATIONS. PROVIDE TWO 6-INCH CONDUITS FOR PRIMARY POWER FROM SEASIDE HEIGHT ELEMENTARY TO HIGH SCHOOL AND FUTURE RESERVOIR. PROVIDE TWO 2-INCH CONDUITS FOR TELECOM (CENTURYLINK), ONE 2-INCH CONDUIT FOR SCADA (CITY OF SEASIDE WATER DEPT.) AND ONE 2-INCH CONDUIT FOR FUTURE TELECOM.

4 PROVIDE CONCRETE PAD FOR 25KVA UTILITY TRANSFORMER, 200-AMP, 240/120-VOLT METER PEDESTAL WITH (6) 20A/1P OUTPUT CIRCUIT BREAKERS AND ADJACENT 4-RELAY LIGHTING RELAY PANEL WITH PHOTOCELL FOR CONTROL OF ROADSIDE LIGHTING FROM SEASIDE HEIGHTS ELEMENTARY TO WEST EDGE OF WEST PARKING BY HIGH SCHOOL. ROUTE (1) 2-INCH CONDUIT FOR FUTURE TELECOM AND STUB BY METER PEDESTAL.

5 COORDINATE PLACEMENT OF UTILITY TRANSFORMERS WITH LANDSCAPE PLANS, AND PACIFICORP, PRIOR TO ROUGH-IN.

6 IN SHARED TRENCH, PROVIDE TWO 2-INCH CONDUITS FOR TELECOM (CENTURYLINK) AND ONE 2-INCH CONDUIT FOR FUTURE TELECOM, ROUTED TO MAIN TELECOM ROOM (MDF).

7 ROUTE (6) 6-INCH CONDUITS FOR SECONDARY CONDUITS FROM EACH TRANSFORMER TO EACH OF TWO UTILITY METER ENCLOSURES (SEE DETAIL 6/E4.01). PROVIDE 2-INCH RED-DYE INJECTED CONCRETE ENCASEMENT FOR SECONDARY CONDUITS.

8 CONDUIT TO TERMINATE IN CURVED LID JBOX WITHIN THE LIGHTPOLE BASE. INSTALL LIQUID TIGHT FLEX FROM THE JBOX TO THE CAMERA LOCATION.

9 PROVIDE (2) 4-INCH CONDUIT STUBS, ONE FOR POWER AND ONE FOR TELECOM, FROM UTILITY TRANSORMER TO ACROSS THE STREET FOR FUTURE USE.

10 PROVIDE (1) 1-INCH CONDUIT FOR POWER AND (1) 1-INCH CONDUIT FOR SIGNAL TO CIVIL PUMP. REFER TO CIVIL DRAWINGS FOR EXACT PUMP LOCATION.

11 FUTURE METER PEDESTAL FOR ROADWAY LIGHTING, INCLUDING PHOTOSENSOR.

12 PROVIDE (2) 2-INCH CONDUIT FOR TELECOM.

13 PROVIDE (2) 2-INCH CONDUIT FOR CONTROLLED POWER TO FIELD LIGHTING.

14 PROVIDE (1) 2-INCH CONDUIT FOR POWER TO SOUTH FIELD.

15 PROVIDE (4) 3-INCH CONDUIT FOR POWER TO FUTURE STADIUM.

16 PROVIDE (1) 1-INCH CONDUIT FOR POWER AND (1) 1-INCH CONDUIT FOR SIGNAL TO FUTURE IRRIGATION CONTROLLER. REFER TO BP#4 IRRIGATION PLANS FOR EXACT CONTROLLER LOCATION.

17 PROVIDE (1) 2-1/2-INCH CONDUIT AND (2) 2-INCH CONDUITS TO FUTURE DIESEL GENERATOR.

18 REFER TO SPORT FIELD LIGHTING SPECIFICATION FOR MORE INFORMATION.

BRIC ARCHITECTURE, INC.
1233 NW NORTHRUP STREET, SUITE 100
PORTLAND, OR 97209 T 503.595.4900

New Middle School / High School

Seaside School District
1801 S. FRANKLIN STREET, SEASIDE, OR 97138
t: 503-738-5591

REGISTERED PROFESSIONAL ENGINEER
OREGON
NORMAN CHESLEY
PRELIMINARY
EXPIRES: 12/31/19

key plan

phase	Bid Package 2
date	6/20/2018
revisions	
project #	17007

SITE PLAN SECTOR 2 - ELECTRICAL

E1.12

PROJECT 2017-0257
CONTACT Jeff Harrison
INTERFACE ENGINEERING
100 SW Main St.
Suite 1600
Portland, OR 97204
TEL 503.382.2266
FAX 503.382.2262
www.interfaceengineering.com

7/9/2018 11:46:42 AM
C:\Users\jesusr\Documents\SSD MSHS Central-V17_jesusrSPDBB.rvt

GENERAL SHEET NOTES

A. ALL EQUIPMENT AND DEVICES SHOWN FOR REFERENCE ONLY AND TO BE INSTALLED IN A FUTURE PHASE OF WORK.

B. REFER TO BP1 DRAWINGS FOR SITE ELECTRICAL CONDUIT LAYOUT.

C. MINIMUM CONDUIT SIZE TO BE 1-INCH.

D. REFER TO STRUCTURAL DRAWINGS FOR CONDUIT BLOCK OUT LOCATIONS. STUB CONDUIT TO BOTTOM OF MAT SLAB WITHIN BLOCK OUTS.

E. UNLESS A BLOCK OUT IS PROVIDED, CONDUIT WILL PENETRATE SLAB THROUGH SLEEVE. SPACE CONDUIT (3) DIAMETERS APART WHERE SLEEVES ARE USED.

F. DEPTH OF FOUNDATION LAYERS ARE AS FOLLOWS: 4" SLAB ON GRADE, 10" GRAVEL, 20" MAT SLAB.

SHEET KEYNOTES

1 ALL CONDUIT THROUGH INDICATED AREA TO BE ENCASED IN #4 REBAR REINFORCED CONCRETE AND RECOMMENDED TO BE LOCATED AT AN ELEVATION OF 204'-10" MEASURED FROM SEA LEVEL TO TOP OF CONCRETE ENCASEMENT.

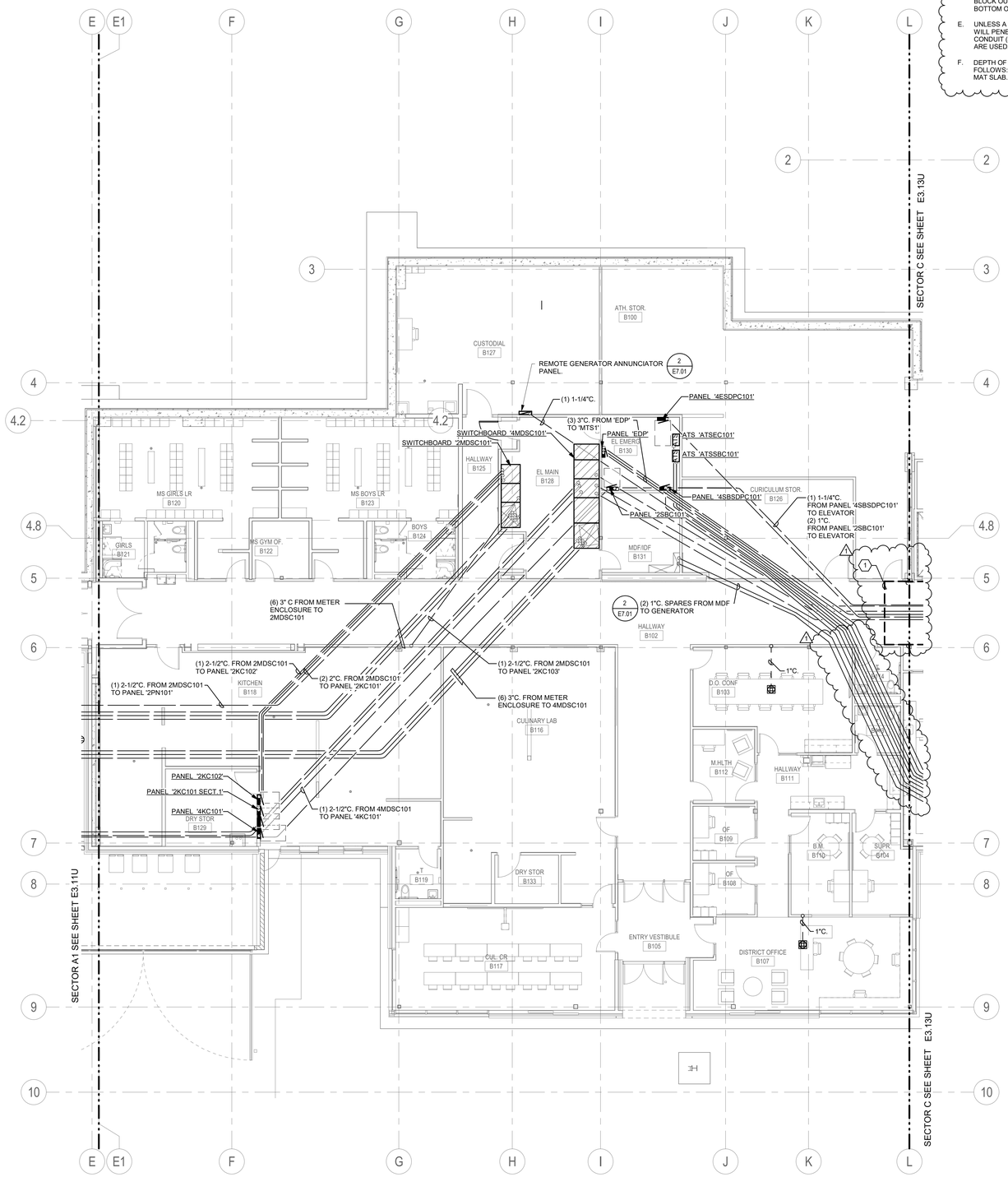

1 UNDERGROUND FLOOR PLAN - SECTOR B - POWER

0' 4' 8' 16'
1/8" = 1'-0"

NORTH

BR|IC ARCHITECTURE, INC.
1233 NW NORTHRUP STREET, SUITE 100
PORTLAND, OR 97209 T 503 595 4900

New Middle School / High School

Seaside School District
1801 S. FRANKLIN STREET, SEASIDE, OR 97138
t: 503-738-5591

REGISTERED PROFESSIONAL ENGINEER
82190PE
OREGON
JULY 14, 2008
DAVID NORMAN CHESLEY
EXPIRES: 12/31/19

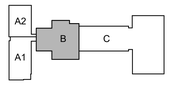

key plan

phase	Bid Package 2
date	6/20/2018
revisions	
BP2 - ADD 1	07/03/2018
project #	17007

UNDERGROUND FLOOR PLAN - SECTOR B - POWER

E3.12U

PROJECT 2017-0257
CONTACT Jeff Harrison
INTERFACE ENGINEERING
100 SW Main St.
Suite 1600
Portland, OR 97204
TEL 503.382.2266
FAX 503.382.2262
www.interfaceengineering.com

7/3/2018 2:51:25 PM
C:\Users\masonm\Documents\SSD MSHS Central-V17_jasonmatheis@interfaceeng.com.rvt

GENERAL SHEET NOTES

A. ALL EQUIPMENT AND DEVICES SHOWN FOR REFERENCE ONLY AND TO BE INSTALLED IN A FUTURE PHASE OF WORK.

B. REFER TO BP1 DRAWINGS FOR SITE ELECTRICAL CONDUIT LAYOUT.

C. MINIMUM CONDUIT SIZE TO BE 1-INCH.

D. REFER TO STRUCTURAL DRAWINGS FOR CONDUIT BLOCK OUT LOCATIONS. STUB CONDUIT TO BOTTOM OF MAT SLAB WITHIN BLOCK OUTS.

E. UNLESS A BLOCK OUT IS PROVIDED, CONDUIT WILL PENETRATE SLAB THROUGH SLEEVE. SPACE CONDUIT (3) DIAMETERS APART WHERE SLEEVES ARE USED.

F. DEPTH OF FOUNDATION LAYERS ARE AS FOLLOWS: 4" SLAB ON GRADE, 10" GRAVEL, 20" MAT SLAB.

SHEET KEYNOTES

1 ALL CONDUIT THROUGH INDICATED AREA TO BE ENCASED IN #4 REBAR REINFORCED CONCRETE AND RECOMMENDED TO BE LOCATED AT AN__ ELEVATION OF 204'-10" MEASURED FROM SEA LEVEL TO TOP OF CONCRETE ENCASEMENT.

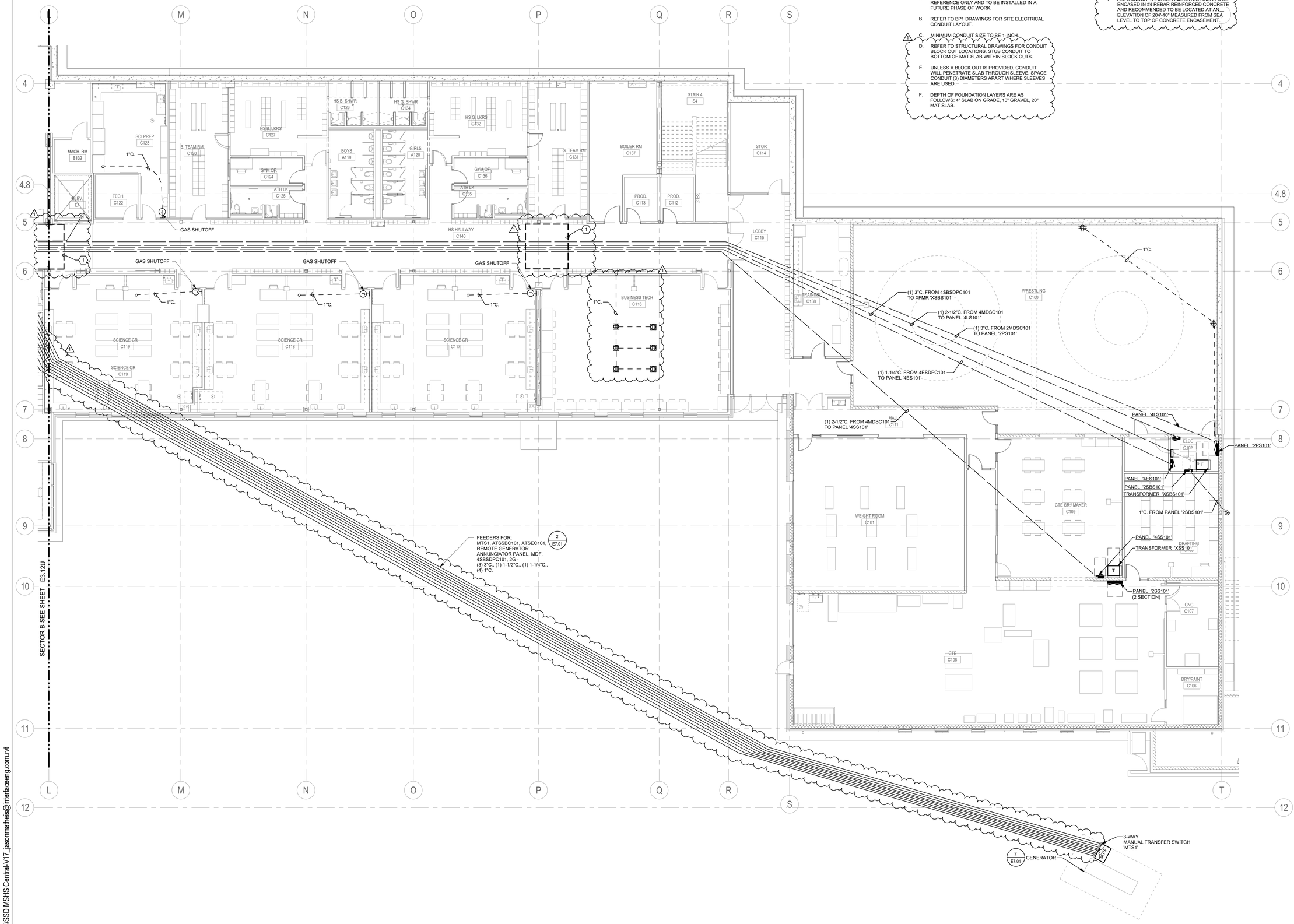

1 OVERALL FLOOR PLAN LEVEL 1 - POWER

1/8" = 1'-0"

NORTH

PROJECT 2017-0257
CONTACT Jeff Harrison
INTERFACE ENGINEERING
100 SW Main St.
Suite 1600
Portland, OR 97204
TEL 503.382.2266
FAX 503.382.2262
www.interfaceengineering.com

BR|IC ARCHITECTURE, INC.
1233 NW NORTHRUP STREET, SUITE 100
PORTLAND, OR 97209 T 503 595 4900

New Middle School / High School

Seaside School District

1801 S. FRANKLIN STREET, SEASIDE, OR 97138
t: 503-738-5591

REGISTERED PROFESSIONAL ENGINEER 82190PE OREGON JULY 14, 2008 DAVID NORMAN CHESLEY
EXPIRES: 12/31/19

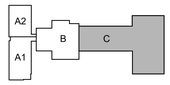

key plan

phase	Bid Package 2
date	6/20/2018
revisions	
BP2 - ADD 1	07/03/2018
project #	17007

UNDERGROUND FLOOR PLAN - SECTOR C - POWER

E3.13U

7/3/2018 2:51:26 PM
C:\Users\masonm\Documents\SSD MSHS Central-V17_jasonmatheis@interfaceeng.com.rvt

SHEET KEYNOTES

1 CONDUIT TO STUB INTO RECESSED BACK OF SPIDER BOX FOR FUTURE 208-VOLT, 50-AMP RECEPTACLE.

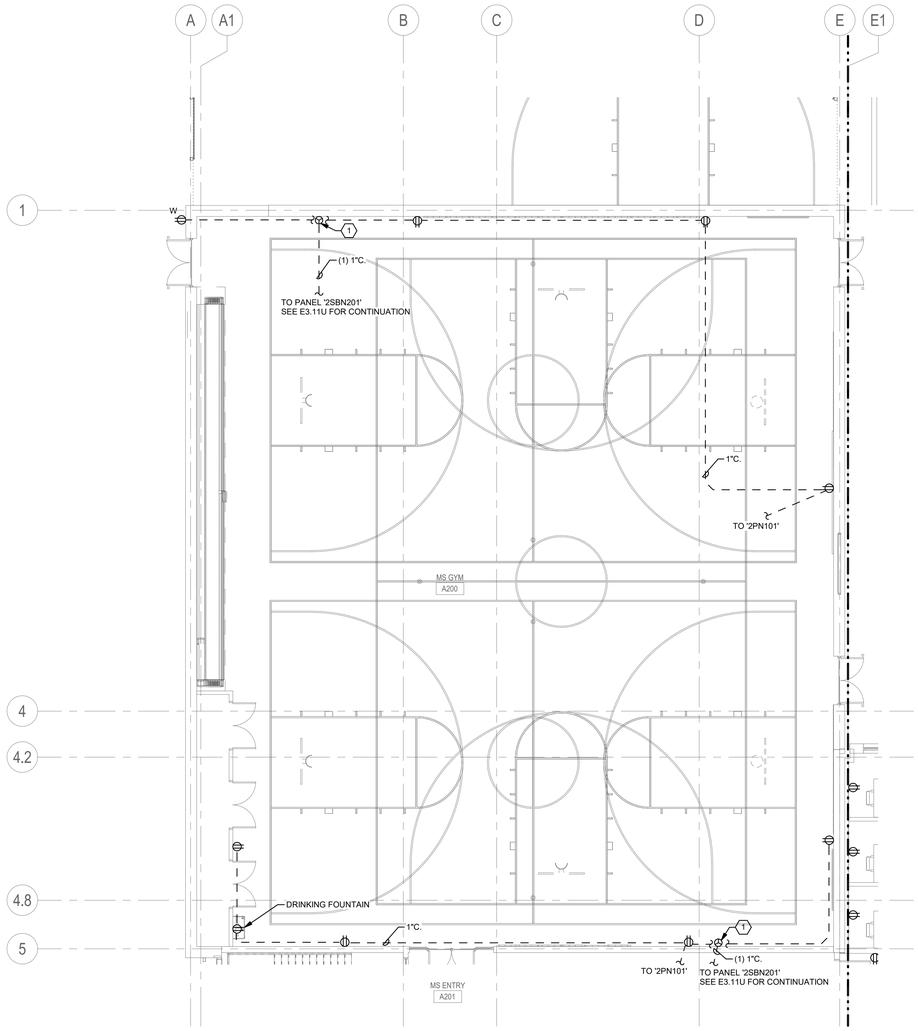

1 UNDERGROUND FLOOR PLAN- SECTOR A2 - POWER

0' 4' 8' 16'
1/8" = 1'-0"

PROJECT 2017-0257
CONTACT Jeff Harrison
INTERFACE ENGINEERING
100 SW Main St.
Suite 1600
Portland, OR 97204
TEL 503.382.2266
FAX 503.382.2262
www.interfaceengineering.com

BR|IC ARCHITECTURE, INC.
1233 NW NORTHRUP STREET, SUITE 100
PORTLAND, OR 97209 T 503.595.4900

New Middle School / High School

Seaside School District
1801 S. FRANKLIN STREET, SEASIDE, OR 97138
t: 503-738-5591

REGISTERED PROFESSIONAL ENGINEER
52190PE
OREGON
JULY 14, 1978
DAVID NORMAN CHESLEY
EXPIRES: 12/31/19

k e y p l a n

phase	BP2-PERMIT SET
date	6/15/2018
revisions	
project #	17007

UNDERGROUND FLOOR PLAN - SECTOR A2 - POWER

E3.21U

6/13/2018 12:07:49 PM
C:\Users\masonm\Documents\SSD MSHS Central-V17_masonm.rvt

FEEDER SCHEDULE

Key

A, C, S, X	A = Aluminum C = Conduit only S = Service secondary X = Separately derived system
304	4 #10 CU, 1 #10 CU GND., IN 3/4" C.
504	4 #6 CU, 1 #10 CU GND., IN 1" C.
804	4 #2 CU, 1 #8 CU GND., IN 1-1/4" C.
1003	3 #2 CU, 1 #8 CU GND., IN 1-1/4" C.
1254	4 #1 CU, 1 #6 CU GND., IN 1-1/2" C.
2254	4 #4/0 CU, 1 #4 CU GND., IN 2-1/2" C.
2254X	4 #4/0 CU, 1 #2 CU GND., IN 2-1/2" C.
4004	2 SETS OF (4 #3/0 CU, 1 #2 CU GND., IN 2" C.)
8004	3 SETS OF (4 - 300 kcmil CU, 1 #1/0 CU GND., IN 3" C.)
2000C	SIX 3" DIAMETER EMPTY CONDUIT WITH PULL CORD
2000S	6 SETS OF (4 - 400 kcmil CU IN 3" C.)

GENERAL SHEET NOTES

A. PROVIDE A SELECTIVELY COORDINATED EMERGENCY AND STANDBY SYSTEMS TO 0.1 SECONDS.

B. CIRCUITS: UNLESS OTHERWISE NOTED, SUPPLY 42-CIRCUITS PANELS FOR EMERGENCY, MECHANICAL AND LIGHTING. SUPPLY 54-CIRCUIT PANELS FOR 208/120-VOLT AND STANDBY POWER. MINIMUM 225-AMP BUS. MINIMUM AIC RATING OF PANELS: IN BOTH MAIN ELECTRICAL AND MAIN EMERGENCY ELECTRICAL ROOMS, USE SAME AMPS INTERRUPTING CAPACITY (AIC) RATING AS SWITCHBOARDS; OUTSIDE MAIN ELECTRICAL ROOM, ASSUME 22KAIC FOR 480/277-VOLT PANELS AND 208/120-VOLT PANELS.

C. LIGHTING CONTROL PANELS: PROVIDE MINIMUM 32-RELAY PANELS FOR PURPOSES OF CONTROLLING EXTERIOR LIGHTING CIRCUITS AND INTERIOR COMMONS AREA AND EGRESS PATH (CORRIDORS AND STAIRWELL) LIGHTING CIRCUITS. WHERE OCCUPANCY SENSORS ARE SHOWN IN EGRESS PATH AREAS, THOSE SENSORS CONNECT BACK TO LIGHTING CONTROL PANELS AS CONTROL INPUT. PROVIDE HIGH VOLTAGE BARRIER SECTION IN EACH PANEL FOR SEPARATION BETWEEN NORMAL /STANDBY AND EMERGENCY LIGHTING CIRCUITS.

SHEET KEYNOTES

1. PROVIDE SOLID-STATE BREAKER WITH LSIG-TRIP SETTINGS.
2. PROVIDE 3-1/2 INCH HIGH CONCRETE HOUSEKEEPING PAD UNDER TRANSFORMER/SWITCHBOARD.
3. PULL SECTION AND CURRENT TRANSFORMER/TERMINAL CABINET PER POWER COMPANY REQUIREMENTS.
4. PROVIDE ARC FLASH ENERGY REDUCTION FUNCTION INTEGRAL INTEGRAL TO BREAKER WITH REMOTE MANUAL CONTROL AT ENTRY TO ROOM CONTAINING SWITCHBOARD.
5. COORDINATE WITH UTILITY FOR NET METERING FOR GRID-INTERACTIVE PV SYSTEM.
6. PROVIDE VOLTAGE BARRIER TO SEPARATE EMERGENCY FROM NORMAL CIRCUITS. ROUTE LIGHTING BRANCH CIRCUITS THROUGH REMOTE LIGHTING RELAY PANELS AS DIRECTED IN LIGHTING CONTROL MATRIX ON SHEET E0.03.
7. PROVIDE SHUNT TRIP CIRCUIT BREAKER, WIRING AND CONTROLS. PROVIDE ONE REMOTE SHUNT TRIP DISCONNECT SWITCH AND CONTROLS IN MAIN ELECTRICAL ROOM 367, IDF ROOM 310 AND ELECTRICAL ROOM 461. ACTIVATION OF EITHER SWITCH IS TO TURN ALL PV SYSTEMS AT BUILDING OFF. PROVIDE ENGRAVED LABEL AT REMOTE DISCONNECT: "BUILDING PHOTOVOLTAIC SYSTEMS EMERGENCY DISCONNECT." LOCATE CIRCUIT BREAKER AT OPPOSITE END OF THE BUSBAR FROM THE UTILITY SOURCE. NEC 705.12(D)(2)(3)(b) IS MET. PROVIDE WARNING LABEL: "WARNING: INVERTER OUTPUT CONNECTION. DO NOT RELOCATE THIS OVERCURRENT DEVICE".
8. INSTALL FEEDER FROM TRANSFORMER SECONDARY TO MAIN BREAKER IN SWITCHBOARD / PANEL/DISCONNECT, NOT TO EXCEED 25 FEET PER NEC 240.21(C)(6).
9. GROUNDING ELECTRODE SYSTEM SHOWN. PROVIDE BONDING PER NEC / SPECIFICATION REQUIREMENTS.
10. PROVIDE CIRCUIT BREAKER RATED FOR REVERSE POWER FLOW TO ALLOW PV SYSTEM TO DELIVER POWER TO UTILITY.
11. PROVIDE GROUNDING TEST WELL WITH COVER AT EACH GROUND ROD LOCATION. INSTALL TEST WELL COVER FLUSH WITH FINISHED GRADE.
12. CONTROLS CONNECTION BETWEEN PERMANENT GENERATOR AND LOAD BANK. PROVIDE SOLID STATE TRIP BREAKERS WITH LSI TRIP SETTINGS AND KIRK-KEY INTERLOCK SO THAT PERMANENT GENERATOR AND PORTABLE GENERATOR CANNOT BE PARALLELED TOGETHER.
13. PROVIDE POWER/ENERGY SUB-METER TIED TO BUILDING AUTOMATION SYSTEM (BAS) FOR MONITORING: (A) MAIN BREAKER, (B) PV SYSTEM, (C) EMERGENCY AND STANDBY LOADS.

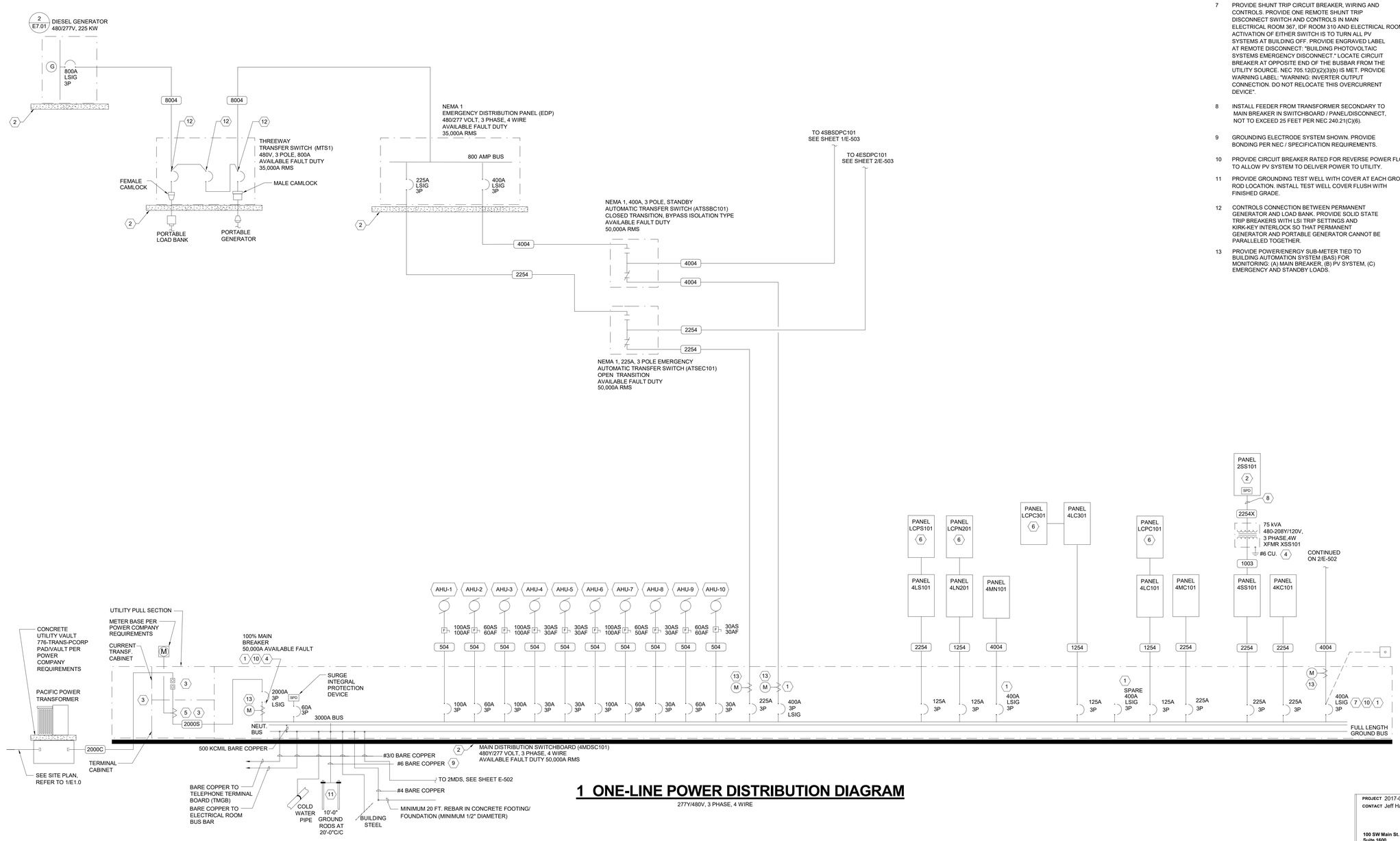

1 ONE-LINE POWER DISTRIBUTION DIAGRAM

277Y/480V, 3 PHASE, 4 WIRE

BR|IC ARCHITECTURE, INC.
1233 NW NORTHRUP STREET, SUITE 100
PORTLAND, OR 97209 T 503.595.4900

New Middle School / High School

Seaside School District
1801 S. FRANKLIN STREET, SEASIDE, OR 97138
t: 503-738-5591

REGISTERED PROFESSIONAL ENGINEER
OREGON
NORMAN CHESSET
EXPIRES: 12/31/19

PRELIMINARY

FOR REFERENCE ONLY

k e y p l a n

phase	BP2-PERMIT SET
date	6/15/2018
revisions	
project #	17007

SINGLE LINE DIAGRAMS - ELECTRICAL

E5.01

PROJECT 2017-0257
CONTACT Jeff Harrison
INTERFACE ENGINEERING
100 SW Main St.
Suite 1600
Portland, OR 97204
TEL 503.382.2266
FAX 503.382.2262
www.interfaceengineering.com

6/13/2018 12:07:50 PM
C:\Users\masonm\Documents\SSD MSHS Central-V17_masonm.rvt

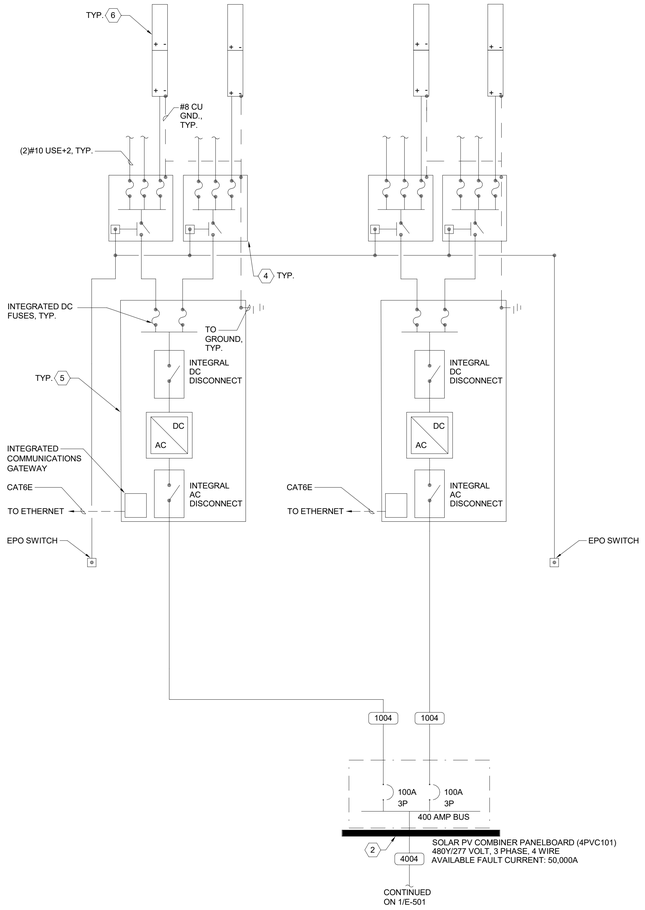

2 PV ONE-LINE POWER DIAGRAM

480Y/277V, 3 PHASE, 4 WIRE

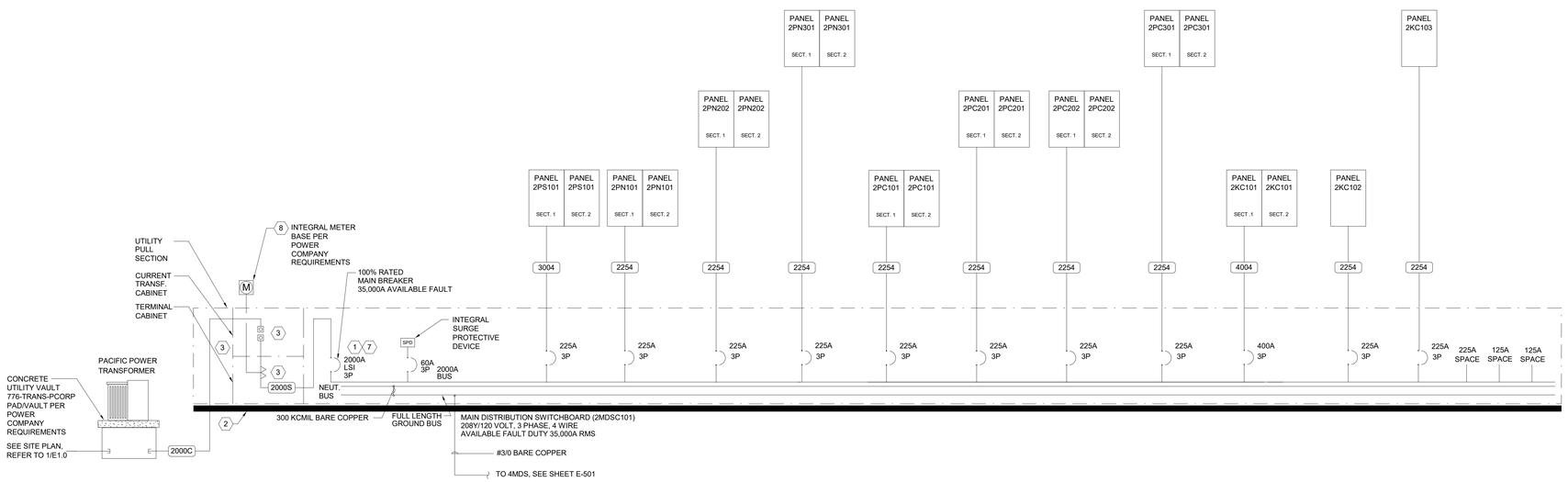

1 ONE-LINE POWER DISTRIBUTION DIAGRAM

120Y/208V, 3 PHASE, 4 WIRE

GENERAL SHEET NOTES

A. PROVIDE A SELECTIVELY COORDINATED EMERGENCY, STANDBY SYSTEMS TO 0.1 SECONDS, AND ELEVATORS TO 0.01 SECONDS.

B. CIRCUITS: UNLESS OTHERWISE NOTED, SUPPLY 42-CIRCUIT PANELS FOR EMERGENCY, MECHANICAL AND LIGHTING. SUPPLY 54-CIRCUIT PANELS FOR 208/120-VOLT AND STANDBY POWER. MINIMUM 225-AMP BUS. MINIMUM AIC RATING OF PANELS: IN MAIN ELECTRICAL ROOM, USE SAME RATING AS SWITCHBOARDS; OUTSIDE MAIN ELECTRICAL ROOM, ASSUME 22KAIC FOR 480/277-VOLT PANELS AND 208/120-VOLT PANELS.

C. LIGHTING CONTROL PANELS: PROVIDE MINIMUM 32-RELAY PANELS FOR PURPOSES OF CONTROLLING EXTERIOR LIGHTING CIRCUITS AND INTERIOR COMMONS AREA AND EGRESS PATH (CORRIDORS AND STAIRWELL) LIGHTING CIRCUITS. WHERE OCCUPANCY SENSORS ARE SHOWN IN EGRESS PATH AREAS, THOSE SENSORS CONNECT BACK TO LIGHTING CONTROL PANELS AS CONTROL INPUT. PROVIDE HIGH VOLTAGE BARRIER SECTION IN EACH PANEL FOR SEPARATION BETWEEN NORMAL /STANDBY AND EMERGENCY LIGHTING CIRCUITS.

SHEET KEYNOTES

1 PROVIDE SOLID-STATE BREAKER WITH LSI-TRIP SETTINGS.

2 PROVIDE 3-1/2 INCH HIGH CONCRETE HOUSEKEEPING PAD UNDER TRANSFORMER/SWITCHBOARD.

3 PULL SECTION AND CURRENT TRANSFORMER/TERMINAL CABINET PER POWER COMPANY REQUIREMENTS.

4 PV DC COMBINER BOXES LOCATED ON ROOF. INTEGRATED RAPID SHUTDOWN OPTION AND INTEGRATED DISCONNECT. SEE FINAL SHOP DRAWINGS FOR COUNT AND LOCATIONS.

5 PV INVERTERS ARE NEMA 3R RATED AND LOCATED ON THE ROOF (EXTERIOR). SEE FINAL SHOP DRAWINGS FOR INVERTER TYPE, SIZE, COUNT AND LOCATIONS.

6 SEE FINAL SHOP DRAWINGS FOR PV MODULE COUNT, CONDUIT/ CONDUCTOR SIZES AND ROOFTOP PLACEMENT.

7 PROVIDE ARC FLASH ENERGY REDUCTION FUNCTION INTEGRAL TO BREAKER WITH REMOTE MANUAL CONTROL AT ENTRY TO ROOM CONTAINING SWITCHBOARD

8 COORDINATE WITH UTILITY FOR NET METER DUE TO PRESENCE OF ON-SITE GENERATED POWER.

FEEDER SCHEDULE

Key

A, C, S, X	A = Aluminum C = Conduit only S = Service secondary X = Separately derived system
1004	4 #2 CU, 1 #8 CU GND., IN 1-1/4" C.
2254	4 #4/0 CU, 1 #4 CU GND., IN 2-1/2" C.
3004	4 - 350 kcmil CU, 1 #4 CU GND., IN 3" C.
4004	2 SETS OF (4 #3/0 CU, 1 #2 CU GND., IN 2" C.)
2000C	SIX 3" DIAMETER EMPTY CONDUIT WITH PULL CORD
2000S	6 SETS OF (4 - 400 kcmil CU IN 3" C.)

BRIC ARCHITECTURE, INC.
1233 NW NORTHRUP STREET, SUITE 100
PORTLAND, OR 97209 T 503.595.4900

New Middle School / High School

Seaside School District
1801 S. FRANKLIN STREET, SEASIDE, OR 97138
t: 503-738-5591

PRELIMINARY
REGISTERED PROFESSIONAL ENGINEER
NORMAN H. SEE
NORMAN CHRISTY
EXPIRES: 12/31/19

FOR REFERENCE ONLY

key plan

phase	BP2-PERMIT SET
date	6/15/2018
revisions	
project #	17007

SINGLE LINE DIAGRAMS - ELECTRICAL

E5.02

PROJECT 2017-0257
CONTACT Jeff Harrison
INTERFACE ENGINEERING
100 SW Main St.
Suite 1600
Portland, OR 97204
TEL 503.382.2266
FAX 503.382.2262
www.interfaceengineering.com

6/13/2018 12:07:50 PM
C:\Users\masonm\Documents\SSD MSHS Central-V17_masonm.rvt

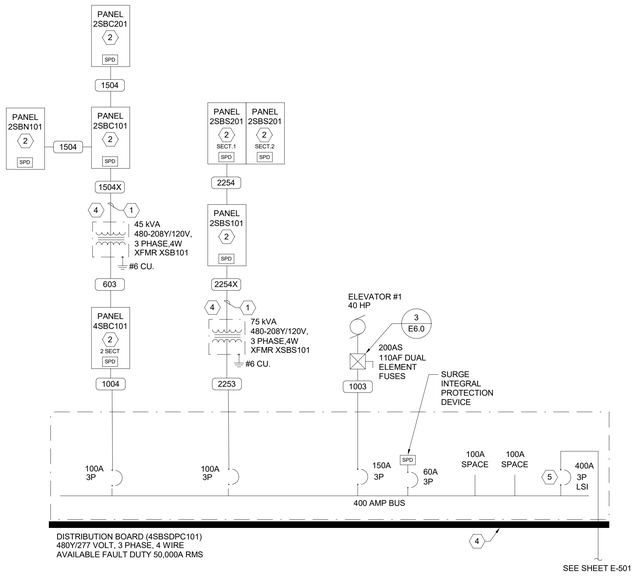

1 STANDBY ONE-LINE POWER DISTRIBUTION DIAGRAM

277Y/480V, 3 PHASE, 4 WIRE

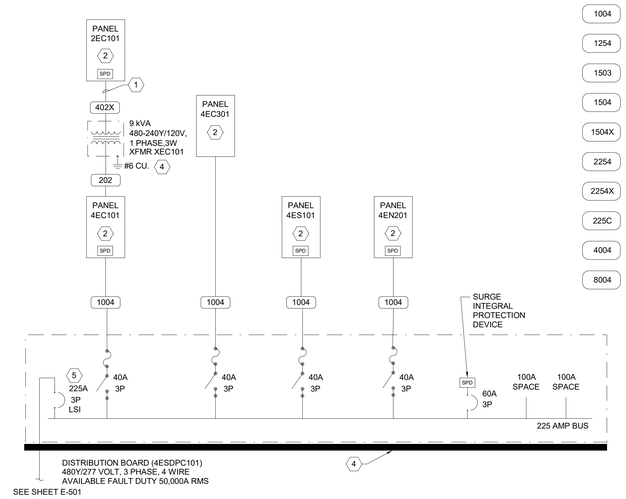

2 EMERGENCY ONE-LINE POWER DISTRIBUTION DIAGRAM

277Y/480V, 3 PHASE, 4 WIRE

FEEDER SCHEDULE

Key

A, C, S, X — A = Aluminum; C = Conduit only; S = Service secondary; X = Separately derived system

202	2 #12 CU, 1 #12 CU GND., IN 3/4" C.
402X	2 #8 CU, 1 #8 CU GND., IN 3/4" C.
1003	3 #2 CU, 1 #8 CU GND., IN 1-1/4" C.
1004	4 #2 CU, 1 #8 CU GND., IN 1-1/4" C.
1254	4 #1 CU, 1 #6 CU GND., IN 1-1/2" C.
1503	3 #1/0 CU, 1 #6 CU GND., IN 1-1/2" C.
1504	4 #1/0 CU, 1 #6 CU GND., IN 2" C.
1504X	4 #1/0 CU, 1 #6 CU GND., IN 2" C.
2254	4 #4/0 CU, 1 #4 CU GND., IN 2-1/2" C.
2254X	4 #4/0 CU, 1 #2 CU GND., IN 2-1/2" C.
225C	1 2-1/2" DIAMETER EMPTY CONDUIT WITH PULL STRING
4004	2 2" DIAMETER EMPTY CONDUIT WITH PULL STRING
8004	3 3" DIAMETER EMPTY CONDUIT WITH PULL STRING

GENERAL SHEET NOTES

A. PROVIDE A SELECTIVELY COORDINATED EMERGENCY, STANDBY SYSTEMS TO 0.1 SECONDS, AND ELEVATORS TO 0.01 SECONDS.

B. CIRCUITS: UNLESS OTHERWISE NOTED, SUPPLY 42-CIRCUIT PANELS FOR EMERGENCY, MECHANICAL AND LIGHTING. SUPPLY 54-CIRCUIT PANELS FOR 208/120-VOLT AND STANDBY POWER. MINIMUM 225-AMP BUS. MINIMUM AIC RATING OF PANELS: IN MAIN ELECTRICAL ROOM, USE SAME RATING AS SWITCHBOARDS; OUTSIDE MAIN ELECTRICAL ROOM, ASSUME 22KAIC FOR 480/277-VOLT PANELS AND 208/120-VOLT PANELS. PROVIDE PANELS FILLED WITH 20A/1P BREAKERS (EXCEPTION: BREAKERS NEEDED FOR LARGE EQUIPMENT -- SEE MECHANICAL AND KITCHEN EQUIPMENT SCHEDULES.

C. LIGHTING CONTROL PANELS: PROVIDE MINIMUM 32-RELAY PANELS FOR PURPOSES OF CONTROLLING EXTERIOR LIGHTING CIRCUITS AND INTERIOR COMMONS AREA AND EGRESS PATH (CORRIDORS AND STAIRWELL) LIGHTING CIRCUITS. WHERE OCCUPANCY SENSORS ARE SHOWN IN EGRESS PATH AREAS, THOSE SENSORS CONNECT BACK TO LIGHTING CONTROL PANELS AS CONTROL INPUT. PROVIDE HIGH VOLTAGE BARRIER SECTION IN EACH PANEL FOR SEPARATION BETWEEN NORMAL /STANDBY AND EMERGENCY LIGHTING CIRCUITS.

SHEET KEYNOTES

1. INSTALL FEEDER FROM TRANSFORMER SECONDARY TO MAIN BREAKER IN SWITCHBOARD / PANEL/DISCONNECT, NOT TO EXCEED 25 FEET PER NEC 240.21(C)(6).
2. PROVIDE FUSED PANELBOARD PER SPECIFICATIONS FOR COMPLIANCE WITH OESC ARTICLES 700 AND 702 FOR SELECTIVE COORDINATION TO THE BRANCH CIRCUIT OVERCURRENT PROTECTIVE DEVICE.
3. PROVIDE VOLTAGE BARRIER TO SEPARATE LIFE-SAFETY FROM NORMAL CIRCUITS.
4. PROVIDE 3-1/2 INCH HIGH CONCRETE HOUSEKEEPING PAD UNDER TRANSFORMER/SWITCHBOARD.
5. SOLID-STATE BREAKER WITH LSIG-TRIP SETTINGS.
6. PULL SECTION AND CURRENT TRANSFORMER/TERMINAL CABINET PER POWER COMPANY REQUIREMENTS.
7. GROUNDING ELECTRODE SYSTEM SHOWN. PROVIDE BONDING PER NEC / SPECIFICATION REQUIREMENTS.
8. PROVIDE GROUNDING TEST WELL WITH COVER AT EACH ROD LOCATION. INSTALL TEST WELL COVER FLUSH WITH FINISHED GRADE.
9. PROVIDE PEDESTAL MOUNTED SHIELDED PHOTOSENSOR AND INTEGRAL LIGHTING CONTROL PANEL (4 ZONE MINIMUM) WITH CLASS 1 0-10 VOLT WIRING FOR EACH RELAY. ROUTE LIGHTING CIRCUITS THROUGH RELAY CONTACTS SO THAT METER PEDESTAL CAN BOTH SWITCH AND DIM LIGHTING PER 365-DAY PROGRAMMED SCHEDULE, INCLUDING HOLIDAYS. CONTROL PANEL CONNECTS TO NEARBY PHONE DEMARC FOR SPORTS FIELD (IF INSTALLED UNDER BID ALTERNATE 7) SO THAT OWNER MAY REVISE SCHEDULE REMOTELY.

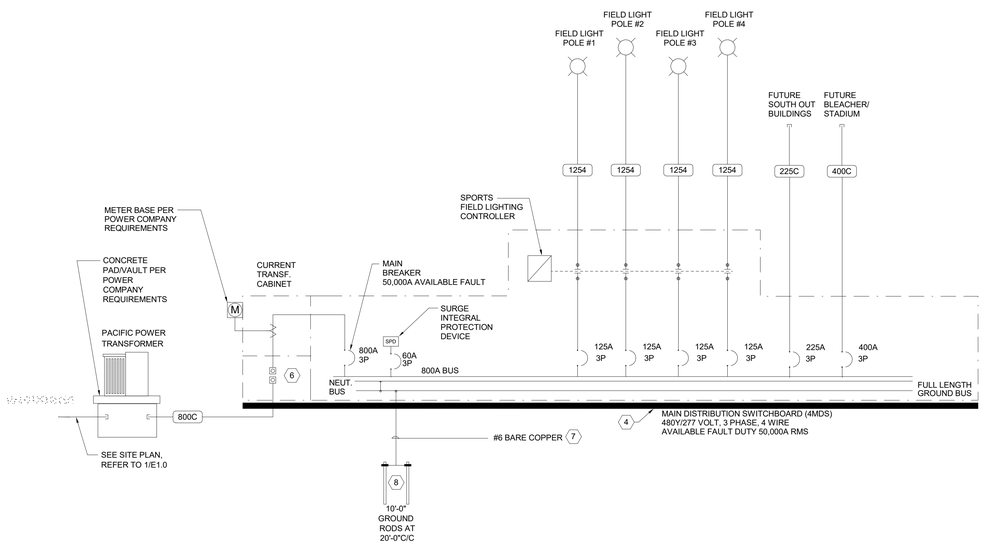

3 ONE-LINE POWER DISTRIBUTION DIAGRAM (BID ALT. #7)

277Y/480V, 3 PHASE, 4 WIRE

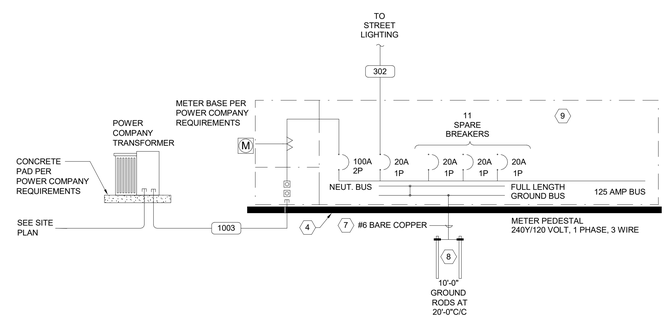

4ONE-LINE POWER DISTRIBUTION DIAGRAM

240Y/120 VOLTS, 1 PHASE, 3 WIRE

BRIC ARCHITECTURE, INC.
1233 NW NORTHRUP STREET, SUITE 100
PORTLAND, OR 97209 T 503.595.4900

New Middle School / High School

Seaside School District
1801 S. FRANKLIN STREET, SEASIDE, OR 97138
t: 503-738-5591

REGISTERED PROFESSIONAL ENGINEER — STATE OF OREGON — DAVID H. WEIL — PERFORMANCE CONSULTANTS
PRELIMINARY
EXPIRES: 12/31/19

FOR REFERENCE ONLY

key plan

phase	BP2-PERMIT SET
date	6/15/2018
revisions	
project #	17007

SINGLE LINE DIAGRAMS - ELECTRICAL

E5.03

PROJECT 2017-0257
CONTACT Jeff Harrison
INTERFACE ENGINEERING
100 SW Main St.
Suite 1600
Portland, OR 97204
TEL 503.382.2266
FAX 503.382.2262
www.interfaceengineering.com

6/13/2018 12:07:50 PM
C:\Users\masonm\Documents\SSD MSHS Central-V17_masonm.rvt

DETAIL KEYNOTES

1 MOUNT WEATHERPROOF TOGGLE SWITCH FOR PIT LIGHTING CIRCUIT BY TOP OF PIT LADDER.

2 PROVIDE NEMA 4 SURFACE MOUNTED LED GASKETED LUMINAIRE. FOUR FOOT WHITE POLYCARBONATE HOUSING WITH POLYCARBONATE DIFFUSER. LED, NOMINAL 6000 LUMENS, 4000K. BEGHELLI ILLUMINIA SERIES, METALUX, DAYBRITE, HUBBELL, LIGHTOLIER OR APPROVED. TYPICAL OF FOUR. MOUNT ONE LUMINAIRE ON EACH WALL. AVOID LOCATING LUMINAIRES DIRECTLY BEHIND BEAMS OR STRUCTURE THAT WOULD BLOCK LIGHT. WIRING SHALL BE IDENTIFIED FOR WET LOCATIONS.

3 CONNECT TO ELEVATOR PIT SUMP PUMP ON AREA OF PIT WALL CLOSEST TO SUMP HOLE WITH LIQUIDTIGHT FLEXIBLE CONDUIT. PROVIDE DEDICATED CIRCUIT. COORDINATE WITH DIVISION 22.

4 MOUNT 135° FIXED TEMPERATURE HEAT DETECTOR TO WITHIN 24 INCHES OF EACH SPRINKLER HEAD IN ELEVATOR MACHINE ROOM AND HOISTWAY, WHEN SPRINKLERED.

5 MOUNT SMOKE DETECTOR IN ELEVATOR LOBBY ON CEILING TO WITHIN 21 FEET OF CENTER OF ELEVATOR DOOR.

6 MOUNT SHUNT POWER MODULE TO WITHIN 24 INCHES OF STRIKE SIDE OF DOOR TO ELEVATOR MACHINE ROOM.

7 PROVIDE DEDICATED CIRCUIT. ROUTE INCOMING CIRCUIT TO LUMINAIRES UPSTREAM OF GFCI RECEPTACLE IN BOTH MACHINE ROOM AND ELEVATOR PIT, PER N.E.C. ARTICLES 620.23 AND 620.24.

8 PROVIDE FUSIBLE SHUNT TRIP POWER MODULE WITH CONTROL TRANSFORMER, TEST SWITCH, PILOT LIGHT, AUXILIARY CONTACTS AND ALARM CONTACTS. SIZE OF POWER MODULE AS NOTED ON DRAWINGS. BUSSMANN, FERRAZ-SHAWMUT, LITTLEFUSE OR APPROVED.

9 PROVIDE ADDRESSABLE FIRE ALARM CONTROL RELAY AND WIRING TO ELEVATOR CONTROLLER/DRIVE FOR ELEVATOR PRIMARY RECALL.

10 PROVIDE ADDRESSABLE FIRE ALARM CONTROL RELAY AND WIRING TO SHUNT TRIP CONTROL OF ELEVATOR POWER.

11 ROOM LIGHTING; SEE FLOOR PLAN FOR TYPE AND QUANTITY.

12 PROVIDE SEPARATE DEDICATED CIRCUITS AND LOCKABLE CIRCUIT BREAKERS IN PANEL '2SB-B' ELEVATOR CAR LIGHTS AND HVAC. INDICATE TYPE OF LOAD NEXT TO EACH CIRCUIT BREAKER. REFER TO FLOOR PLAN FOR LOCATION OF PANEL.

13 PROVIDE HEAT AND SMOKE DETECTORS AT THE TOP OF EACH ELEVATOR SHAFT, WHEN SPRINKLERED. PROVIDE LIQUIDTIGHT CONDUIT IN PIT WHEN SPRINKLERED.

14 CONNECT TO FIRE ALARM SYSTEM SIGNALING LINE CIRCUIT.

15 COORDINATE WALL MOUNTING SPACE FOR ELECTRICAL EQUIPMENT WITH ELEVATOR SUPPLIER/INSTALLER PRIOR TO ROUGH-IN.

16 PROVIDE DEDICATED PHONE LINE IN 3/4" CONDUIT TO TELEPHONE TERMINAL BOARD.

17 PROVIDE ADDRESSABLE FIRE ALARM CONTROL RELAY AND WIRING TO ELEVATOR CONTROLLER TO ACTIVATE FIREMAN'S HAT LIGHT IN ELEVATOR CAB UPON INITIATION OF SMOKE DETECTION IN ELEVATOR SHAFT OR MACHINE ROOM.

18 CONNECT TO FIRE ALARM SYSTEM FOR MONITORING OF CONTROL POWER.

19 PROVIDE ADDRESSABLE FIRE ALARM CONTROL RELAY AND WIRING TO ELEVATOR CONTROLLER FOR ELEVATOR ALTERNATE RECALL.

20 SUMP PUMP ALARM PANEL. COORDINATE ALARM PANEL LOCATION WITH OWNER AND DIVISION 22. PROVIDE DEDICATED CIRCUIT.

21 PROVIDE 1/2" CONDUIT AND CONTROL WIRE FROM SUMP PUMP ALARM PANEL TO SUMP PUMP HIGH LEVEL ALARM. COORDINATE WITH DIVISION 22.

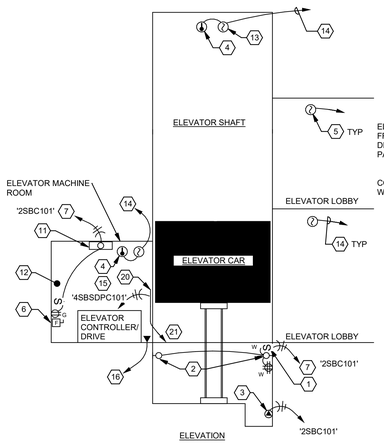

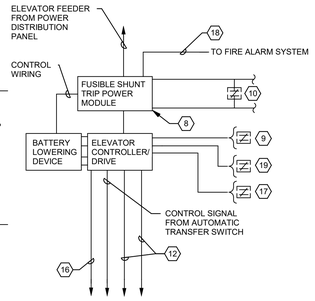

1 HYDRAULIC TYPE ELEVATOR ELECTRICAL

NO SCALE

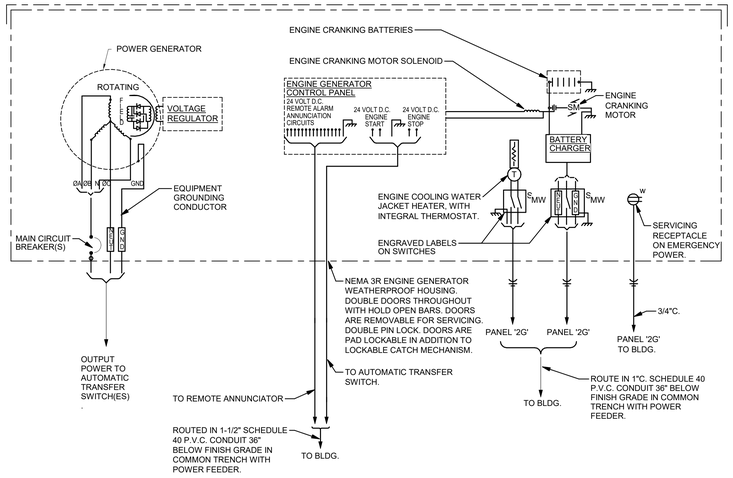

2 EXTERIOR ENGINE GENERATOR DIAGRAM

NO SCALE

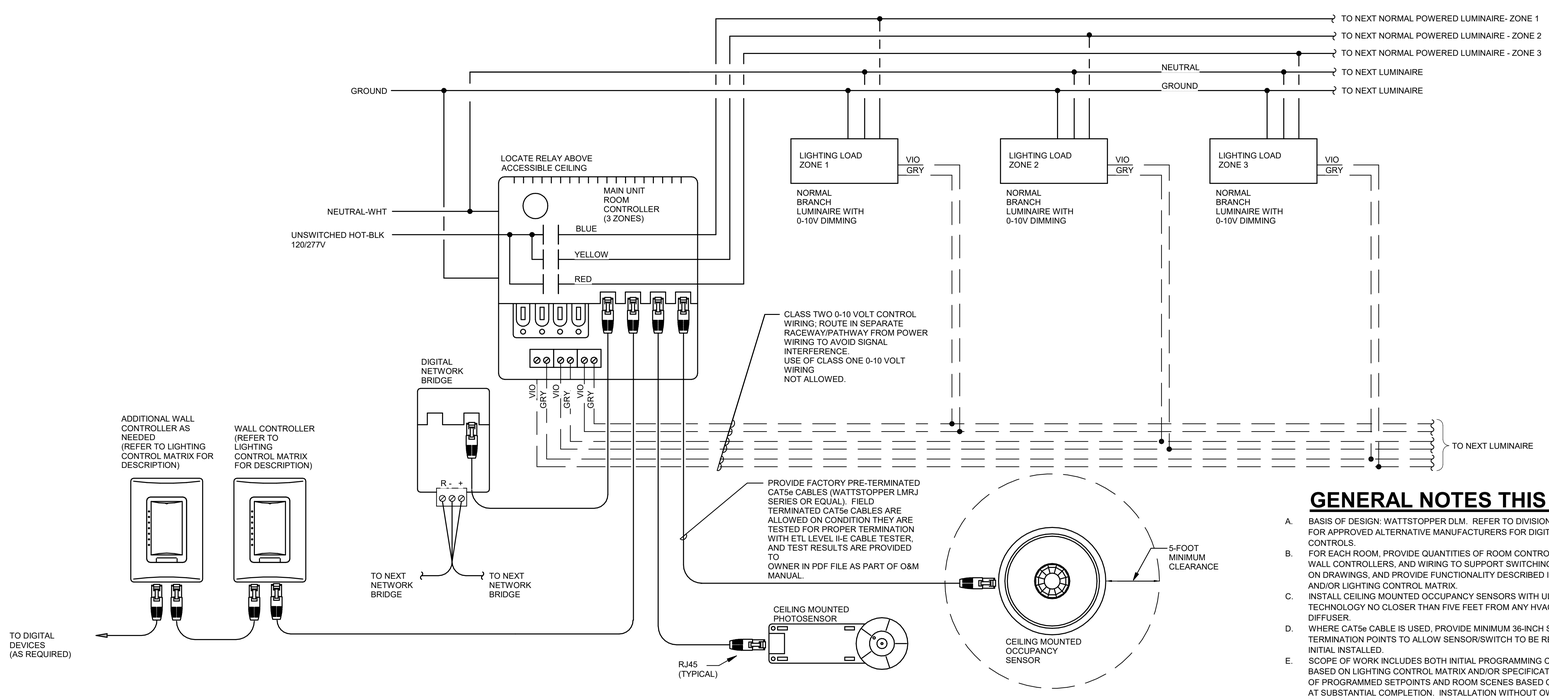

GENERAL NOTES THIS DETAIL

A. BASIS OF DESIGN: WATTSTOPPER DLM. REFER TO DIVISION 26 SPECIFICATIONS FOR APPROVED ALTERNATIVE MANUFACTURERS FOR DIGITAL LIGHTING CONTROLS.

B. FOR EACH ROOM, PROVIDE QUANTITIES OF ROOM CONTROLLERS, SENSORS, WALL CONTROLLERS, AND WIRING TO SUPPORT SWITCHING AND DIMMING ZONES ON DRAWINGS, AND PROVIDE FUNCTIONALITY DESCRIBED IN SPECIFICATIONS AND/OR LIGHTING CONTROL MATRIX.

C. INSTALL CEILING MOUNTED OCCUPANCY SENSORS WITH ULTRASONIC TECHNOLOGY NO CLOSER THAN FIVE FEET FROM ANY HVAC SUPPLY AIR DIFFUSER.

D. WHERE CAT5e CABLE IS USED, PROVIDE MINIMUM 36-INCH SLACK BETWEEN TERMINATION POINTS TO ALLOW SENSOR/SWITCH TO BE REPOSITIONED AFTER INITIAL INSTALLED.

E. SCOPE OF WORK INCLUDES BOTH INITIAL PROGRAMMING OF ROOM CONTROLLER BASED ON LIGHTING CONTROL MATRIX AND/OR SPECIFICATIONS, AND ADJUSTING OF PROGRAMMED SETPOINTS AND ROOM SCENES BASED ON OWNER FEEDBACK AT SUBSTANTIAL COMPLETION. INSTALLATION WITHOUT OWNER SIGN-OFF ON PROGRAMMED SETTINGS IS NOT COMPLETE.

F. CONTROLLERS AND DEVICES LOCATED IN PLENUM SPACES MUST BE UL 2043 LISTED; USE PLENUM RATED WIRING WHERE ROUTING IS EXPOSED IN PLENUM SPACES.

3 TYPICAL DIGITAL ROOM CONTROLLER WIRING DIAGRAM - UP TO 3 ZONES

NO SCALE

PROJECT 2017-0257
CONTACT Jeff Harrison
INTERFACE ENGINEERING
100 SW Main St.
Suite 1600
Portland, OR 97204
TEL 503.382.2266
FAX 503.382.2262
www.interfaceengineering.com

BR|IC ARCHITECTURE, INC.
1233 NW NORTHRUP STREET, SUITE 100
PORTLAND, OR 97209 T 503.595.4900

New Middle School / High School

Seaside School District
1801 S. FRANKLIN STREET, SEASIDE, OR 97138
t: 503-738-5591

REGISTERED PROFESSIONAL ENGINEER
PRELIMINARY
EXPIRES: 12/31/19

key plan

phase	BP2-PERMIT SET
date	6/15/2018
revisions	
project #	17007

DETAILS - ELECTRICAL

E7.01

6/13/2018 12:07:50 PM
C:\Users\masonm\Documents\SSD MSHS Central-V17_masonm.rvt

TECHNOLOGY SYMBOL LIST

NOTE: This is a standard symbol list and not all items listed may be used.

Abbreviations

AFF	ABOVE FINISHED FLOOR
AV	AUDIO VISUAL
ATS	AUTOMATIC TRANSFER SWITCH
BC	BARE COPPER
CA	CABLE
CATV	CABLE TELEVISION
CAT	CATEGORY
CLG	CEILING
CB	CIRCUIT BREAKER
CCTV	CLOSED CIRCUIT TELEVISION
COAX	COAXIAL
COM	COMMUNICATION
C	CONDUIT
CFCI	CONTRACTOR FURNISHED CONTRACTOR INSTALLED
CFOI	CONTRACTOR FURNISHED OWNER INSTALLED
CNTL	CONTROL
CR	CONTROL RELAY
EA	EACH
E	EMERGENCY
LC	FIBER OPTIC CONNECTOR
FDU	FIBER OPTIC DISTRIBUTION UNIT
GE	GROUNDING EQUALIZER
HH	HANDHOLE
IT	INFORMATION TECHNOLOGY
ITS	INFORMATION TRANSPORT SYSTEM
IG	ISOLATED GROUND
LED	LIGHT EMITTING DIODE
LAN	LOCAL AREA NETWORK
LV	LOW VOLTAGE
MSB	MAIN SWITCHBOARD
MCA	MINIMUM CIRCUIT AMPS
NP	NAMEPLATE
NEC	NATIONAL ELECTRIC CODE
NESC	NATIONAL ELECTRIC SAFETY CODE
NEMA	NATIONAL ELECTRICAL MANUFACTURERS ASSOCIATION
NEXT	NEAR END CROSS TALK
N	NEUTRAL
NA	NON AUTOMATIC
NC	NORMALLY CLOSED
N/A	NOT APPLICABLE
NTS	NOT TO SCALE
OS	OCCUPANCY SENSOR
OFCI	OWNER FURNISHED, CONTRACTOR INSTALLED
OFOI	OWNER FURNISHED, OWNER INSTALLED
PWR	POWER
QTY	QUANTITY
RF	RADIO FREQUENCY
RFI	REQUEST FOR INFORMATION
SATV	SATELLITE TELEVISION
SCP	SECURITY CONTROL PANEL
TBB	TELECOMMUNICATIONS BONDING BACKBONE
TE	TELECOMMUNICATIONS ENCLOSURE
TGB	TELECOMMUNICATIONS GROUNDING BUS BAR
TIA	TELECOMMUNICATIONS INDUSTRY ASSOCIATION
TR	TELECOMMUNICATIONS ROOM
TELE	TELEPHONE
TB	TERMINAL BOARD, TERMINAL BLOCK
TBD	TO BE DETERMINED
TWP	TWISTED PAIR
TWSP	TWISTED SHIELDED PAIR
TWST	TWISTED SHIELDED TRIAD
TYP	TYPICAL
UG	UNDERGROUND
UPS	UNINTERRUPTABLE POWER SUPPLY
UTP	UNSHIELDED TWISTED PAIR
WAN	WIDE AREA NETWORK
W	WIRE, WHITE
WAP	WIRELESS ACCESS POINT
WI-FI	WIRELESS FIDELITY
W/	WITH
W/O	WITHOUT
WAO	WORK AREA OUTLET

General

DEMOLISH

Raceways

CABLE RUNWAY, WIDTH AS INDICATED

CONDUIT AND CONDUCTORS ABOVE GRADE

CONDUIT AND CONDUCTORS BELOW GRADE OR SLAB

CONDUIT DOWN

CONDUIT SLEEVE

CONDUIT UP

CONDUIT/WIRING CONTINUATION

FLEXIBLE CONDUIT

HH HANDHOLE

PB PULL BOX

VT TELECOMMUNICATIONS VAULT

TELEPHONE BACKBOARD

GENERAL SHEET NOTES

A. COMMUNICATIONS RACEWAYS, TRAYS, AND OUTLETS ARE SHOWN DIAGRAMMATICALLY. LOCATIONS ARE APPROXIMATE UNLESS SPECIFICALLY DIMENSIONED. FIELD COORDINATE ALL WORK WITH OTHER TRADES.

B. CONSTRUCTION DETAILS SHOW TYPICAL INSTALLATION, UON, AND APPLY TO ALL COMMUNICATIONS WORK INCLUDED IN THE SUMMARY OF WORK FOR THIS PACKAGE EVEN THOUGH NOT SPECIFICALLY REFERENCED ON THE PLAN DRAWINGS.

C. THE TECHNOLOGY DRAWINGS ARE PART OF A LARGER SET OF DRAWINGS WHICH, WHEN COMPLETE, CONSISTS OF DRAWINGS LISTED BY THE "INDEX OF DRAWINGS." PARTIAL SETS OF DRAWINGS NOT INCLUSIVE OF ALL DISCIPLINES ARE INCOMPLETE AND SHOULD NOT BE DISTRIBUTED OR UTILIZED.

D. INSTALL PULL STRINGS IN ALL CONDUITS AT THE TIME OF CONDUIT AND CABLE INSTALLATION.

E. COORDINATE ALL DOOR ACCESS CONTROL FUNCTIONS WITH ADA DOOR ACTUATOR FUNCTION SUCH THAT DOOR MOTOR WILL NOT OPERATE WITHOUT PRIOR VALID CARD READ DURING SECURE MODE OPERATION.

SHEET INDEX

T0.01U SYMBOLS LISTS AND GENERAL NOTES - TECHNOLOGY

T2.11U UNDERGROUND FLOOR PLAN - SECTOR A1 - TECHNOLOGY
T2.12U UNDERGROUND FLOOR PLAN - SECTOR B - TECHNOLOGY
T2.13U UNDERGROUND FLOOR PLAN - SECTOR C - TECHNOLOGY

T3.01U UNDERGROUND ENLARGED PLANS - TECHNOLOGY

PROJECT 2017-0257
CONTACT Darcy Tucker

INTERFACE ENGINEERING

100 SW Main St.
Suite 1600
Portland, OR 97204
TEL 503.382.2266
FAX 503.382.2262
www.interfaceengineering.com

BR|IC ARCHITECTURE, INC.

1233 NW NORTHRUP STREET, SUITE 100
PORTLAND, OR 97209 T 503.595.4900

New Middle School / High School

Seaside School District

1801 S. FRANKLIN STREET, SEASIDE, OR 97138
t: 503-738-5591

REGISTERED PROFESSIONAL ENGINEER
OREGON
JULY 14, 1998
DAVID NORMAN CHESLEY

EXPIRES: 12/31/19

key plan

phase	BP2-PERMIT SET
date	6/15/2018
revisions	
project #	17007

SYMBOLS LISTS AND GENERAL NOTES - TECHNOLOGY

T0.01U

6/14/2018 8:37:02 AM
C:\Users\sladea.IECE\Documents_Revit Local Files\SSD MSHS Central-V17_sladea@interfaceeng.com.rvt

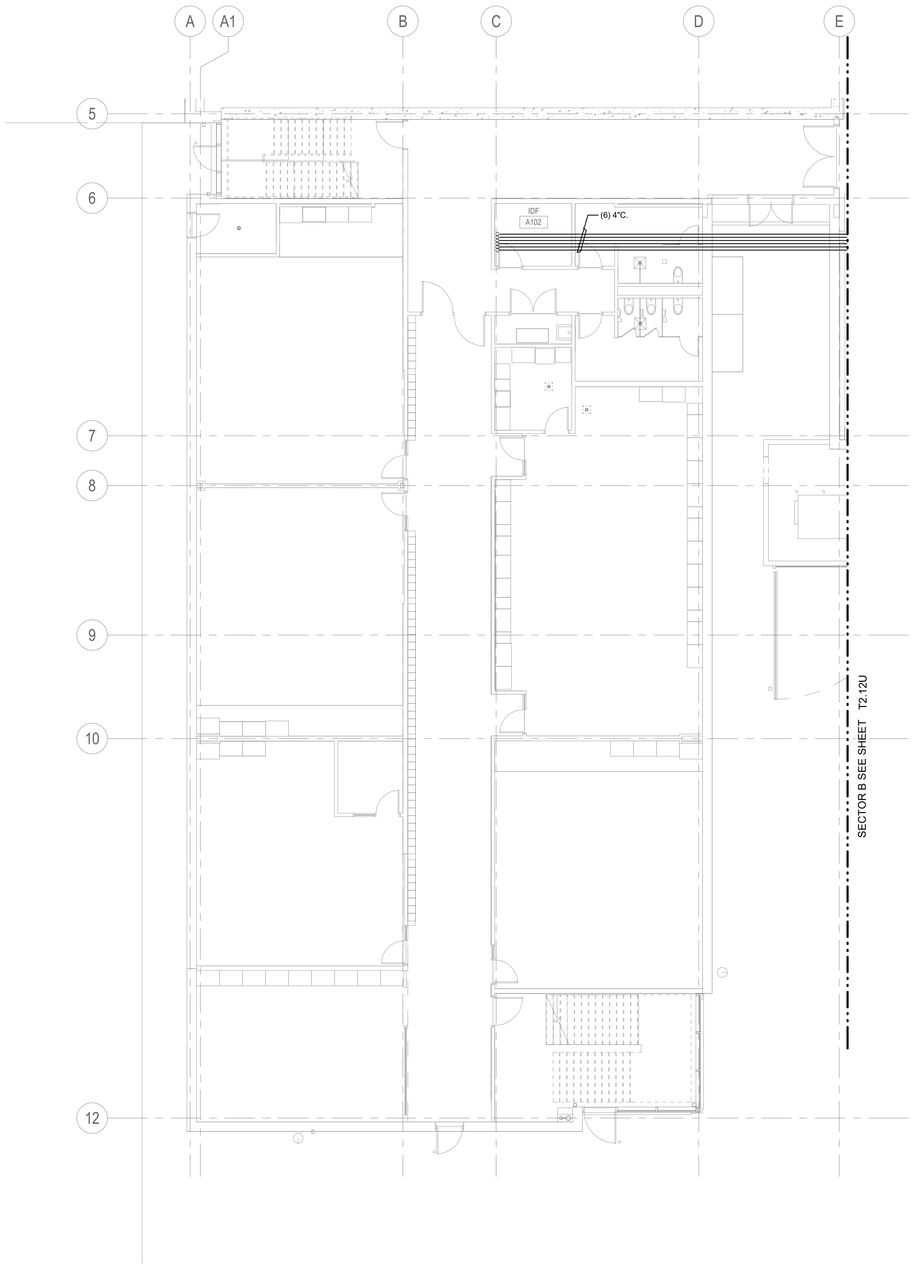

1 UNDERGROUND FLOOR PLAN - SECTOR A1 - TECHNOLOGY

0' 4' 8' 16'
1/8" = 1'-0"

NORTH

BR|IC
ARCHITECTURE, INC.
1233 NW NORTHRUP STREET, SUITE 100
PORTLAND, OR 97209 T 503 595 4900

New Middle School / High School

Seaside School District
1801 S. FRANKLIN STREET, SEASIDE, OR 97138
t: 503-738-5591

REGISTERED PROFESSIONAL ENGINEER
OREGON
JULY 14, 1998
DAVID NORMAN CHESLEY
EXPIRES: 12/31/19

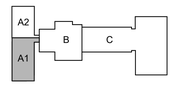

key plan

phase	BP2-PERMIT SET
date	6/15/2018
revisions	
project #	17007

UNDERGROUND FLOOR PLAN - SECTOR A1 - TECHNOLOGY

T2.11U

PROJECT 2017-0257
CONTACT Darcy Tucker
INTERFACE ENGINEERING
100 SW Main St.
Suite 1600
Portland, OR 97204
TEL 503.382.2266
FAX 503.382.2262
www.interfaceengineering.com

6/14/2018 8:37:03 AM
C:\Users\sladea.IEICE\Documents_Revit Local Files\SSD MSHS Central-V17_sladea@interfaceeng.com.rvt

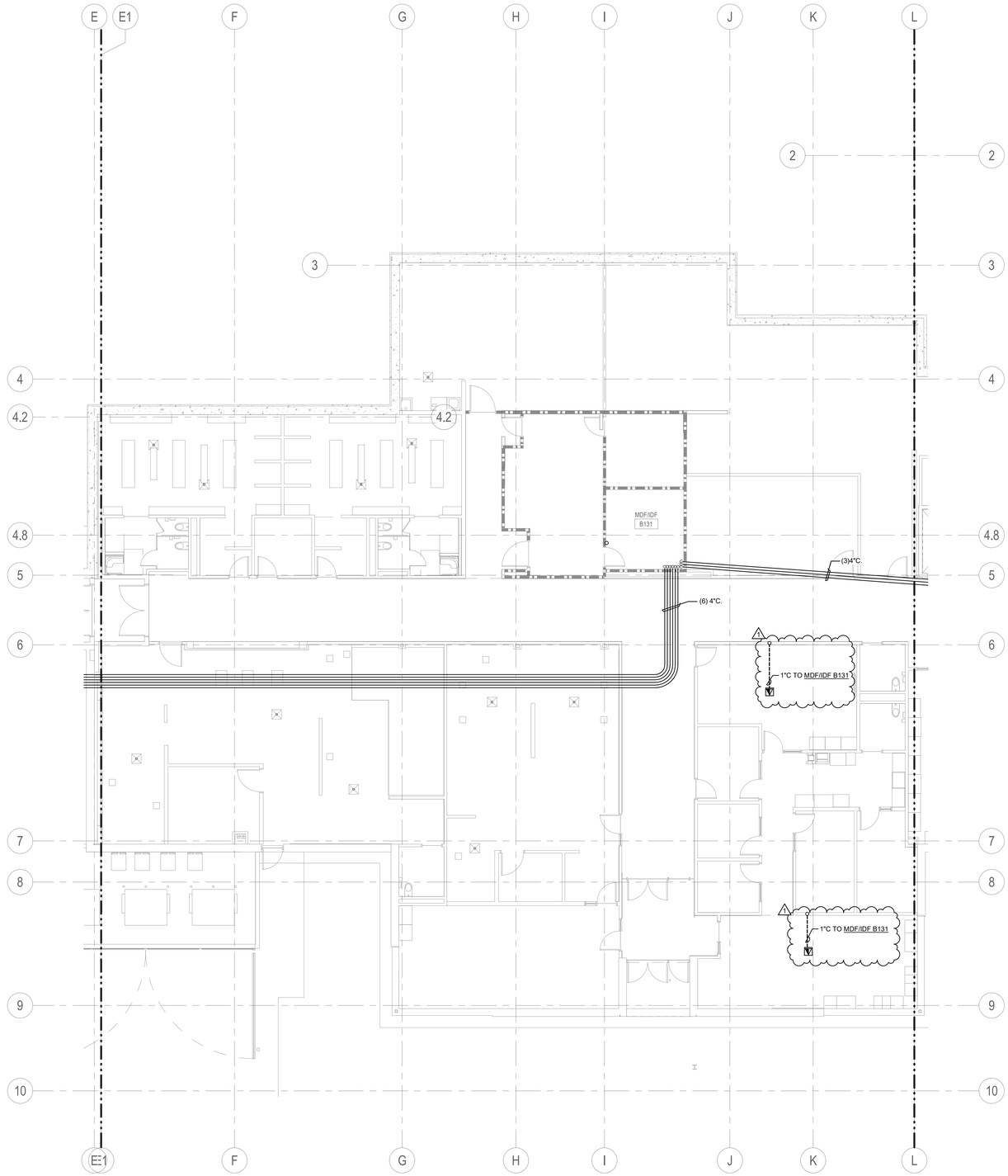

1 UNDERGROUND FLOOR PLAN - SECTOR B - TECHNOLOGY

0' 4' 8' 16'
1/8" = 1'-0"

NORTH

BR|IC ARCHITECTURE, INC.
1233 NW NORTHRUP STREET, SUITE 100
PORTLAND, OR 97209 T 503.595.4900

New Middle School / High School

Seaside School District
1801 S. FRANKLIN STREET, SEASIDE, OR 97138
t: 503-738-5591

REGISTERED PROFESSIONAL ENGINEER
82190PE
OREGON
JULY 14, 2006
DAVID NORMAN CHESLEY
EXPIRES: 12/31/19

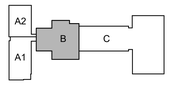

key plan

phase	Bid Package 2
date	6/20/2018
revisions	
BP2 - ADD 1	07/03/2018
project #	17007

UNDERGROUND FLOOR PLAN - SECTOR B - TECHNOLOGY

T2.12U

PROJECT 2017-0257
CONTACT Darcy Tucker
INTERFACE ENGINEERING
100 SW Main St.
Suite 1600
Portland, OR 97204
TEL 503.382.2266
FAX 503.382.2262
www.interfaceengineering.com

7/3/2018 3:06:01 PM
C:\Users\masonm\Documents\SSD MSHS Central-V17_jasonmatheis@interfaceeng.com.rvt

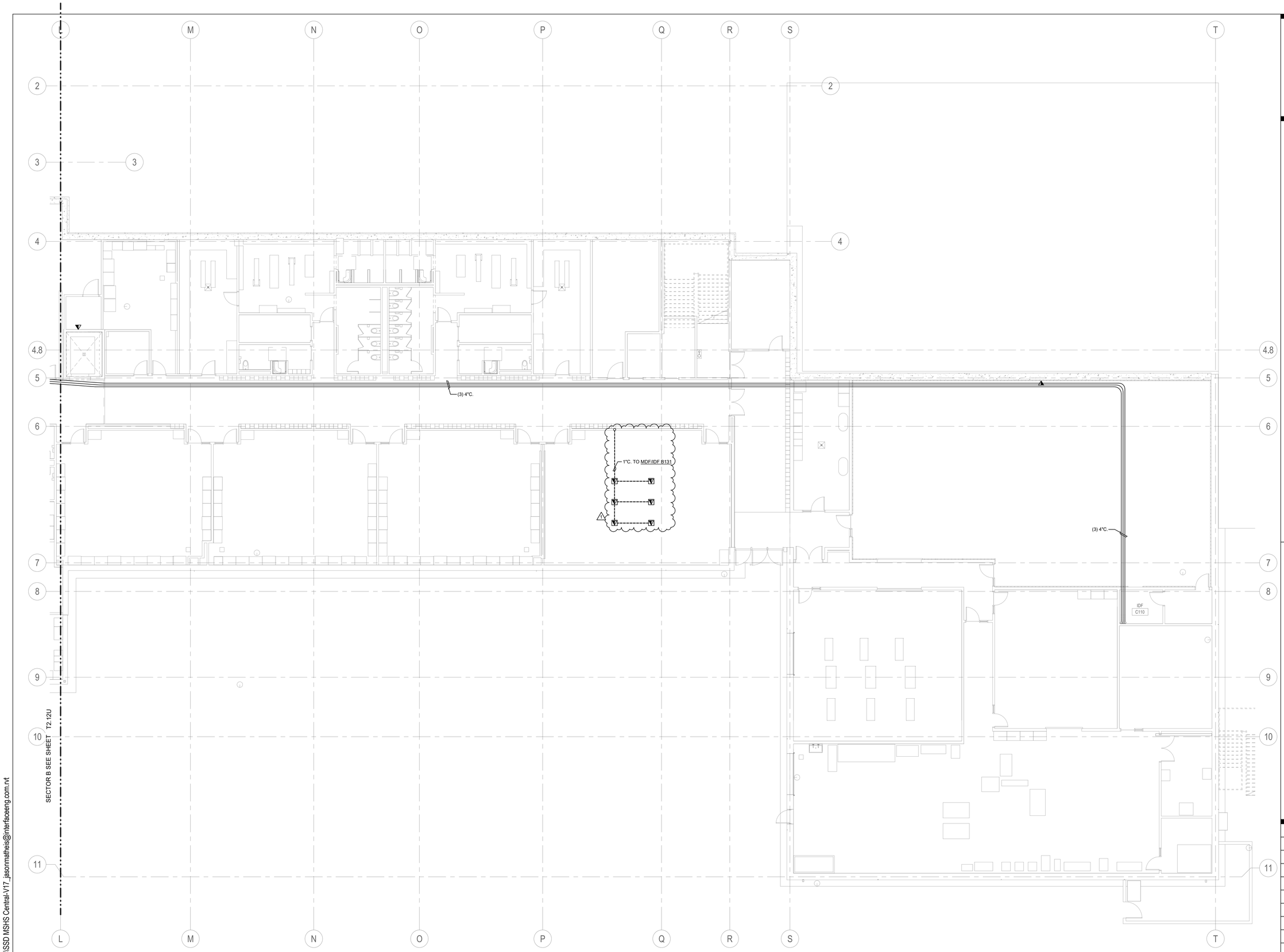

1 UNDERGROUND FLOOR PLAN - SECTOR C - TECHNOLOGY

0' 4' 8' 16'
1/8" = 1'-0"

NORTH

PROJECT 2017-0257
CONTACT Darcy Tucker

INTERFACE ENGINEERING
100 SW Main St.
Suite 1600
Portland, OR 97204
TEL 503.382.2266
FAX 503.382.2262
www.interfaceengineering.com

BR|IC
ARCHITECTURE, INC.
1233 NW NORTHRUP STREET, SUITE 100
PORTLAND, OR 97209 T 503.595.4900

New Middle School / High School

Seaside School District
1801 S. FRANKLIN STREET, SEASIDE, OR 97138
t: 503-738-5591

REGISTERED PROFESSIONAL ENGINEER
92190PE
OREGON
MAY 14, 1996
DAVID NORMAN CHRISTY
EXPIRES: 12/31/19

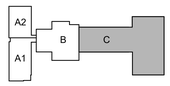

key plan

phase	Bid Package 2
date	6/20/2018
revisions	
BP2 - ADD 1	07/03/2018
project #	17007

UNDERGROUND FLOOR PLAN - SECTOR C - TECHNOLOGY

T2.13U

7/3/2018 3:06:01 PM
C:\Users\masonm\Documents\SSD MSHS Central-V17_jasonmatheis@interfaceeng.com.rvt

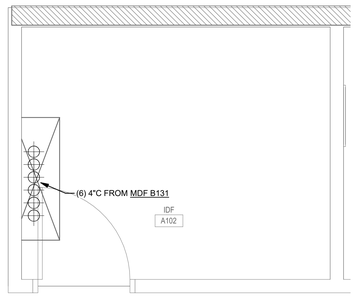

1 ENLARGED IDF A102 UNDERGROUND

0' 1' 2' 4'
1/2" = 1'-0"

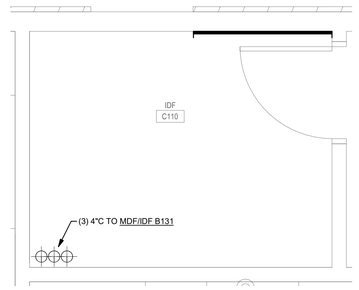

2 ENLARGED IDF B132 UNDERGROUND

0' 1' 2' 4'
1/2" = 1'-0"

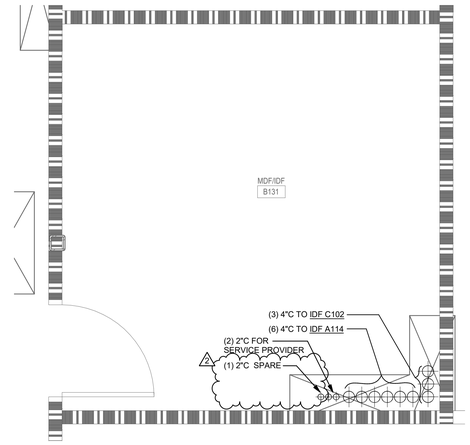

3 ENLARGED MDF/IDF B131 UNDERGROUND

0' 1' 2' 4'
1/2" = 1'-0"

BR|IC
ARCHITECTURE, INC.
1233 NW NORTHRUP STREET, SUITE 100
PORTLAND, OR 97209 T 503.595.4900

New Middle School / High School

Seaside School District
1801 S. FRANKLIN STREET, SEASIDE, OR 97138
t: 503-738-5591

REGISTERED PROFESSIONAL ENGINEER
82190PE
OREGON
JULY 14, 2017
DAVID NORMAN CHESLEY
EXPIRES: 12/31/19

k e y p l a n

phase	Bid Package 2
date	6/20/2018
revisions	
BP2 - ADD 2	07/09/2018
project #	17007

UNDERGROUND
ENLARGED PLANS -
TECHNOLOGY

T3.01U

PROJECT 2017-0257
CONTACT Darcy Tucker
INTERFACE ENGINEERING
100 SW Main St.
Suite 1600
Portland, OR 97204
TEL 503.382.2266
FAX 503.382.2262
www.interfaceengineering.com

7/9/2018 11:22:29 AM
C:\Users\quinlanb\Documents\SSD MSHS Central-V17_quinlanb.rvt

GENERAL NOTES

- CONDUIT SIZE, QUANTITY AND LOCATIONS ARE RECOMMENDATIONS OF THE AV CONSULTANT AND ARE RECOMMENDATIONS ONLY. ACTUAL ROUTING, SIZING AND LOCATION OF CONDUIT TO BE CONFIRMED BY ELECTRICAL ENGINEER OR ELECTRICAL CONTRACTOR.
- REFER TO ELECTRICAL DRAWINGS FOR ACTUAL CONDUIT AND ROUGH IN REQUIREMENTS. IF CUSTOM ROUGH IN BOXES DIFFER BETWEEN ELECTRICAL AND AV DRAWINGS AV DRAWINGS TAKE PRIORITY.
- VERIFY FIT AND FINISH OF ALL ELECTRICAL BOXES. COORDINATION OF TRIM DEVICE WITH ROUGH IN PROVIDED BY THE ELECTRICAL CONTRACTOR SHALL BE THE RESPONSIBIITY OF THE SYSTEMS INTEGRATOR.
- GENERAL CONTRACTOR IS RESPONSIBLE FOR PROVIDING ALL STRUCTURAL ATTACHMENT POINTS FOR AUDIO AND VISUAL EQUIPMENT TO STRUCTURE. DRAWINGS SHOWING STRUCTURAL ATTACHMENT POINTS ARE FOR REFERENCE ONLY.
- SYMBOL INDICATES CONDUIT REQUIREMENT. MULTIPLE SYMBOLS ON THE SAME LINE INDICATES MULTIPLE CONDUITS ARE REQUIRED BETWEEN THOSE DEVICES.

GENERAL SYMBOLS

SYMBOL	DESCRIPTION
X / SHEET NO.	OFF SHEET DRAWING NOTES
1	ON SHEET DRAWINGS NOTES
(CABLE DES)	CABLE OR WIRE TYPE DESIGNATION
X	ON SHEET CABLE CONNECTION ("X" DENOTES MATING CONNECTION)
A	CABLE TERMINATION OR CONNECTOR TYPE

ELECTRICAL SYMBOLS

SYMBOL	FUNCTION
	CONDUIT TRANSITION (TYPICALLY ABOVE CEILING)
	CONDUIT TO NO CONDUIT TRANSITION OR USED TO SHOW CONDUIT PASSING OVER OR UNDER OTHER CONDUITS.
	CONDUIT OR CABLE BUNDLE CONTENTS

SHEET DETAIL IDENTIFICATION (BUG)

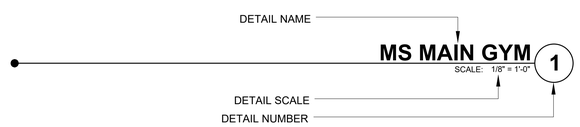

PRODUCTION INTERCOM LEGEND

PC1 - TWO CHANNEL BELT PACK STATION - SINGLE GANG - @18" AFF TYPICAL STUD WALL
PC2 - TWO CHANNEL HEADSET STATION - TWO GANG - ABOVE COUNTER
PC4 - TWO CHANNEL SPEAKER STATION - FOUR GANG - @ 52" AFF TYPICAL STUD WALL
PCR - RACK MOUNT REMOTE STATION - 1 RU RACK - AS SHOWN ON SMP ELEVATION
NOTE ALL ROUGH IN DEVICES ARE MINIMUM 2.75" DEEP BOXES

DRAWING LEGEND

AV0.1 LEGENDS & NOTES
AV0.2 CONNECTION DETAILS
AV1.1 CAFE / STAGE AV SYSTEMS FLOOR PLAN
AV1.2 MS / HS GYM AV SYSTEMS FLOOR PLAN
AV2.1 CAFE / STAGE AV SYSTEMS CEILING PLAN
AV2.2 MS / HS GYM AV SYSTEMS CEILING PLAN
AV3.1 MS / HS GYM AV SYSTEMS ELEVATIONS
AV3.2 CAFE / STAGE AV SYSTEMS ELEVATIONS

BRC Acoustics & Audiovisual Design

NOT FOR CONSTRUCTION:
THIS DRAWING IS FOR REFERENCE ONLY AND IS NOT CONSIDERED A CONSTRUCTION DRAWING. CONCEPTS AND PLACEMENT OF EQUIPMENT ARE FOR THE PURPOSE OF ESTIMATING AND SPACE PLANNING.

ROUGH-IN LEGEND

SYMBOL	DEVICE DESCRIPTION	ROUGH-IN	LOCATION
	PHONE / DATA LOCATION (PROVIDED BY OWNER) MAY TRIM OUT IN OTHER ROUGH IN DEVICE	PROVIDE (2 EA) RJ-45 DATA TERMINATIONS	AS SHOWN ON PLAN
ANT	WIRELESS MIC / ASSISTIVE LISTENING SYSTEM ANTENNAE	4 SQ DEEP BOX WITH SINGLE GANG RING	MOUNT AT 18' AFF OR 9' ABOVE TOP BLEACHER
AVJB	LOCAL EQUIPMENT RACK OR CREDENZA LOCATION (MOUNT AS REQUIRED FOR CASEWORK ON SITE)	ROUGH IN AS REQUIRED BY CONDUIT QUANTITY	SEE DESCRIPTION
CTRL	WALL MOUNT CONTROL PANEL	CUSTOM ROUGH IN PROVIDED BY AV CONTRACTOR	MOUNT AT 52" AFF OR AT SWITCH HEIGHT
JBOX	J-BOX FOR WIRE PULL TO FACE OF BLEACHERS	ROUGH IN AS REQUIRED BY CONDUIT QUANTITY	MOUNT AT 52" AFF OR AT SWITCH HEIGHT
J	J-BOX WITH POWER FOR PROJECTOR SCREEN CEILING BOX HOUSING (PROVIDE LOCAL SWITCH DISCONNECT)	PROVIDE 120VAC AT LEFT END OF PROJECTOR SCREEN	MOUNT AS DIRECTED ON PLAN
S	CEILING SPEAKER (PENDENT MOUNT)	4 SQ BOX WITH BLANK COVER WITH WHIP	MOUNT AT BOTTOM SIDE OF DECK
S	GYMNASIUM PRECEDENCE SPEAKER	4 SQ DEEP BOX WITH SINGLE GANG RING	MOUNT AT 26' ABOVE GYMNASIUM FLOOR
S1	WALL SPEAKER	4 SQ DEEP BOX WITH SINGLE GANG RING	AS SHOWN ON PLANS
VP	CEILING MOUNTED VIDEO PROJECTOR (SOME PROJECTORS PROVIDED UNDER SEPARATE SECTION)	4 SQ DEEP BOX WITH TWO GANG RING	MOUNT AT CEILING NEAR VIDEO PROJECTOR
WP(X)	WALL MOUNTED AV PLATE (CONNECTIONS WILL VARY BY PLATE LOCATION	SEE DETAIL SCHEDULE SHEETS AV5.2, AV5.3	MOUNT AT 18" AFF OR OUTLET HEIGHT
	DOUBLE DUPLEX POWER OUTLET (FOR VIDEO EQUIPMENT ONLY)	PER NEC	PER NEC
	DUPLEX POWER OUTLET (FOR VIDEO EQUIPMENT ONLY)	PER NEC	PER NEC

WIRE TYPE DESCRIPTION

WIRE LEGEND

TYPE	QTY	DESCRIPTION	MANUFACTURER	NON PLENUM	PLENUM	CONDUCTORS
AD	X	AUDIO (DIGITAL MIC)	POLYCOM	CUSTOM	CUSTOM	SEE CABLE
AL	X	AUDIO (LINE)	BELDEN	9451	9451P	1 PR W/SHLD
AM	X	AUDIO (MICROPHONE)	BELDEN	9451	9451P	1 PR W/SHLD
AN	X	AUDIO (NETWORK OVER CAT CABLE)	GEPCO	-	2131611E	4 PR CAT CABLE W/SHLD
AP	X	MULTIPAIR AUDIO	BELDEN	1817R	1817R	8 PR W/SHLD
CAT	X	DIGITAL MEDIA CAT CABLE	CRESTRON	DM-CBL-NP-SP500	DM-CBL-P-SP500	(M) 4 PR CATSE / (D) 4 PR SPECIAL (DMNet) 1PR 18GA PWR/1 PR DATA
CG	X	CONTROL (GENERAL)	BELDEN	9751	82743	6 PR 20-22 GA
CN	X	DATA	BELDEN	1583A	1583A	4 PR CAT 5
CP	X	CONTROL (NETWORK)	CRESTRON	CRESNET	CRESNET-P	1 PR 18GA TWISTED (UNSHLD) 1 PR 22GA TWISTED (SHLD)
CQ	X	QUICK MEDIA SIAMESE CABLE	CRESTRON	CRESCAT-QM-NP	CRESCAT-QM-P	4 PR CATEGORY CABLE 1 PR 18GA PWR / 1 PR 22GA DATA
CR	X	CONTROL (IR)	BELDEN	9451	9451P	1 PR W/SHLD
CS	X	CONTROL (SERIAL)	BELDEN	9451	9451P	1 PR W/SHLD
D	X	DATA	BELDEN	1583A	1583A	4 PR CAT 5
DM	X	DIGITAL MEDIA 8G STP CABLE	CRESTRON	DM-CBL-8G-NP-SP500	DM-CBL-8G-P-SP500	(SPECIAL) 4 PR CAT (X) SHLD
DVI	X	DVI MOLDED CABLE	VARIES	-	-	DVI - DVI
EXT(X)	X	EXTRON MOLDED CABLE	EXTRON	(X) DENOTE NUMBER		VARIOUS
IM	X	PRODUCTION INTERCOM	WEST PENN	D-510	D-510	2 PR W/SHLD
HDMI	X	HDMI MOLDED CABLE	VARIES	-	-	HDMI - HDMI
LNK(X)	X	MANUFACTURER LINK CABLE	VARIES	1583A	1583A	4 PR CAT 5
P	X	LOW VOLTAGE POWER	BELDEN	8461	8461	18/2
R	X	RGBHV	LIBERTY	RGB5C	RGB5C-PLN	MINI HI RES
SL	X	SPEAKER (8 OHM) LONG	WEST PENN	C-210	C-210	10/2
SH	X	SPEAKER (8 OHM) SHORT	BELDEN	5100UE	6100UE	12/2
SZ	X	SPEAKER (70 VOLT)	BELDEN	5300UE	6300UE	18/2
T	X	TELEPHONE/DATA	BELDEN	1583A	1583A	4 PR CAT 5
VS	X	COMPOSITE VIDEO (SHORT)	BELDEN	1505A	1506A	RG-59/U
VL	X	COMPOSITE VIDEO (LONG)	BELDEN	1694A	1695A	RG-6/U
VN	X	VIDEO NETWORK	GEPCO	-	10GX52F	4 PR CAT 6A W/ SHIELD
VDO(X)	X	VIDEO ADAPTER	VARIOUS	(X) DENOTE NUMBER		VARIOUS
Y	X	S-VIDEO (Y/C)	BELDEN	QTY (2) 1505A	QTY (2) 1506A	(2) RG-59/U

BRIC ARCHITECTURE, INC.
1233 NW NORTHRUP STREET, SUITE 100
PORTLAND, OR 97209 T 503 595 4900

Seaside K-12 Campus
Seaside School District
1801 S. FRANKLIN STREET, SEASIDE, OREGON 97138
t: 503-738-5591

NOT FOR CONSTRUCTION

phase	BP2-PERMIT SET
date	6/15/2018
revisions	
project #	17007

LEGENDS

AV0.1

1/30/2018 4:24:40 PM
C:\BRIC Projects\17007 SSD-MSHS_christie.sterne.rvt

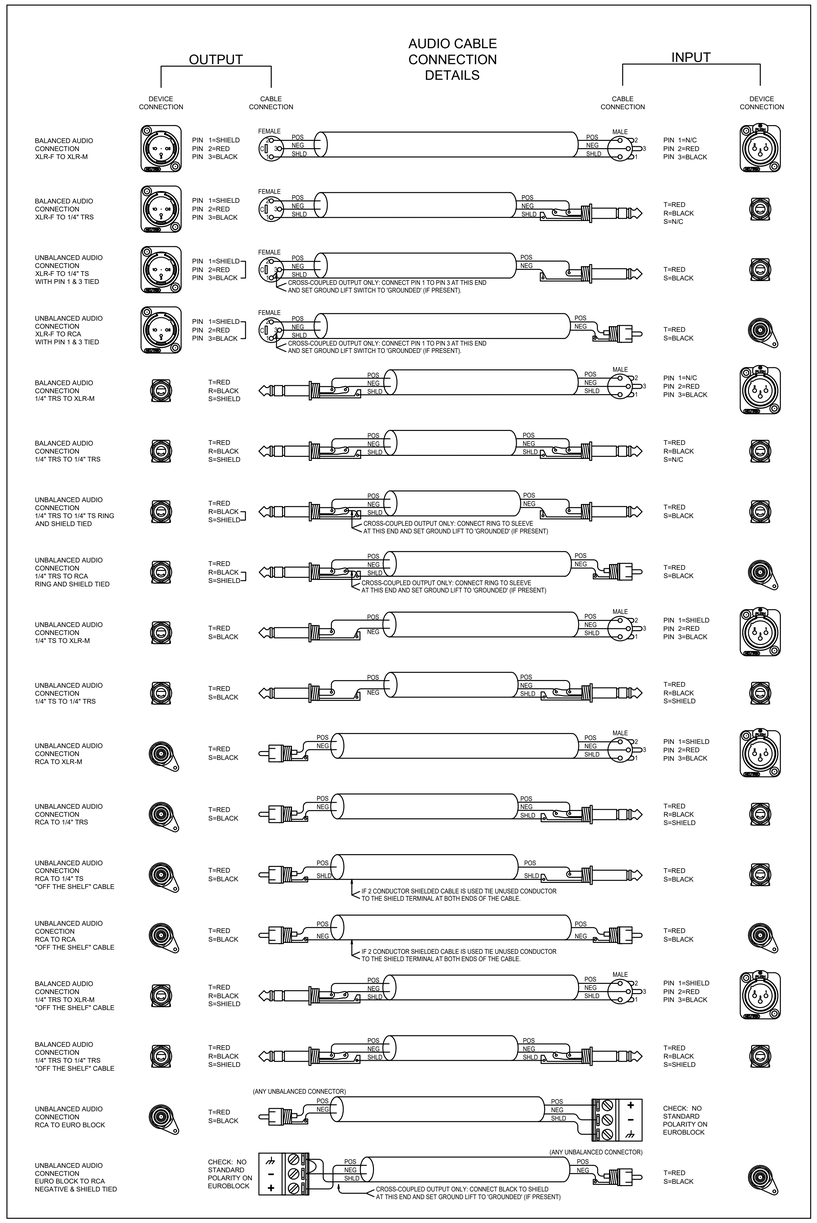

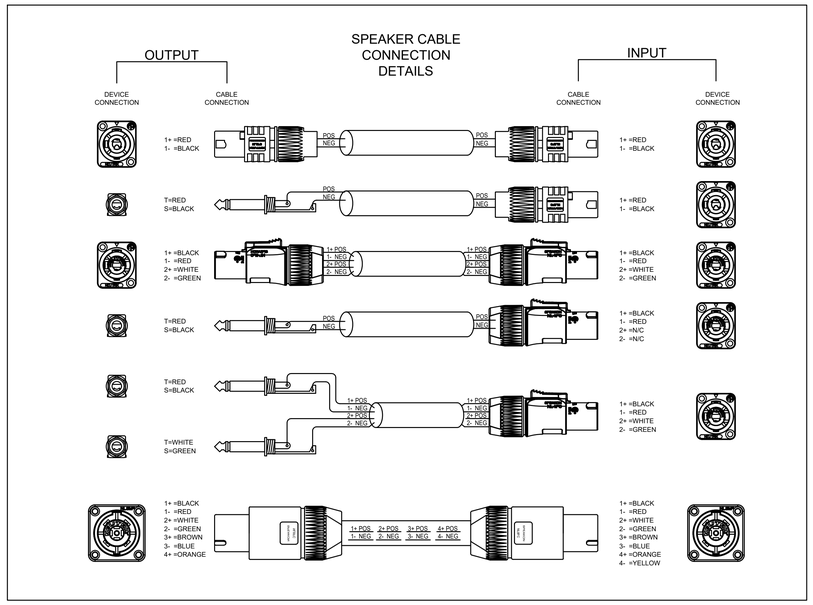

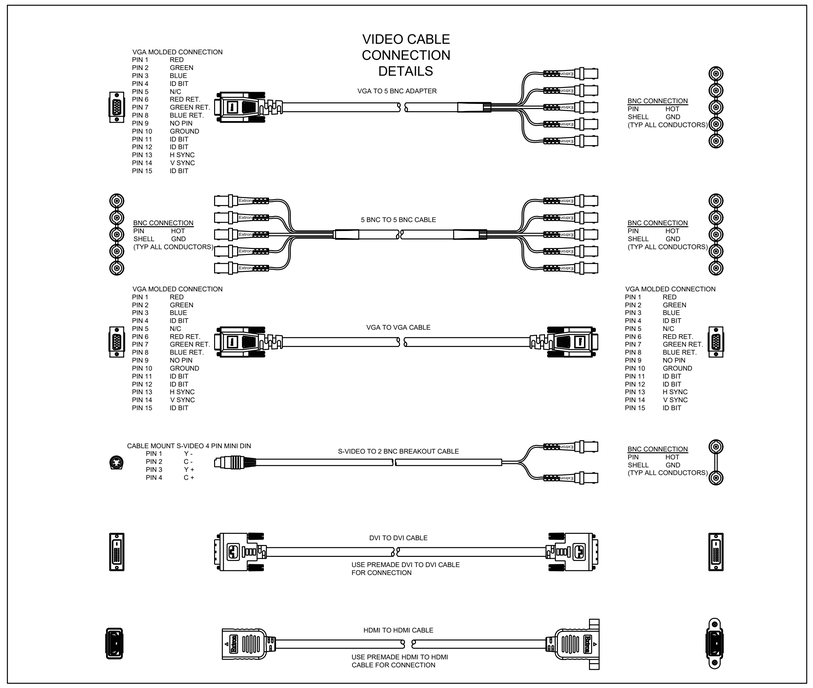

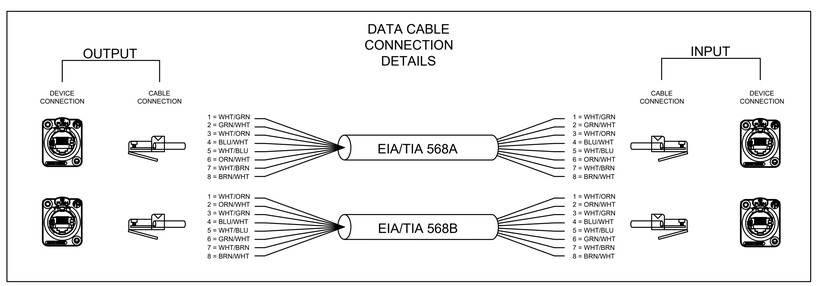

CONNECTOR LEGEND

A	CABLE MOUNT XLR FEMALE	PIN 1 PIN 2 PIN 3	GND HOT NEG
B	CABLE MOUNT XLR MALE	PIN 1 PIN 2 PIN 3	GND HOT NEG
C	CABLE MOUNT 1/4" TRS	TIP RING SLEVE	HOT NEG GND
D	CABLE MOUNT 1/4" TS	TIP SLEVE	HOT GND
E	CABLE MOUNT RCA MALE	PIN SHELL	HOT GND
F	CABLE MOUNT 1/8" MINI TRS	TIP RING SLEVE	HOT OR LEFT NEG OR RIGHT GND
G	MULTI POSITION PHOENIX CONNECTOR CONSULT MANUFACTURERS EQUIPMENT MANUAL FOR EXACT PIN OUTS. (LINE LEVEL AUDIO)		
H	RJ-45, RJ-48, EIA 568A OR EIA 568B CONSULT MANUFACTURERS EQUIPMENT MANUAL FOR EXACT PIN OUTS.		
I	CABLE MOUNT RF CONNECTOR	PIN SHELL	HOT GND
J	CABLE MOUNT S-VIDEO 4 PIN MINI DIN	PIN 1 PIN 2 PIN 3 PIN 4	Y - C - Y + C +
K	CABLE MOUNT BNC FEMALE	PIN SHELL	HOT GND
L	1/8 VIDEO COMBO	(TIP)	LEFT VIDEO GROUND RIGHT
M	BARRIER STRIP	POS NEG GND	
N	NEUTRIK MINICON CABLE ADAPTER FROM AUDIO TECHNICA BOUNDARY MICROPHONE TO FOUR MALE XLRS		
O	XLR SOLDER	PIN 1 PIN 2 PIN 3	GND HOT NEG
P	DVI TO VGA CONVERTER FOR USE WITH DVI-A OUTPUTS ONLY.		
Q	DB-9 MALE	PIN 1 PIN 2 PIN 3 PIN 4 PIN 5 PIN 6 PIN 7 PIN 8 PIN 9	CD RXD TXD DTR GND DSR RTS CTS N/C
R	DB-9 FEMALE	PIN 1 PIN 2 PIN 3 PIN 4 PIN 5 PIN 6 PIN 7 PIN 8 PIN 9	CD TXD RXD DTR GND DSR CTS RTS N/C
S	HD15 VGA M	PIN 1 PIN 2 PIN 3 PIN 4 PIN 5 PIN 6 PIN 7 PIN 8 PIN 9 PIN 10 PIN 11 PIN 12 PIN 13 PIN 14 PIN 15	RED GREEN BLUE ID BIT N/C RED RET. GREEN RET. BLUE RET. NO PIN GROUND ID BIT ID BIT H SYNC V SYNC ID BIT
T	USE PREMADE DVI TO DVI CABLE FOR CONNECTION BETWEEN VIDEO WALL PROCESSOR AND VIDEO WALL CUBES.		
U	8 PIN MINI DIN VISCA CAMERA	PIN 1 PIN 2 PIN 3 PIN 4 PIN 5 PIN 6 PIN 7 PIN 8	DTR DSR TXD GND RXD GND IR OUT N/C
W	VGA TO BNC (X5) BREAK OUT CABLE (TYPICALY 6" - 12" IN LENGTH)		
X	CABLE MOUNT SPEAKER CONNECTOR CONDUCTOR QUANTITY VARIES PER CONNECTOR MODEL		
Z	HDMI MOLDED END CABLE. DO NOT TERMINATE IN THE FIELD, USE HDMI EXTENDER IF DISTANCE IS TO GREAT		

GENERAL NOTES:

- ALL SHIELD CONNECTIONS TO BE CONNECTED THROUGH. ONLY WHEN GROUND NOISE IS PRESENT ARE SHIELDS TO BE CUT. IF THE CUT SHIELD DOES NOT REDUCE THE NOISE IT IS TO BE REPLACED AND TROUBLESHOOTING TO CONTINUE.

ACKNOWLEDGMENTS:

BY SPECIAL PERMISSION FROM RANE CORPORATION AND EXTRON SYMBOLS AND NOTES REGARDING GENERIC AUDIO AND VIDEO CONNECTOR METHODS AND STANDARDS ARE REPRINTED AS PART OF THIS DRAWING SET AND SPECIFICATION.

BRC Acoustics & Audiovisual Design

NOT FOR CONSTRUCTION:

THIS DRAWING IS FOR REFERENCE ONLY AND IS NOT CONSIDERED A CONSTRUCTION DRAWING. CONCEPTS AND PLACEMENT OF EQUIPMENT ARE FOR THE PURPOSE OF ESTIMATING AND SPACE PLANNING.

BRIC ARCHITECTURE, INC.
1233 NW NORTHRUP STREET, SUITE 100
PORTLAND, OR 97209 T 503 595 4900

Seaside K-12 Campus
Seaside School District
1801 S. FRANKLIN STREET, SEASIDE, OREGON 97138
t: 503-738-5591

NOT FOR CONSTRUCTION

phase	BP2-PERMIT SET
date	6/15/2018
revisions	
project #	17007

CABLES AND CONNECTIONS

AV0.2

1/30/2018 4:24:40 PM
C:\BRIC Projects\17007 SSD-MSHS_christie.sterne.rvt

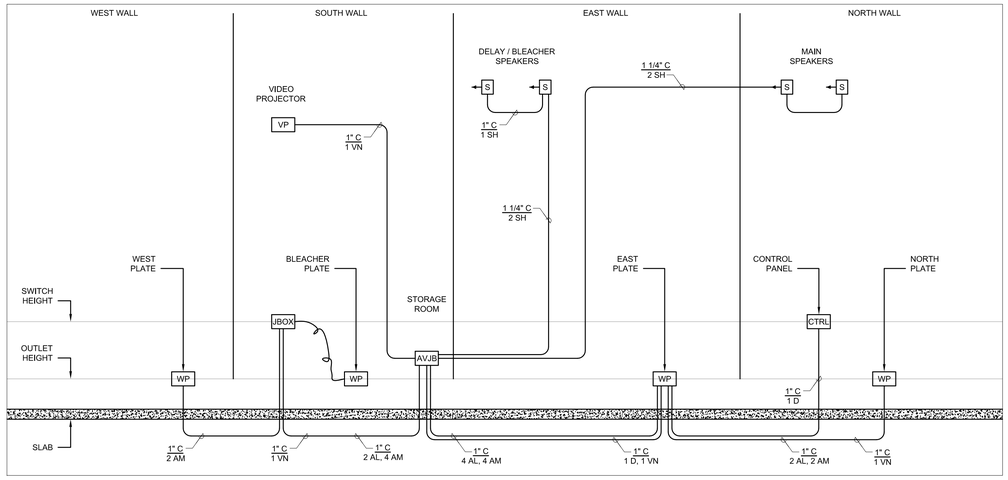

MS GYM - CONDUIT RISER AV SYSTEMS (1)

SCALE: NONE

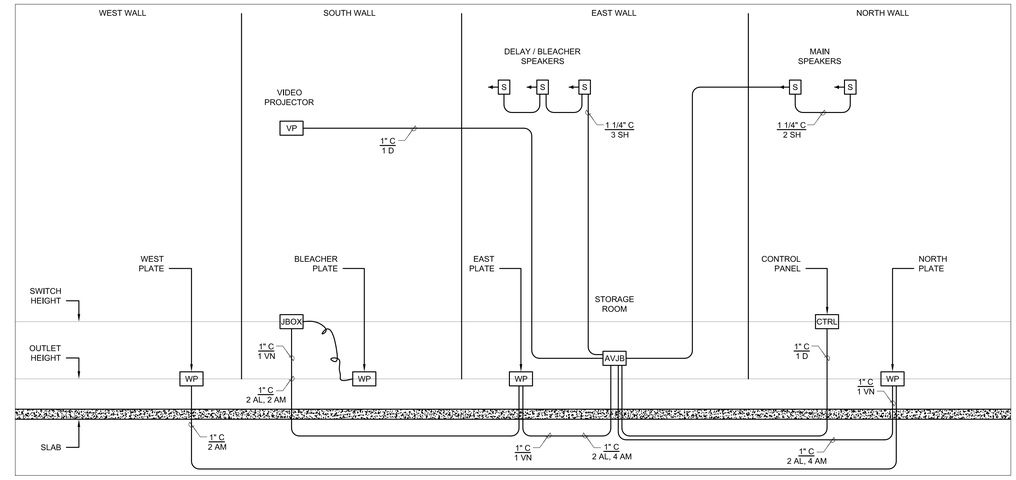

HS GYM - CONDUIT RISER AV SYSTEMS (1)

SCALE: NONE

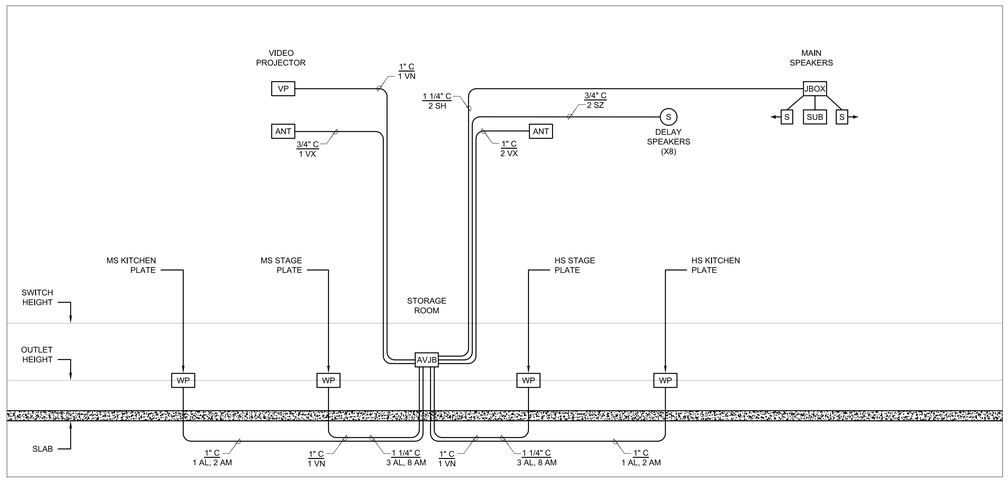

MS / HS EATING - CONDUIT RISER AV SYSTEMS (3)

SCALE: NONE

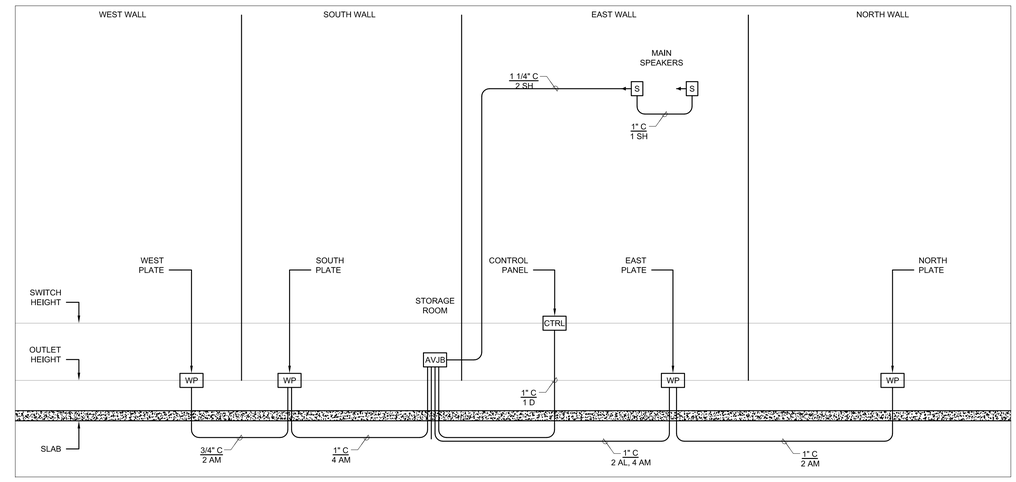

HS AUX GYM - CONDUIT RISER AV SYSTEMS (4)

SCALE: NONE

ROUGH-IN LEGEND

SYMBOL	DEVICE DESCRIPTION	ROUGH-IN	LOCATION
	PHONE / DATA LOCATION (PROVIDED BY OWNER) MAY TRIM OUT IN OTHER ROUGH IN DEVICE	PROVIDE (2 EA) RJ-45 DATA TERMINATIONS	AS SHOWN ON PLAN
ANT	WIRELESS MIC / ASSISTIVE LISTENING SYSTEM ANTENNAE	4 SQ DEEP BOX WITH SINGLE GANG RING	MOUNT AT 18' AFF OR 9' ABOVE TOP BLEACHER
AVJB	LOCAL EQUIPMENT RACK OR CREDENZA LOCATION (MOUNT AS REQUIRED FOR CASEWORK ON SITE)	ROUGH IN AS REQUIRED BY CONDUIT QUANTITY	SEE DESCRIPTION
CTRL	WALL MOUNT CONTROL PANEL	CUSTOM ROUGH IN PROVIDED BY AV CONTRACTOR	MOUNT AT 52" AFF OR AT SWITCH HEIGHT
JBOX	J-BOX FOR WIRE PULL TO FACE OF BLEACHERS	ROUGH IN AS REQUIRED BY CONDUIT QUANTITY	MOUNT AT 52" AFF OR AT SWITCH HEIGHT
J	J-BOX WITH POWER FOR PROJECTOR SCREEN CEILING BOX HOUSING (PROVIDE LOCAL SWITCH DISCONNECT)	PROVIDE 120VAC AT LEFT END OF PROJECTOR SCREEN	MOUNT AS DIRECTED ON PLAN
S	CEILING SPEAKER	-	MOUNT AS DIRECTED ON PLAN
S	GYMNASIUM PRECEDENCE SPEAKER	4 SQ DEEP BOX WITH SINGLE GANG RING	MOUNT AT 26' ABOVE GYMNASIUM FLOOR
S1	WALL SPEAKER (POWERED SPEAKER)	4 SQ DEEP BOX WITH SINGLE GANG RING	AS SHOWN ON PLANS
VP	CEILING MOUNTED VIDEO PROJECTOR (SOME PROJECTORS PROVIDED UNDER SEPARATE SECTION)	4 SQ DEEP BOX WITH TWO GANG RING	MOUNT AT CEILING NEAR VIDEO PROJECTOR
WP(X)	WALL MOUNTED AV PLATE (CONNECTIONS WILL VARY BY PLATE LOCATION	SEE DETAIL SCHEDULE SHEETS AV5.2, AV5.3	MOUNT AT 18" AFF OR OUTLET HEIGHT
	DOUBLE DUPLEX POWER OUTLET (FOR VIDEO EQUIPMENT ONLY)	PER NEC	PER NEC
	DUPLEX POWER OUTLET (FOR VIDEO EQUIPMENT ONLY)	PER NEC	PER NEC

BRC Acoustics & Audiovisual Design

NOT FOR CONSTRUCTION:

THIS DRAWING IS FOR REFERENCE ONLY AND IS NOT CONSIDERED A CONSTRUCTION DRAWING. CONCEPTS AND PLACEMENT OF EQUIPMENT ARE FOR THE PURPOSE OF ESTIMATING AND SPACE PLANNING.

1/30/2018 4:24:40 PM
C:\BRIC Projects\17007 SSD-MSHS_christie.sterne.rvt

BRIC ARCHITECTURE, INC.
1233 NW NORTHRUP STREET, SUITE 100
PORTLAND, OR 97209 T 503.595.4900

Seaside K-12 Campus

Seaside School District

1801 S. FRANKLIN STREET, SEASIDE, OREGON 97138
t: 503-738-5591

phase	BP2-PERMIT SET
date	6/15/2018
revisions	
project #	17007

CONDUIT RISER

AV1.0

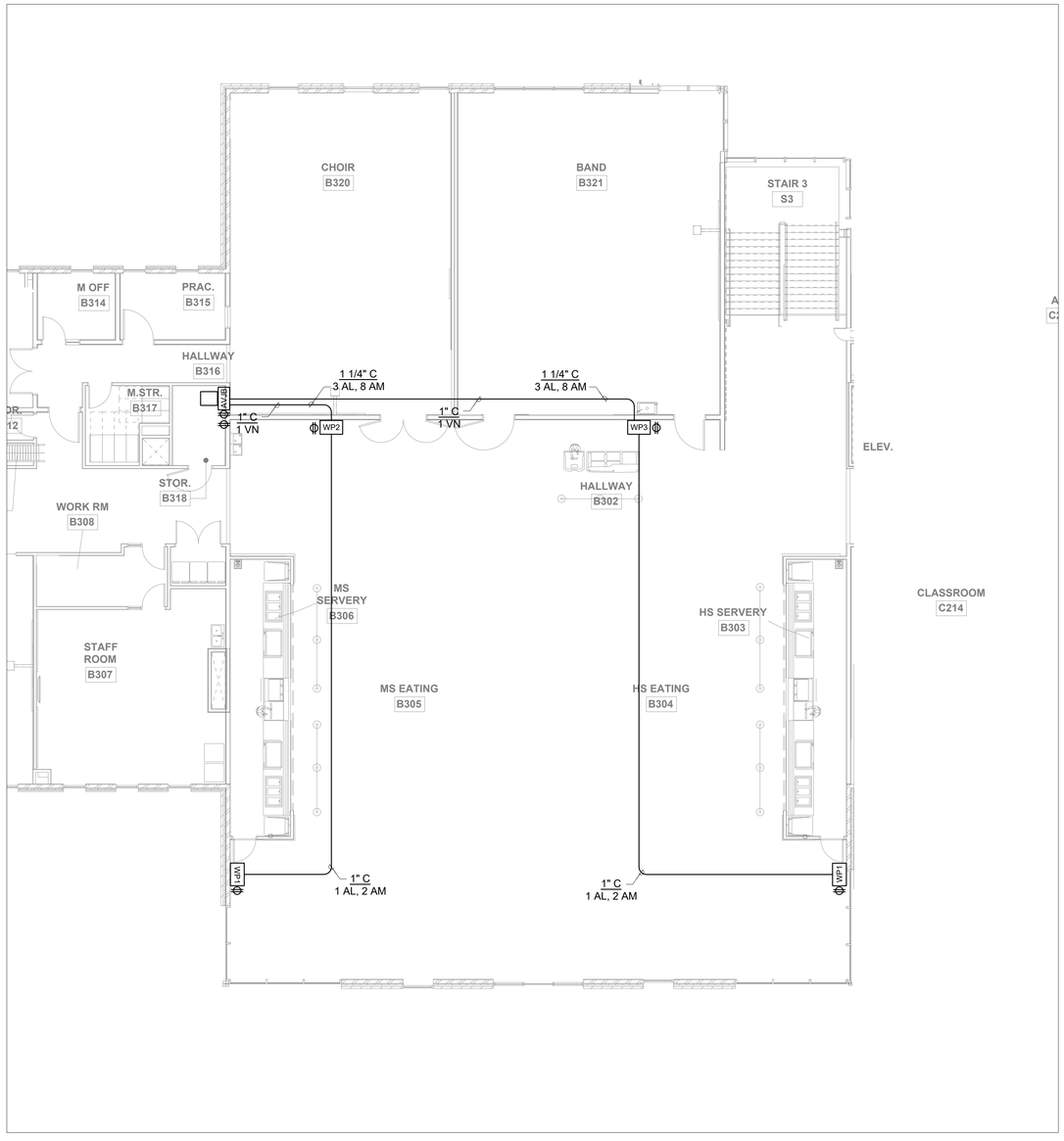

CAFE / STAGE - FLOOR AV SYSTEMS (1)

SCALE: 1/8" = 1'-0"

ROUGH-IN LEGEND

SYMBOL	DEVICE DESCRIPTION	ROUGH-IN	LOCATION
▲	PHONE / DATA LOCATION (PROVIDED BY OWNER) MAY TRIM OUT IN OTHER ROUGH IN DEVICE	PROVIDE (2 EA) RJ-45 DATA TERMINATIONS	AS SHOWN ON PLAN
ANT	WIRELESS MIC / ASSISTIVE LISTENING SYSTEM ANTENNAE	4 SQ DEEP BOX WITH SINGLE GANG RING	MOUNT AT 18' AFF OR 9' ABOVE TOP BLEACHER
AVJB	LOCAL EQUIPMENT RACK OR CREDENZA LOCATION (MOUNT AS REQUIRED FOR CASEWORK ON SITE)	ROUGH IN AS REQUIRED BY CONDUIT QUANTITY	SEE DESCRIPTION
CTRL	WALL MOUNT CONTROL PANEL	CUSTOM ROUGH IN PROVIDED BY AV CONTRACTOR	MOUNT AT 52" AFF OR AT SWITCH HEIGHT
JBOX	J-BOX FOR WIRE PULL TO FACE OF BLEACHERS	ROUGH IN AS REQUIRED BY CONDUIT QUANTITY	MOUNT AT 52" AFF OR AT SWITCH HEIGHT
(J)	J-BOX WITH POWER FOR PROJECTOR SCREEN CEILING BOX HOUSING (PROVIDE LOCAL SWITCH DISCONNECT)	PROVIDE 120VAC AT LEFT END OF PROJECTOR SCREEN	MOUNT AS DIRECTED ON PLAN
(S)	CEILING SPEAKER (PENDENT MOUNT)	4 SQ BOX WITH BLANK COVER WITH WHIP	MOUNT AT BOTTOM SIDE OF DECK
S→	GYMNASIUM PRECEDENCE SPEAKER	4 SQ DEEP BOX WITH SINGLE GANG RING	MOUNT AT 26' ABOVE GYMNASIUM FLOOR
S1→	WALL SPEAKER	4 SQ DEEP BOX WITH SINGLE GANG RING	AS SHOWN ON PLANS
VP	CEILING MOUNTED VIDEO PROJECTOR (SOME PROJECTORS PROVIDED UNDER SEPARATE SECTION)	4 SQ DEEP BOX WITH TWO GANG RING	MOUNT AT CEILING NEAR VIDEO PROJECTOR
WP(X)	WALL MOUNTED AV PLATE (CONNECTIONS WILL VARY BY PLATE LOCATION	SEE DETAIL SCHEDULE SHEETS AV5.2, AV5.3	MOUNT AT 18" AFF OR OUTLET HEIGHT
	DOUBLE DUPLEX POWER OUTLET (FOR VIDEO EQUIPMENT ONLY)	PER NEC	PER NEC
	DUPLEX POWER OUTLET (FOR VIDEO EQUIPMENT ONLY)	PER NEC	PER NEC

WIRE TYPE DESCRIPTION

WIRE LEGEND

TYPE	QTY	DESCRIPTION	MANUFACTURER	NON PLENUM	PLENUM	CONDUCTORS
AD	X	AUDIO (DIGITAL MIC)	POLYCOM	CUSTOM	CUSTOM	SEE CABLE
AL	X	AUDIO (LINE)	BELDEN	9451	9451P	1 PR W/SHLD
AM	X	AUDIO (MICROPHONE)	BELDEN	9451	9451P	1 PR W/SHLD
AN	X	AUDIO (NETWORK OVER CAT CABLE)	GEPCO	-	2131611E	4 PR CAT CABLE W/SHLD
AP	X	MULTIPAIR AUDIO	BELDEN	1817R	1817R	8 PR W/SHLD
CAT	X	DIGITAL MEDIA CAT CABLE	CRESTRON	DM-CBL-NP-SP500	DM-CBL-P-SP500	(M) 4 PR CAT5E / (D) 4 PR SPECIAL (DM/net) 1PR 18GA PWR/1 PR DATA
CG	X	CONTROL (GENERAL)	BELDEN	9751	82743	6 PR 20-22 GA
CN	X	DATA	BELDEN	1583A	1583A	4 PR CAT 5
CP	X	CONTROL (NETWORK)	CRESTRON	CRESNET	CRESNET-P	1 PR 18GA TWISTED (UNSHLD) 1 PR 22GA TWISTED (SHLD)
CQ	X	QUICK MEDIA SIAMESE CABLE	CRESTRON	CRESCAT-QM-NP	CRESCAT-QM-P	4 PR CATEGORY CABLE 1 PR 18GA PWR / 1 PR 22GA DATA
CR	X	CONTROL (IR)	BELDEN	9451	9451P	1 PR W/SHLD
CS	X	CONTROL (SERIAL)	BELDEN	9451	9451P	1 PR W/SHLD
D	X	DATA	BELDEN	1583A	1583A	4 PR CAT 5
DM	X	DIGITAL MEDIA 8G STP CABLE	CRESTRON	DM-CBL-8G-NP-SP500	DM-CBL-8G-P-SP500	(SPECIAL) 4 PR CAT (X) SHLD
DVI	X	DVI MOLDED CABLE	VARIES	-	-	DVI - DVI
EXT(X)	X	EXTRON MOLDED CABLE	EXTRON	(X) DENOTE NUMBER		VARIOUS
IM	X	PRODUCTION INTERCOM	WEST PENN	D-510	D-510	2 PR W/SHLD
HDMI	X	HDMI MOLDED CABLE	VARIES	-	-	HDMI - HDMI
LNK(X)	X	MANUFACTURER LINK CABLE	VARIES	1583A	1583A	4 PR CAT 5
P	X	LOW VOLTAGE POWER	BELDEN	8461	8461	18/2
R	X	RGBHV	LIBERTY	RGB5C	RGB5C-PLN	MINI HI RES
SL	X	SPEAKER (8 OHM) LONG	WEST PENN	C-210	C-210	10/2
SH	X	SPEAKER (8 OHM) SHORT	BELDEN	5100UE	6100UE	12/2
SZ	X	SPEAKER (70 VOLT)	BELDEN	5300UE	6300UE	18/2
T	X	TELEPHONE/DATA	BELDEN	1583A	1583A	4 PR CAT 5
VS	X	COMPOSITE VIDEO (SHORT)	BELDEN	1505A	1506A	RG-59/U
VL	X	COMPOSITE VIDEO (LONG)	BELDEN	1694A	1695A	RG-6/U
VN	X	VIDEO NETWORK	GEPCO	-	10GX52F	4 PR CAT 6A W/ SHIELD
VDO(X)	X	VIDEO ADAPTER	VARIOUS	(X) DENOTE NUMBER		VARIOUS
Y	X	S-VIDEO (Y/C)	BELDEN	QTY (2) 1505A	QTY (2) 1506A	(2) RG-59/U

ON SHEET NOTES:

(1) NOT USED.

(2) NOT USED.

(3) NOT USED.

BRC | Acoustics & Audiovisual Design

NOT FOR CONSTRUCTION:

THIS DRAWING IS FOR REFERENCE ONLY AND IS NOT CONSIDERED A CONSTRUCTION DRAWING. CONCEPTS AND PLACEMENT OF EQUIPMENT ARE FOR THE PURPOSE OF ESTIMATING AND SPACE PLANNING.

BR|IC ARCHITECTURE, INC.
1233 NW NORTHRUP STREET, SUITE 100
PORTLAND, OR 97209 T 503 595 4900

Seaside K-12 Campus
Seaside School District
1801 S. FRANKLIN STREET, SEASIDE, OREGON 97138
t: 503-738-5591

NOT FOR CONSTRUCTION

phase	BP2-PERMIT SET
date	6/15/2018
revisions	
project #	17007

CAFE / STAGE
AV SYSTEMS
FLOOR PLAN

AV1.1

1/30/2018 4:24:40 PM
C:\BRIC Projects\17007 SSD-MSHS_christie.sterne.rvt

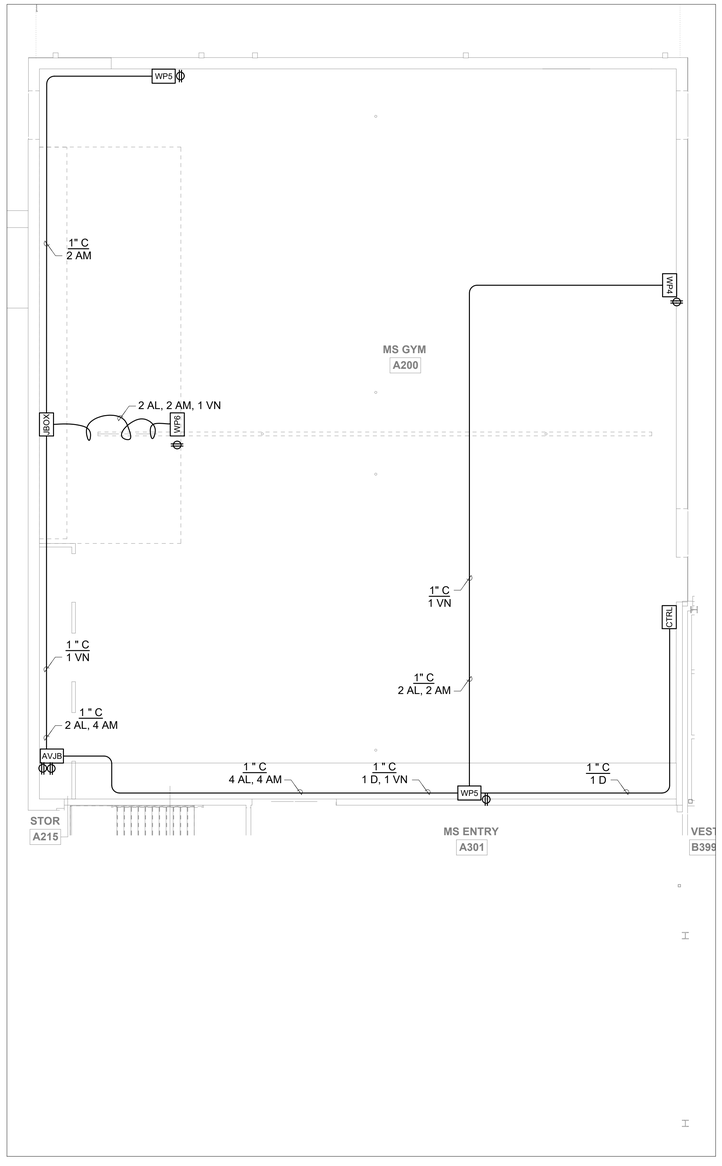

MS MAIN GYM (1)

SCALE: 1/8" = 1'-0"

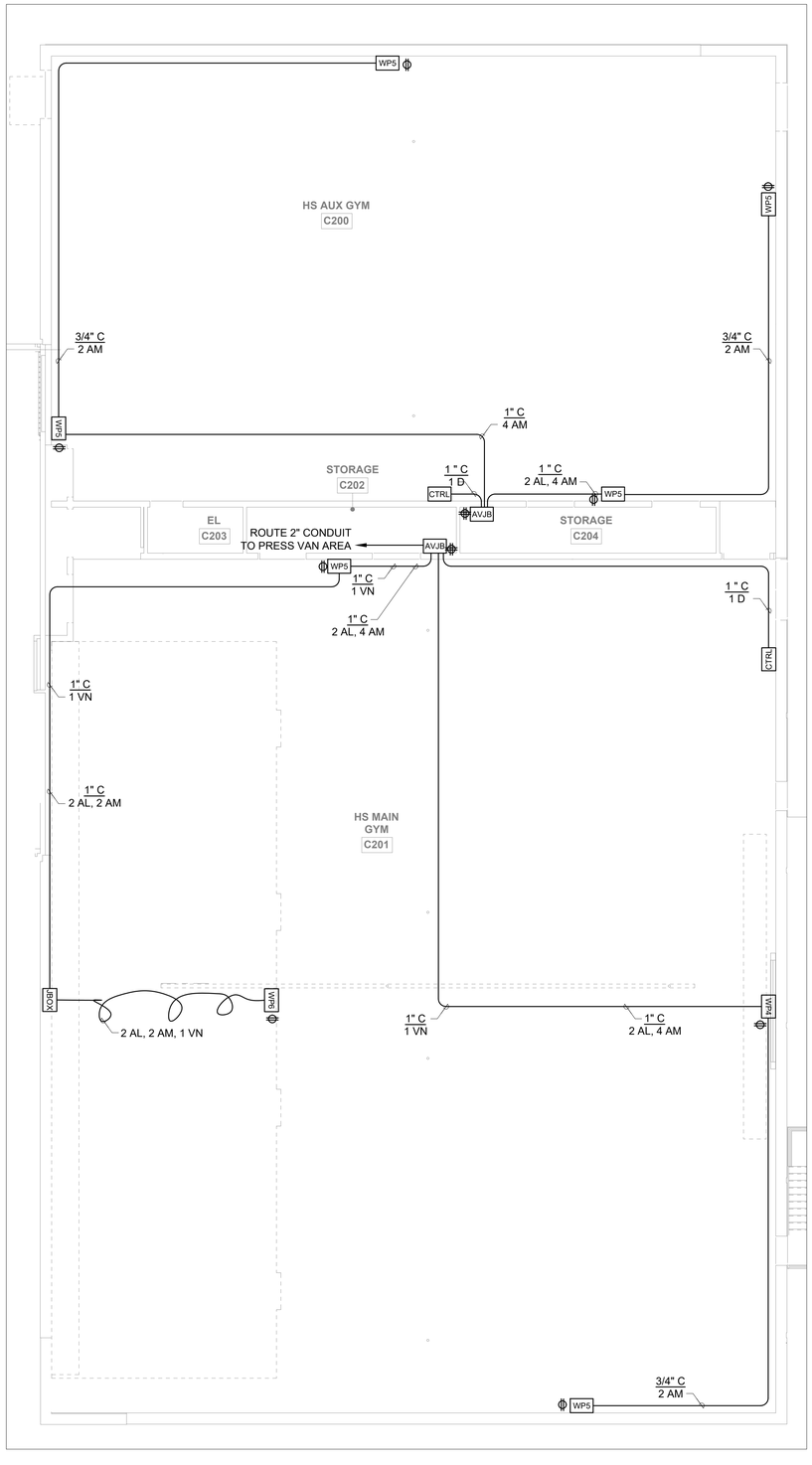

HS MAIN & AUX GYM AV SYSTEMS (2)

SCALE: 1/8" = 1'-0"

ROUGH-IN LEGEND

SYMBOL	DEVICE DESCRIPTION	ROUGH-IN	LOCATION
▲	PHONE / DATA LOCATION (PROVIDED BY OWNER) MAY TRIM OUT IN OTHER ROUGH IN DEVICE	PROVIDE (2 EA) RJ-45 DATA TERMINATIONS	AS SHOWN ON PLAN
ANT	WIRELESS MIC / ASSISTIVE LISTENING SYSTEM ANTENNAE	4 SQ DEEP BOX WITH SINGLE GANG RING	MOUNT AT 18' AFF OR 9' ABOVE TOP BLEACHER
AVJB	LOCAL EQUIPMENT RACK OR CREDENZA LOCATION (MOUNT AS REQUIRED FOR CASEWORK ON SITE)	ROUGH IN AS REQUIRED BY CONDUIT QUANTITY	SEE DESCRIPTION
CTRL	WALL MOUNT CONTROL PANEL	CUSTOM ROUGH IN PROVIDED BY AV CONTRACTOR	MOUNT AT 52" AFF OR AT SWITCH HEIGHT
JBOX	J-BOX FOR WIRE PULL TO FACE OF BLEACHERS	ROUGH IN AS REQUIRED BY CONDUIT QUANTITY	MOUNT AT 52" AFF OR AT SWITCH HEIGHT
(J)	J-BOX WITH POWER FOR PROJECTOR SCREEN CEILING BOX HOUSING (PROVIDE LOCAL SWITCH DISCONNECT)	PROVIDE 120VAC AT LEFT END OF PROJECTOR SCREEN	MOUNT AS DIRECTED ON PLAN
(S)	CEILING SPEAKER (PENDENT MOUNT)	4 SQ BOX WITH BLANK COVER WITH WHIP	MOUNT AT BOTTOM SIDE OF DECK
S→	GYMNASIUM PRECEDENCE SPEAKER	4 SQ DEEP BOX WITH SINGLE GANG RING	MOUNT AT 26' ABOVE GYMNASIUM FLOOR
ST→	WALL SPEAKER	4 SQ DEEP BOX WITH SINGLE GANG RING	AS SHOWN ON PLANS
VP	CEILING MOUNTED VIDEO PROJECTOR (SOME PROJECTORS PROVIDED UNDER SEPARATE SECTION)	4 SQ DEEP BOX WITH TWO GANG RING	MOUNT AT CEILING NEAR VIDEO PROJECTOR
WP(X)	WALL MOUNTED AV PLATE (CONNECTIONS WILL VARY BY PLATE LOCATION	SEE DETAIL SCHEDULE SHEETS AV5.2, AV5.3	MOUNT AT 18" AFF OR OUTLET HEIGHT
⊕	DOUBLE DUPLEX POWER OUTLET (FOR VIDEO EQUIPMENT ONLY)	PER NEC	PER NEC
⊕	DUPLEX POWER OUTLET (FOR VIDEO EQUIPMENT ONLY)	PER NEC	PER NEC

WIRE TYPE DESCRIPTION

WIRE LEGEND

TYPE	QTY	DESCRIPTION	MANUFACTURER	NON PLENUM	PLENUM	CONDUCTORS
AD	X	AUDIO (DIGITAL MIC)	POLYCOM	CUSTOM	CUSTOM	SEE CABLE
AL	X	AUDIO (LINE)	BELDEN	9451	9451P	1 PR W/SHLD
AM	X	AUDIO (MICROPHONE)	BELDEN	9451	9451P	1 PR W/SHLD
AN	X	AUDIO (NETWORK OVER CAT CABLE)	GEPCO	-	213161E	4 PR CAT CABLE W/SHLD
AP	X	MULTIPAIR AUDIO	BELDEN	1817R	1817R	8 PR W/SHLD
CAT	X	DIGITAL MEDIA CAT CABLE	CRESTRON	DM-CBL-NP-SP500	DM-CBL-P-SP500	(M) 4 PR CAT5E / (S) 4 PR SPECIAL (DM/net) 1PR 18GA PWR/1 PR DATA
CG	X	CONTROL (GENERAL)	BELDEN	9751	82743	6 PR 20-22 GA
CN	X	DATA	BELDEN	1583A	1583A	4 PR CAT 5
CP	X	CONTROL (NETWORK)	CRESTRON	CRESNET	CRESNET-P	1 PR 18GA TWISTED (UNSHLD) - 1 PR 22GA TWISTED (SHLD)
CQ	X	QUICK MEDIA SIAMESE CABLE	CRESTRON	CRESCAT-QM-NP	CRESCAT-QM-P	4 PR CATEGORY CABLE 1 PR 18GA PWR / 1 PR 22GA DATA
CR	X	CONTROL (IR)	BELDEN	9451	9451P	1 PR W/SHLD
CS	X	CONTROL (SERIAL)	BELDEN	9451	9451P	1 PR W/SHLD
D	X	DATA	BELDEN	1583A	1583A	4 PR CAT 5
DM	X	DIGITAL MEDIA 8G STP CABLE	CRESTRON	DM-CBL-8G-NP-SP500	DM-CBL-8G-P-SP500	(SPECIAL) 4 PR CAT (X) SHLD
DVI	X	DVI MOLDED CABLE	VARIES	-	-	DVI - DVI
EXT(X)	X	EXTRON MOLDED CABLE	EXTRON	(X) DENOTE NUMBER		VARIOUS
IM	X	PRODUCTION INTERCOM	WEST PENN	D-510	D-510	2 PR W/SHLD
HDMI	X	HDMI MOLDED CABLE	VARIES	-	-	HDMI - HDMI
LNK(X)	X	MANUFACTURER LINK CABLE	VARIES	1583A	1583A	4 PR CAT 5
P	X	LOW VOLTAGE POWER	BELDEN	8461	8461	18/2
R	X	RGBHV	LIBERTY	RGB5C	RGB5C-PLN	MINI HI RES
SL	X	SPEAKER (8 OHM) LONG	WEST PENN	C-210	C-210	10/2
SH	X	SPEAKER (8 OHM) SHORT	BELDEN	5100UE	6100UE	12/2
SZ	X	SPEAKER (70 VOLT)	BELDEN	5300UE	6300UE	18/2
T	X	TELEPHONE/DATA	BELDEN	1583A	1583A	4 PR CAT 5
VS	X	COMPOSITE VIDEO (SHORT)	BELDEN	1505A	1506A	RG-59/U
VL	X	COMPOSITE VIDEO (LONG)	BELDEN	1694A	1695A	RG-6/U
VN	X	VIDEO NETWORK	GEPCO	-	10GX52F	4 PR CAT 6A W/ SHIELD
VDO(X)	X	VIDEO ADAPTER	VARIOUS	(X) DENOTE NUMBER		VARIOUS
Y	X	S-VIDEO (Y/C)	BELDEN	QTY (2) 1505A	QTY (2) 1506A	(2) RG-59/U

ON SHEET NOTES:

1. NOT USED.
2. NOT USED.
3. NOT USED.

BRC Acoustics & Audiovisual Design

NOT FOR CONSTRUCTION:

THIS DRAWING IS FOR REFERENCE ONLY AND IS NOT CONSIDERED A CONSTRUCTION DRAWING. CONCEPTS AND PLACEMENT OF EQUIPMENT ARE FOR THE PURPOSE OF ESTIMATING AND SPACE PLANNING.

1/30/2018 4:24:40 PM
C:\BRIC Projects\17007 SSD-MS\HS_christie.sterne.rvt

BRIC ARCHITECTURE, INC.
1233 NW NORTHRUP STREET, SUITE 100
PORTLAND, OR 97209 T 503 595 4900

Seaside K-12 Campus

Seaside School District
1801 S. FRANKLIN STREET, SEASIDE, OREGON 97138
t: 503-738-5591

NOT FOR CONSTRUCTION

phase	BP2-PERMIT SET
date	6/15/2018
revisions	
project #	17007

MS / HS GYM
AV SYSTEMS
FLOOR PLAN

AV1.2

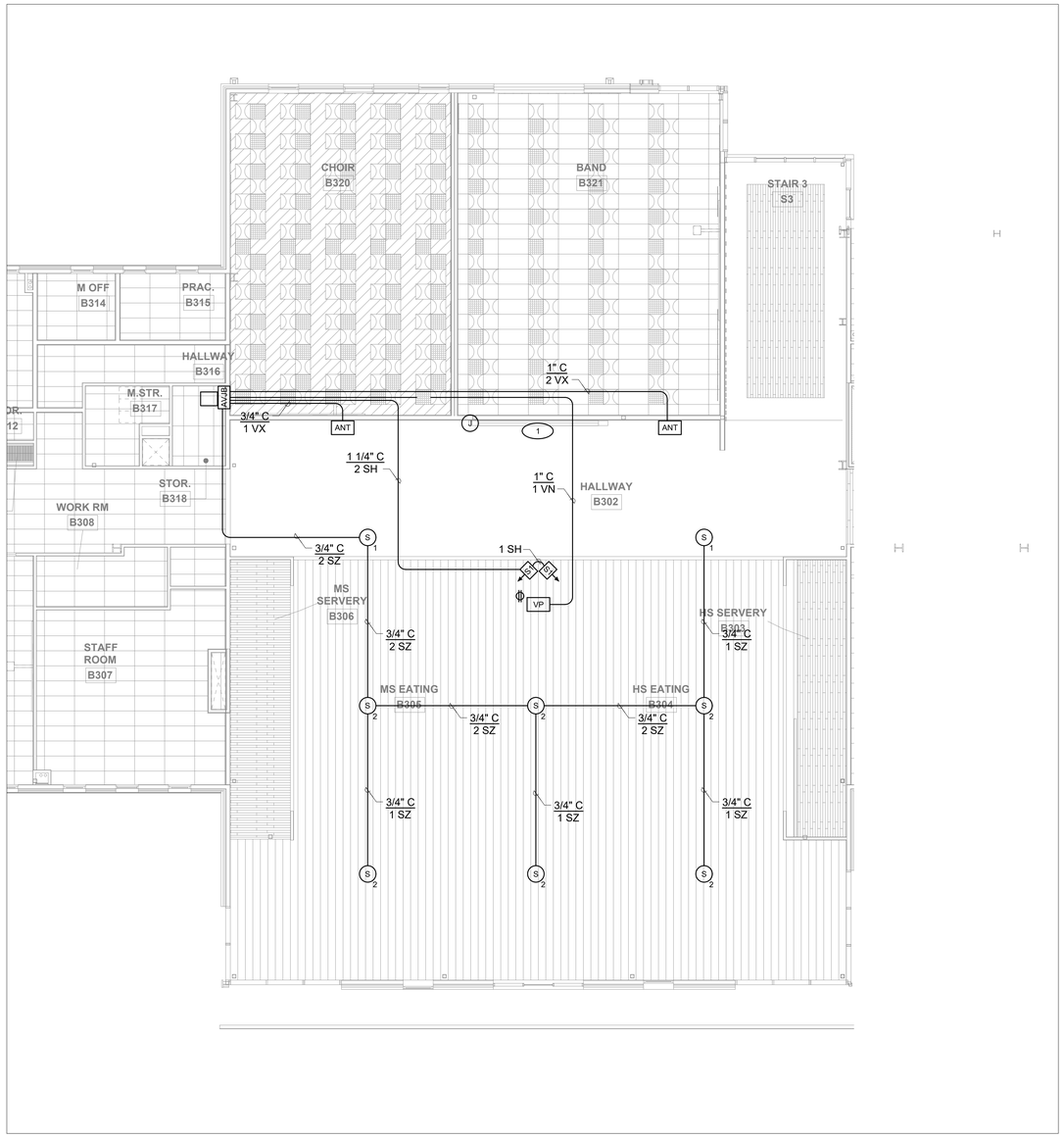

CAFE / STAGE - CEILING AV SYSTEMS (1)

SCALE: 1/8" = 1'-0"

ROUGH-IN LEGEND

SYMBOL	DEVICE DESCRIPTION	ROUGH-IN	LOCATION
▲	PHONE / DATA LOCATION (PROVIDED BY OWNER) MAY TRIM OUT IN OTHER ROUGH IN DEVICE	PROVIDE (2 EA) RJ-45 DATA TERMINATIONS	AS SHOWN ON PLAN
ANT	WIRELESS MIC / ASSISTIVE LISTENING SYSTEM ANTENNAE	4 SQ DEEP BOX WITH SINGLE GANG RING	MOUNT AT 18' AFF OR 9' ABOVE TOP BLEACHER
AVJB	LOCAL EQUIPMENT RACK OR CREDENZA LOCATION (MOUNT AS REQUIRED FOR CASEWORK ON SITE)	ROUGH IN AS REQUIRED BY CONDUIT QUANTITY	SEE DESCRIPTION
CTRL	WALL MOUNT CONTROL PANEL	CUSTOM ROUGH IN PROVIDED BY AV CONTRACTOR	MOUNT AT 52" AFF OR AT SWITCH HEIGHT
JBOX	J-BOX FOR WIRE PULL TO FACE OF BLEACHERS	ROUGH IN AS REQUIRED BY CONDUIT QUANTITY	MOUNT AT 52" AFF OR AT SWITCH HEIGHT
J	J-BOX WITH POWER FOR PROJECTOR SCREEN CEILING BOX HOUSING (PROVIDE LOCAL SWITCH DISCONNECT)	PROVIDE 120VAC AT LEFT END OF PROJECTOR SCREEN	MOUNT AS DIRECTED ON PLAN
S	CEILING SPEAKER (PENDENT MOUNT)	4 SQ BOX WITH BLANK COVER WITH WHIP	MOUNT AT BOTTOM SIDE OF DECK
S	GYMNASIUM PRECEDENCE SPEAKER	4 SQ DEEP BOX WITH SINGLE GANG RING	MOUNT AT 26' ABOVE GYMNASIUM FLOOR
S1	WALL SPEAKER	4 SQ DEEP BOX WITH SINGLE GANG RING	AS SHOWN ON PLANS
VP	CEILING MOUNTED VIDEO PROJECTOR (SOME PROJECTORS PROVIDED UNDER SEPARATE SECTION)	4 SQ DEEP BOX WITH TWO GANG RING	MOUNT AT CEILING NEAR VIDEO PROJECTOR
WP(X)	WALL MOUNTED AV PLATE (CONNECTIONS WILL VARY BY PLATE LOCATION	SEE DETAIL SCHEDULE SHEETS AV5.2, AV5.3	MOUNT AT 18" AFF OR OUTLET HEIGHT
	DOUBLE DUPLEX POWER OUTLET (FOR VIDEO EQUIPMENT ONLY)	PER NEC	PER NEC
	DUPLEX POWER OUTLET (FOR VIDEO EQUIPMENT ONLY)	PER NEC	PER NEC

WIRE TYPE DESCRIPTION

WIRE LEGEND

TYPE	QTY	DESCRIPTION	MANUFACTURER	NON PLENUM	PLENUM	CONDUCTORS
AD	X	AUDIO (DIGITAL MIC)	POLYCOM	CUSTOM	CUSTOM	SEE CABLE
AL	X	AUDIO (LINE)	BELDEN	9451	9451P	1 PR W/SHLD
AM	X	AUDIO (MICROPHONE)	BELDEN	9451	9451P	1 PR W/SHLD
AN	X	AUDIO (NETWORK OVER CAT CABLE)	GEPCO	-	2131611E	4 PR CAT CABLE W/SHLD
AP	X	MULTIPAIR AUDIO	BELDEN	1817R	1817R	8 PR W/SHLD
CAT	X	DIGITAL MEDIA CAT CABLE	CRESTRON	DM-CBL-NP-SP500	DM-CBL-P-SP500	(M) 4 PR CAT5E / (D) 4 PR SPECIAL (DM/net) 1PR 18GA PWR/1 PR DATA
CG	X	CONTROL (GENERAL)	BELDEN	9751	82743	6 PR 20-22 GA
CN	X	DATA	BELDEN	1583A	1583A	4 PR CAT 5
CP	X	CONTROL (NETWORK)	CRESTRON	CRESNET	CRESNET-P	1 PR 18GA TWISTED (UNSHLD) 1 PR 22GA TWISTED (SHLD)
CQ	X	QUICK MEDIA SIAMESE CABLE	CRESTRON	CRESCAT-QM-NP	CRESCAT-QM-P	4 PR CATEGORY CABLE 1 PR 18GA PWR / 1 PR 22GA DATA
CR	X	CONTROL (IR)	BELDEN	9451	9451P	1 PR W/SHLD
CS	X	CONTROL (SERIAL)	BELDEN	9451	9451P	1 PR W/SHLD
D	X	DATA	BELDEN	1583A	1583A	4 PR CAT 5
DM	X	DIGITAL MEDIA 8G STP CABLE	CRESTRON	DM-CBL-8G-NP-SP500	DM-CBL-8G-P-SP500	(SPECIAL) 4 PR CAT (X) SHLD
DVI	X	DVI MOLDED CABLE	VARIES	-	-	DVI - DVI
EXT(X)	X	EXTRON MOLDED CABLE	EXTRON	(X) DENOTE NUMBER		VARIOUS
IM	X	PRODUCTION INTERCOM	WEST PENN	D-510	D-510	2 PR W/SHLD
HDMI	X	HDMI MOLDED CABLE	VARIES	-	-	HDMI - HDMI
LNK(X)	X	MANUFACTURER LINK CABLE	VARIES	1583A	1583A	4 PR CAT 5
P	X	LOW VOLTAGE POWER	BELDEN	8461	8461	18/2
R	X	RGBHV	LIBERTY	RGB5C	RGB5C-PLN	MINI HI RES
SL	X	SPEAKER (8 OHM) LONG	WEST PENN	C-210	C-210	10/2
SH	X	SPEAKER (8 OHM) SHORT	BELDEN	5100UE	6100UE	12/2
SZ	X	SPEAKER (70 VOLT)	BELDEN	5300UE	6300UE	18/2
T	X	TELEPHONE/DATA	BELDEN	1583A	1583A	4 PR CAT 5
VS	X	COMPOSITE VIDEO (SHORT)	BELDEN	1505A	1506A	RG-59/U
VL	X	COMPOSITE VIDEO (LONG)	BELDEN	1694A	1695A	RG-6/U
VN	X	VIDEO NETWORK	GEPCO	-	10GX52F	4 PR CAT 6A W/ SHIELD
VDO(X)	X	VIDEO ADAPTER	VARIOUS	(X) DENOTE NUMBER		VARIOUS
Y	X	S-VIDEO (Y/C)	BELDEN	QTY (2) 1505A	QTY (2) 1506A	(2) RG-59/U

ON SHEET NOTES:

1. PROJECTION SCREENS IN DIVISION 11.
2. NOT USED.
3. NOT USED.

BRC | Acoustics & Audiovisual Design

NOT FOR CONSTRUCTION:

THIS DRAWING IS FOR REFERENCE ONLY AND IS NOT CONSIDERED A CONSTRUCTION DRAWING. CONCEPTS AND PLACEMENT OF EQUIPMENT ARE FOR THE PURPOSE OF ESTIMATING AND SPACE PLANNING.

1/30/2018 4:24:40 PM
C:\BRIC Projects\17007 SSD-MSHS_christie.sterne.rvt

BRIC ARCHITECTURE, INC.
1233 NW NORTHRUP STREET, SUITE 100
PORTLAND, OR 97209 T 503 595 4900

Seaside K-12 Campus
Seaside School District
1801 S. FRANKLIN STREET, SEASIDE, OREGON 97138
t: 503-738-5591

NOT FOR CONSTRUCTION

phase	BP2-PERMIT SET
date	6/15/2018
revisions	
project #	17007

CAFE/ STAGE
AV SYSTEMS
CEILING PLAN

AV2.1

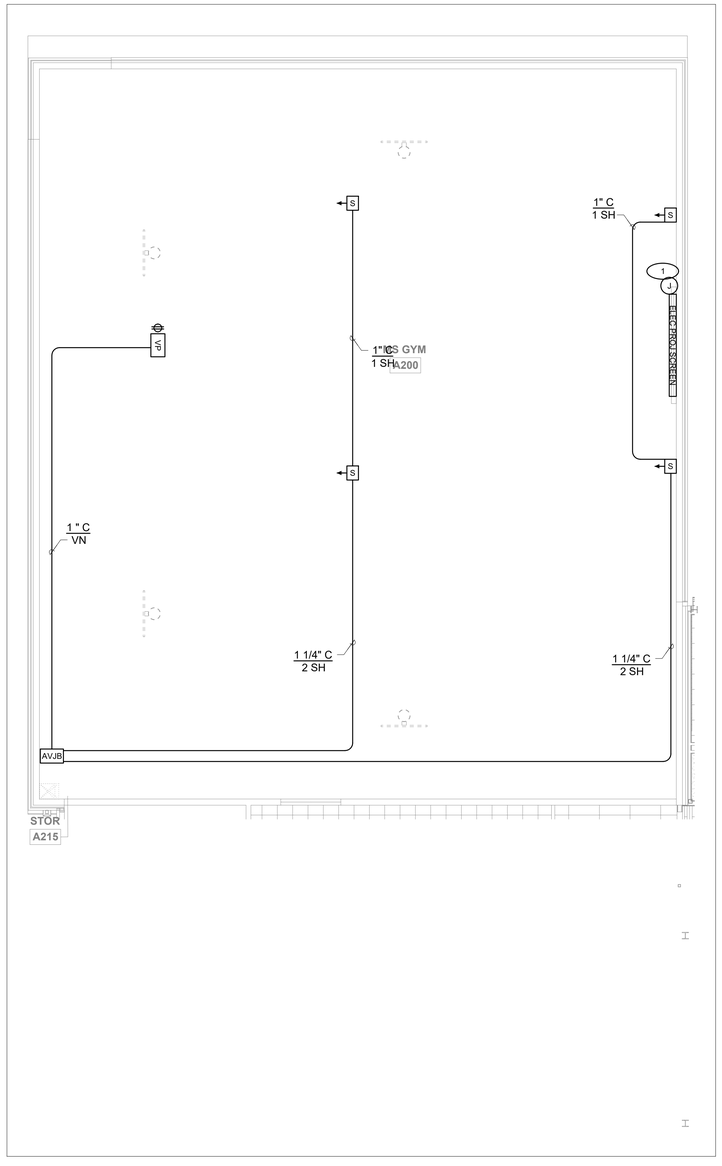

MS MAIN GYM CEILING AV SYSTEMS (1)

SCALE: 1/8" = 1'-0"

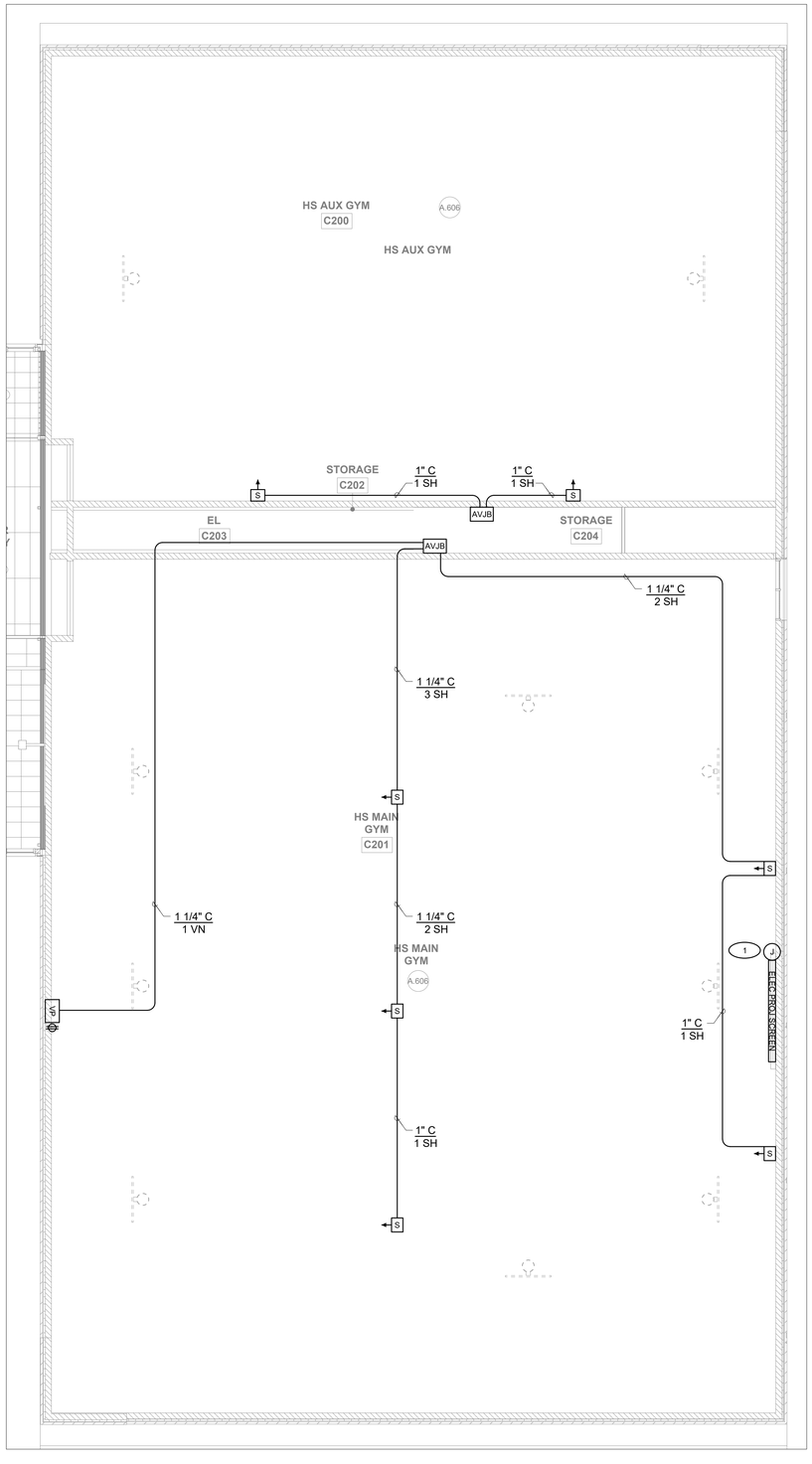

HS MAIN & AUX GYM CEILING AV SYSTEMS (2)

SCALE: 1/8" = 1'-0"

ROUGH-IN LEGEND

SYMBOL	DEVICE DESCRIPTION	ROUGH-IN	LOCATION
▲	PHONE / DATA LOCATION (PROVIDED BY OWNER) MAY TRIM OUT IN OTHER ROUGH IN DEVICE	PROVIDE (2 EA) RJ-45 DATA TERMINATIONS	AS SHOWN ON PLAN
ANT	WIRELESS MIC / ASSISTIVE LISTENING SYSTEM ANTENNAE	4 SQ DEEP BOX WITH SINGLE GANG RING	MOUNT AT 18' AFF OR 9' ABOVE TOP BLEACHER
AVJB	LOCAL EQUIPMENT RACK OR CREDENZA LOCATION (MOUNT AS REQUIRED FOR CASEWORK ON SITE)	ROUGH IN AS REQUIRED BY CONDUIT QUANTITY	SEE DESCRIPTION
CTRL	WALL MOUNT CONTROL PANEL	CUSTOM ROUGH IN PROVIDED BY AV CONTRACTOR	MOUNT AT 52" AFF OR AT SWITCH HEIGHT
JBOX	J-BOX FOR WIRE PULL TO FACE OF BLEACHERS	ROUGH IN AS REQUIRED BY CONDUIT QUANTITY	MOUNT AT 52" AFF OR AT SWITCH HEIGHT
J	J-BOX WITH POWER FOR PROJECTOR SCREEN CEILING BOX HOUSING (PROVIDE LOCAL SWITCH DISCONNECT)	PROVIDE 120VAC AT LEFT END OF PROJECTOR SCREEN	MOUNT AS DIRECTED ON PLAN
S	CEILING SPEAKER (PENDENT MOUNT)	4 SQ BOX WITH BLANK COVER WITH WHIP	MOUNT AT BOTTOM SIDE OF DECK
S→	GYMNASIUM PRECEDENCE SPEAKER	4 SQ DEEP BOX WITH SINGLE GANG RING	MOUNT AT 26' ABOVE GYMNASIUM FLOOR
S1→	WALL SPEAKER	4 SQ DEEP BOX WITH SINGLE GANG RING	AS SHOWN ON PLANS
VP	CEILING MOUNTED VIDEO PROJECTOR (SOME PROJECTORS PROVIDED UNDER SEPARATE SECTION)	4 SQ DEEP BOX WITH TWO GANG RING	MOUNT AT CEILING NEAR VIDEO PROJECTOR
WP(X)	WALL MOUNTED AV PLATE (CONNECTIONS WILL VARY BY PLATE LOCATION	SEE DETAIL SCHEDULE SHEETS AV5.2, AV5.3	MOUNT AT 18" AFF OR OUTLET HEIGHT
⌖	DOUBLE DUPLEX POWER OUTLET (FOR VIDEO EQUIPMENT ONLY)	PER NEC	PER NEC
⌖	DUPLEX POWER OUTLET (FOR VIDEO EQUIPMENT ONLY)	PER NEC	PER NEC

WIRE TYPE DESCRIPTION

WIRE LEGEND

TYPE	QTY	DESCRIPTION	MANUFACTURER	NON PLENUM	PLENUM	CONDUCTORS
AD	X	AUDIO (DIGITAL MIC)	POLYCOM	CUSTOM	CUSTOM	SEE CABLE
AL	X	AUDIO (LINE)	BELDEN	9451	9451P	1 PR W/SHLD
AM	X	AUDIO (MICROPHONE)	BELDEN	9451	9451P	1 PR W/SHLD
AN	X	AUDIO (NETWORK OVER CAT CABLE)	GEPCO	-	213161IE	4 PR CAT CABLE W/SHLD
AP	X	MULTIPAIR AUDIO	BELDEN	1817R	1817R	8 PR W/SHLD
CAT	X	DIGITAL MEDIA CAT CABLE	CRESTRON	DM-CBL-NP-SP500	DM-CBL-P-SP500	(M) 4 PR CAT5E / (S) 4 PR SPECIAL (DM/net) 1PR 18GA PWR/ 1 PR DATA
CG	X	CONTROL (GENERAL)	BELDEN	9751	82743	6 PR 20-22 GA
CN	X	DATA	BELDEN	1583A	1583A	4 PR CAT 5
CP	X	CONTROL (NETWORK)	CRESTRON	CRESNET	CRESNET-P	1 PR 18GA TWISTED (UNSHLD) 1 PR 22GA TWISTED (SHLD)
CQ	X	QUICK MEDIA SIAMESE CABLE	CRESTRON	CRESCAT-QM-NP	CRESCAT-QM-P	4 PR CATEGORY CABLE 1 PR 18GA PWR / 1 PR 22GA DATA
CR	X	CONTROL (IR)	BELDEN	9451	9451P	1 PR W/SHLD
CS	X	CONTROL (SERIAL)	BELDEN	9451	9451P	1 PR W/SHLD
D	X	DATA	BELDEN	1583A	1583A	4 PR CAT 5
DM	X	DIGITAL MEDIA 8G STP CABLE	CRESTRON	DM-CBL-8G-NP-SP500	DM-CBL-8G-P-SP500	(SPECIAL) 4 PR CAT (X) SHLD
DVI	X	DVI MOLDED CABLE	VARIES	-	-	DVI - DVI
EXT(X)	X	EXTRON MOLDED CABLE	EXTRON	(X) DENOTE NUMBER		VARIOUS
IM	X	PRODUCTION INTERCOM	WEST PENN	D-510	D-510	2 PR W/SHLD
HDMI	X	HDMI MOLDED CABLE	VARIES	-	-	HDMI - HDMI
LNK(X)	X	MANUFACTURER LINK CABLE	VARIES	1583A	1583A	4 PR CAT 5
P	X	LOW VOLTAGE POWER	BELDEN	8461	8461	18/2
R	X	RGBHV	LIBERTY	RGB5C	RGB5C-PLN	MINI HI RES
SL	X	SPEAKER (8 OHM) LONG	WEST PENN	C-210	C-210	10/2
SH	X	SPEAKER (8 OHM) SHORT	BELDEN	5100UE	6100UE	12/2
SZ	X	SPEAKER (70 VOLT)	BELDEN	5300UE	6300UE	18/2
T	X	TELEPHONE/DATA	BELDEN	1583A	1583A	4 PR CAT 5
VS	X	COMPOSITE VIDEO (SHORT)	BELDEN	1505A	1506A	RG-59/U
VL	X	COMPOSITE VIDEO (LONG)	BELDEN	1694A	1695A	RG-6/U
VN	X	VIDEO NETWORK	GEPCO	-	10GX52F	4 PR CAT 6A W/ SHIELD
VDO(X)	X	VIDEO ADAPTER	VARIOUS	(X) DENOTE NUMBER		VARIOUS
Y	X	S-VIDEO (Y/C)	BELDEN	QTY (2) 1505A	QTY (2) 1506A	(2) RG-59/U

ON SHEET NOTES:

(1) NOT USED.

(2) NOT USED.

(3) NOT USED.

BRC Acoustics & Audiovisual Design

NOT FOR CONSTRUCTION:

THIS DRAWING IS FOR REFERENCE ONLY AND IS NOT CONSIDERED A CONSTRUCTION DRAWING. CONCEPTS AND PLACEMENT OF EQUIPMENT ARE FOR THE PURPOSE OF ESTIMATING AND SPACE PLANNING.

1/30/2018 4:24:40 PM
C:\BRIC Projects\17007 SSD-MS\HS_christie.sterne.rvt

BRIC ARCHITECTURE, INC.
1233 NW NORTHRUP STREET, SUITE 100
PORTLAND, OR 97209 T 503 595 4900

Seaside K-12 Campus

Seaside School District

1801 S. FRANKLIN STREET, SEASIDE, OREGON 97138

t: 503-738-5591

NOT FOR CONSTRUCTION

phase	BP2-PERMIT SET
date	6/15/2018
revisions	
project #	17007

MS / HS GYM
AV SYSTEMS
CEILING PLAN

AV2.2

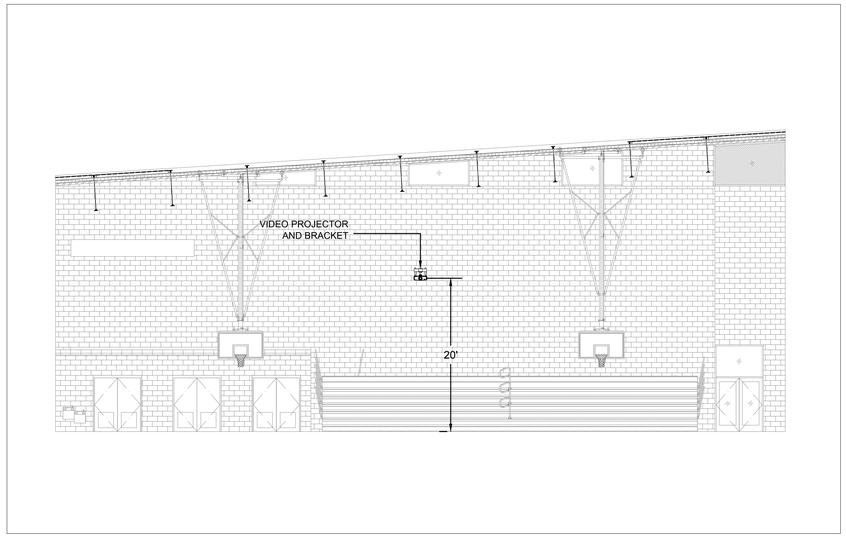

MS MAIN GYM S ELEV AV SYSTEMS (1)
SCALE: NONE

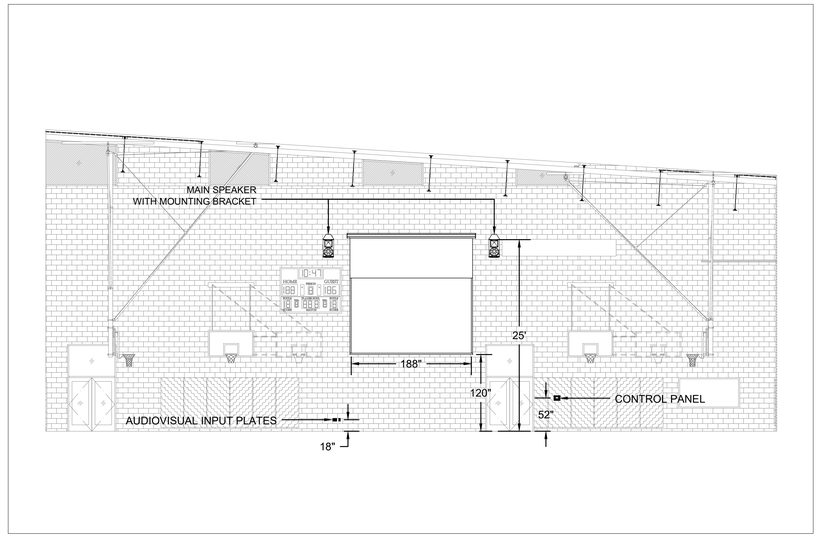

MS MAIN GYM N ELEV AV SYSTEMS (2)
SCALE: NONE

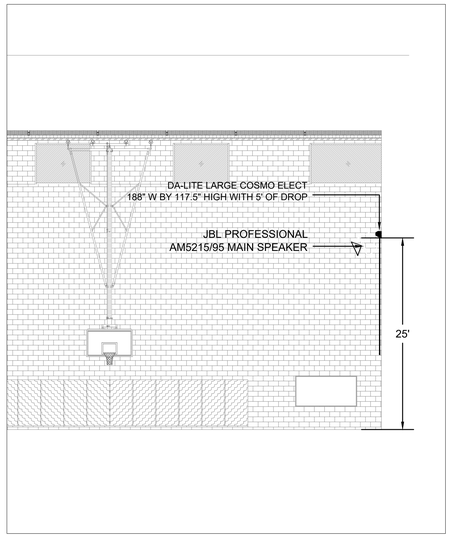

MS MAIN GYM E ELEV AV SYSTEMS (3)
SCALE: NONE

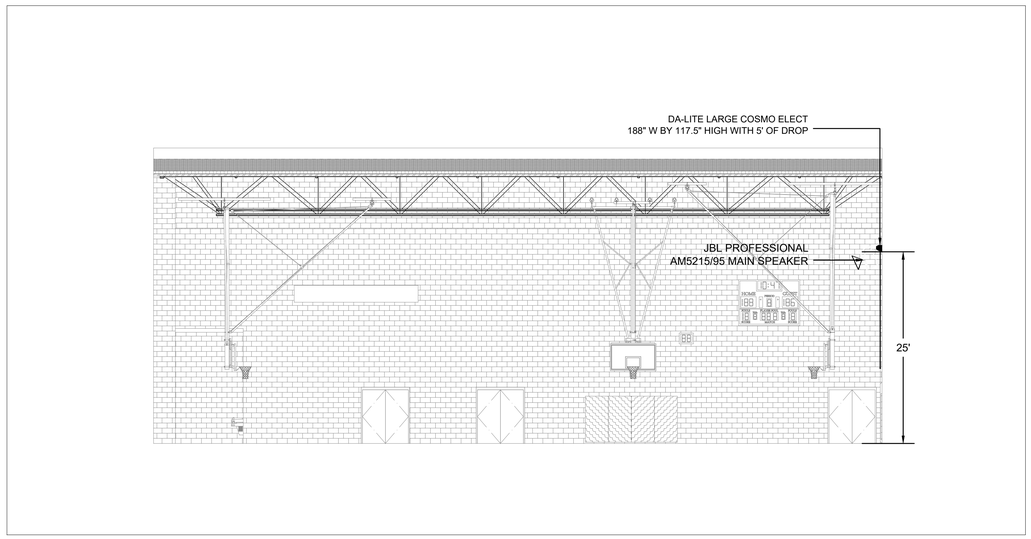

HS MAIN GYM EAST ELEV AV SYSTEMS (4)
SCALE: NONE

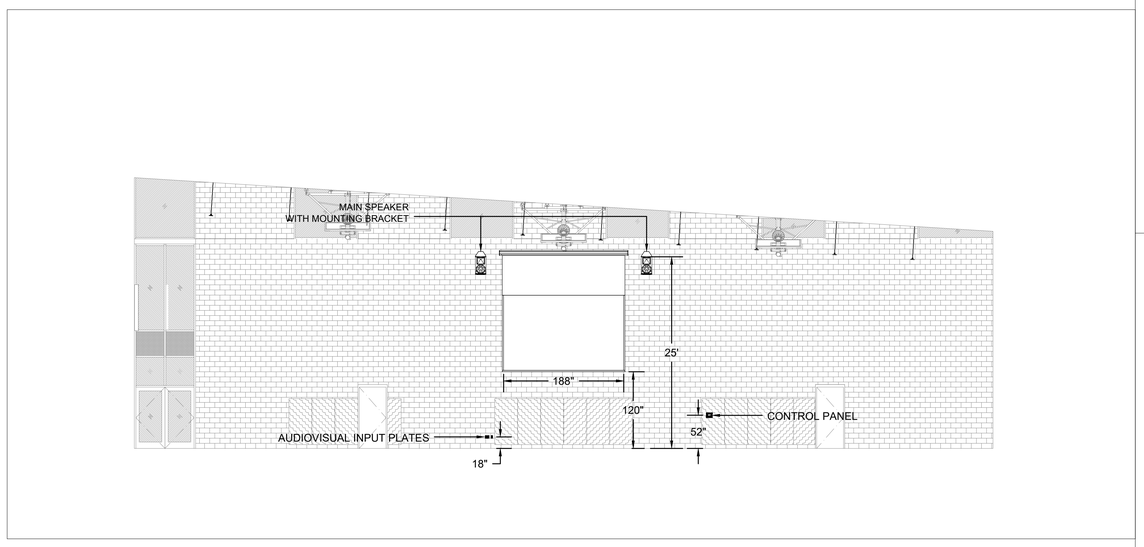

HS MAIN GYM SOUTH ELEV AV SYSTEMS (5)
SCALE: NONE

BRC | Acoustics & Audiovisual Design

NOT FOR CONSTRUCTION:
THIS DRAWING IS FOR REFERENCE ONLY AND IS NOT CONSIDERED A CONSTRUCTION DRAWING. CONCEPTS AND PLACEMENT OF EQUIPMENT ARE FOR THE PURPOSE OF ESTIMATING AND SPACE PLANNING.

1/30/2018 4:24:40 PM
C:\BRIC Projects\17007 SSD-MSHS_christie.sterne.rvt

BR|IC
ARCHITECTURE, INC.
1233 NW NORTHRUP STREET, SUITE 100
PORTLAND, OR 97209 T 503 595 4900

Seaside K-12 Campus
Seaside School District
1801 S. FRANKLIN STREET, SEASIDE, OREGON 97138
t: 503-738-5591

NOT FOR CONSTRUCTION

phase	BP2-PERMIT SET
date	6/15/2018
revisions	
project #	17007

MS / HS GYM
AV SYSTEMS
ELEVATIONS

AV3.1

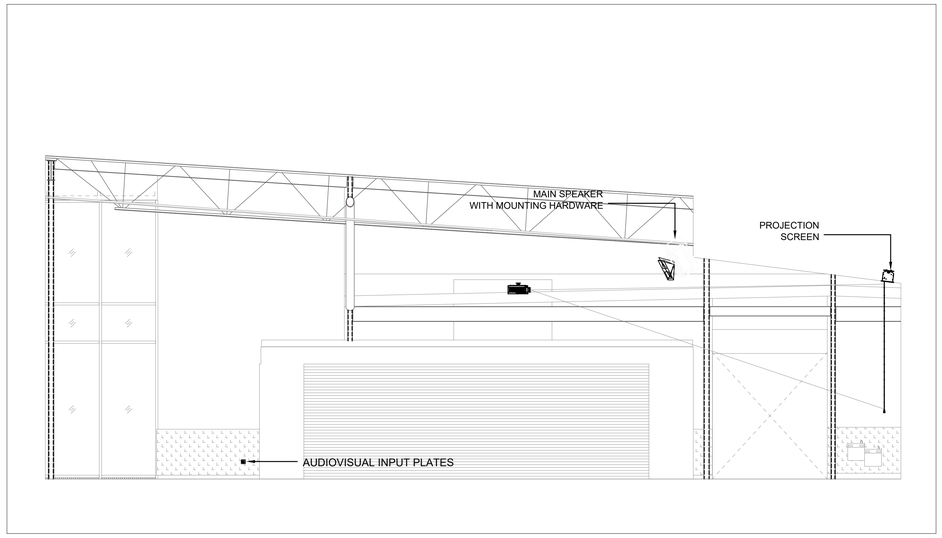

EATING AREA N ELEV AV SYSTEMS (1)

SCALE: NONE

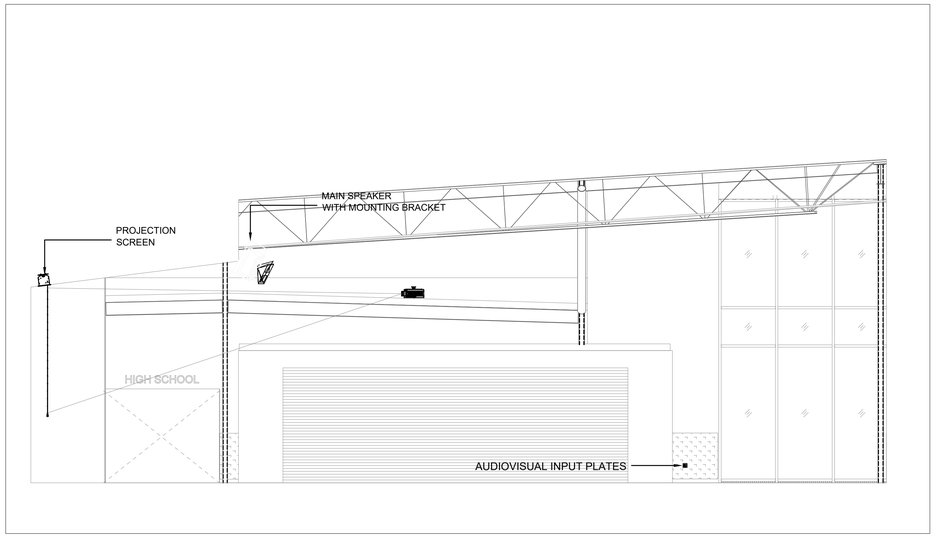

EATING AREA S ELEV AV SYSTEMS (1)

SCALE: NONE

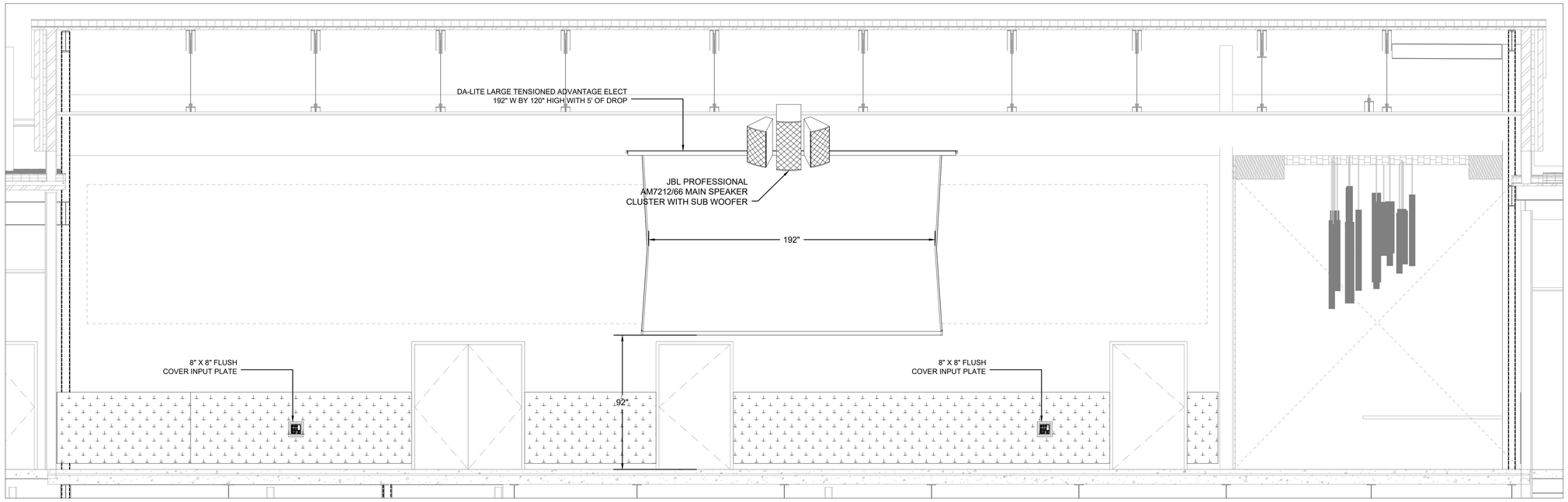

EATING AREA EAST ELEV AV SYSTEMS (1)

SCALE: 3/8" = 1'-0"

BRC| Acoustics & Audiovisual Design

NOT FOR CONSTRUCTION:

THIS DRAWING IS FOR REFERENCE ONLY AND IS NOT CONSIDERED A CONSTRUCTION DRAWING. CONCEPTS AND PLACEMENT OF EQUIPMENT ARE FOR THE PURPOSE OF ESTIMATING AND SPACE PLANNING.

1/30/2018 4:24:40 PM
C:\BRIC Projects\17007 SSD-MSHS_christie.steme.rvt

BR|IC
ARCHITECTURE, INC.
1233 NW NORTHRUP STREET, SUITE 100
PORTLAND, OR 97209 T 503 595 4900

Seaside K-12 Campus

Seaside School District

1801 S. FRANKLIN STREET, SEASIDE, OREGON 97138
t: 503-738-5591

NOT FOR CONSTRUCTION

phase	BP2-PERMIT SET
date	6/15/2018
revisions	
project #	17007

CAFE / STAGE
AV SYSTEMS
ELEVATIONS

AV3.2